EFI EXPRESS

SITE DEVELOPMENT DRAWINGS

TAX MAP 257 LOT 66 · TEBBETTS ROAD

ROCHESTER · NEW HAMPSHIRE · 03867

REVISED OCTOBER 26, 2021

PREPARED FOR

EFI EXPRESS, LLC

C/O MARC SWANSON
61 THOMPSON MILL ROAD
LEE, NH 03861

PREPARED BY

FUSS & O'NEILL

50 COMMERCIAL STREET
MANCHESTER, NEW HAMPSHIRE 03101
603.668.8223
www.fando.com

NEW HAMPSHIRE FISH AND GAME AOT PERMIT CONDITIONS RELATED TO THREATENED AND ENDANGERED SPECIES - PER ENV-WQ 1503.19(H)

- WOOD TURTLES (SPECIES OF SPECIAL CONCERN) OCCUR WITHIN THE VICINITY OF THE PROJECT SITE. SITE OPERATORS SHALL BE INFORMED OF THE POTENTIAL PRESENCE OF THIS SPECIES AND SHALL BE PROVIDED A FLYER THAT HELPS TO IDENTIFY THIS SPECIES ALONG WITH NHFH CONTACT INFORMATION. SEE PLAN SHEET GI-103.
- NO SUMPS SHALL BE INCLUDED IN THE DESIGN OF CATCH BASINS WHEN LOCATED NEAR OR WITHIN GRASSY AREAS AND HOODS ON OUTLET PIPES SHALL BE ELIMINATED FROM THE DESIGN TO AVOID THE ENTRAPMENT OF RARE WILDLIFE.
- ALL MANUFACTURED EROSION AND SEDIMENT CONTROL PRODUCTS, EXCEPT FOR SILT FENCE INSTALLED IN ACCORDANCE WITH ENV-WQ 1506.04, UTILIZED FOR, BUT NOT LIMITED TO, SLOPE PROTECTION, RUNOFF DIVERSION, SLOPE INTERRUPTION, PERIMETER CONTROL, INLET PROTECTION, CHECK DAMS, AND SEDIMENT TRAPS SHALL NOT CONTAIN WELDED PLASTIC, PLASTIC, OR MULTI-FILAMENT OR MONOFILAMENT POLYPROPYLENE NETTING OR MESH. SEE PLAN SHEET(S) CD-508 AND CD-509 FOR SPECS.
- ALL OBSERVATIONS OF THREATENED OR ENDANGERED SPECIES SHALL BE REPORTED IMMEDIATELY TO THE NEW HAMPSHIRE FISH AND GAME DEPARTMENT NONGAME AND ENDANGERED WILDLIFE ENVIRONMENTAL REVIEW PROGRAM BY PHONE AT 603-271-2461 AND BY EMAIL AT NHFGREVIEW@WILDLIFE.NH.GOV. EMAIL SUBJECT LINE: NHB20-2707 EFI TEBBETTS ROAD ROCHESTER, WILDLIFE SPECIES OBSERVATION. PHOTOGRAPHS SHALL BE PROVIDED FOR VERIFICATION AS FEASIBLE.
- THE NEW HAMPSHIRE FISH AND GAME DEPARTMENT SHALL HAVE ACCESS TO THE PROPERTY DURING THE TERM OF THE PERMIT.

ADDITIONAL NHF&G RECOMMENDATIONS:

- WETLAND BIRDS INCLUDING THE MARSH WREN, SORA (SPECIES OF SPECIAL CONCERN), AND PIED-BILLED GREBE (STATE THREATENED) OCCUR WITHIN THE VICINITY OF THE PROJECT SITE. IF BIRDS ARE OBSERVED TO DISPLAY NESTING BEHAVIOR (FOR EXAMPLE: CALLING, SWOOPING, AGITATED/TERRITORIAL BEHAVIOR), OBSERVERS SHOULD CONTACT THE WILDLIFE DIVISION AT 603-271-2461 OR NHFGREVIEW@WILDLIFE.NH.GOV. PROVIDE NHB NUMBER NHB21-0542 AND PROJECT NAME. MIGRATORY BIRD NESTS ARE PROTECTED UNDER NH AND FEDERAL LAWS.

Wood turtle (special concern)

- Sculpted, pyramidal brownish shell
- Orange around neck and limbs
- River/stream turtle spending many months on land

SHEET INDEX

SHEET NO.	SHEET NAME	REVISION DATE
GI-001	COVER SHEET	10/26/2021
GI-101 - GI-103	GENERAL NOTES	10/26/2021
BD-101	BOUNDARY PLAN	-
EX-101	LOT OVERVIEW EXISTING CONDITIONS PLAN	10/26/2021
EX-102	SITE PAD EXISTING CONDITIONS PLAN	10/26/2021
CP-101	SITE PAD DEMOLITION PLAN	10/26/2021
CS-101	SITE PAD SITE PLAN	10/26/2021
CR-101	SITE PAD DRIVEWAY PROFILE PLAN	10/26/2021
CT-101	SITE PAD TRAFFIC - CIRCULATION PLAN	10/26/2021
CT-102	SITE PAD TRAFFIC DRIVEWAY SIGHT-DISTANCE PLAN	10/26/2021
CG-101	SITE PAD GRADING, DRAINAGE, EROSION CONTROL AND WETLAND IMPACT PLAN	10/26/2021
CU-101	SITE PAD UTILITY PLAN	10/26/2021
CU-102	SITE PAD UTILITY LIGHTING PLAN	10/26/2021
CU-103	SITE PAD UTILITY SEPTIC PLAN	10/26/2021
CD-501	CIVIL DETAILS - PAVEMENT & SIDEWALK	10/26/2021
CD-502	CIVIL DETAILS - SIGNAGE & PAVEMENT MARKINGS	10/26/2021
CD-503	CIVIL DETAILS - ELECTRIC, LIGHTING, AND SEWER	10/26/2021
CD-504	CIVIL DETAILS - WATER	10/26/2021
CD-505	CIVIL DETAILS - STORMWATER	10/26/2021
CD-506	CIVIL DETAILS - STORMWATER	10/26/2021
CD-507	CIVIL DETAILS - STORMWATER & TESTPIT DATA	10/26/2021
CD-508	CIVIL DETAILS - EROSION CONTROL	10/26/2021
CD-509	CIVIL DETAILS - EROSION CONTROL	10/26/2021
	ARCHITECTURAL PLANS (22"x34" - BY OTHERS)	

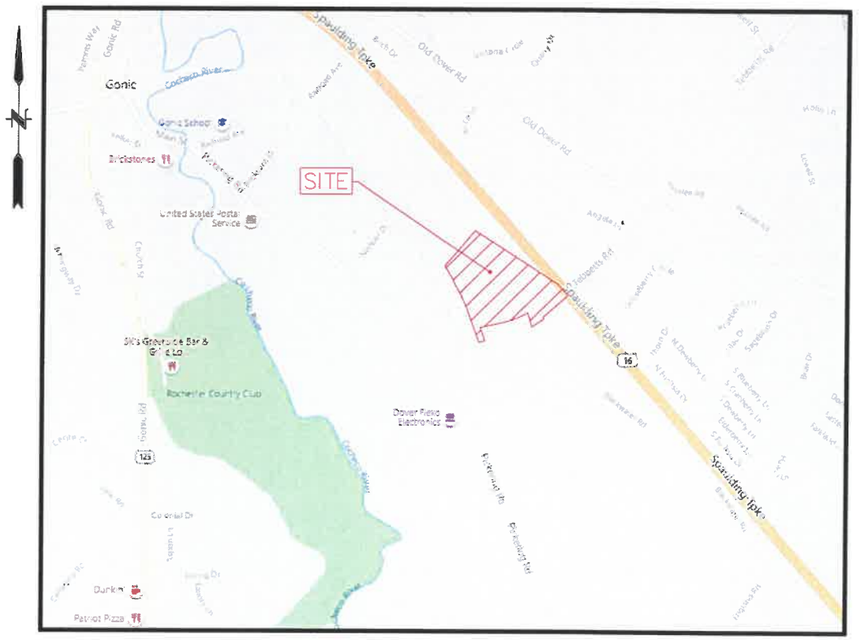

LOCATION MAP

SCALE: 1" = 1000'

APPROVAL OF THE PLANNING BOARD OF ROCHESTER, NH

SIGNATURE	DATE
Shanna B Saunders, Director, Planning & Dev	11/23/21

THE SIGNATURE OF THREE (3) OR MORE OF THE PLANNING BOARD MEMBERS INDICATES APPROVAL OF THIS PLAN

CITY DEPARTMENT REVIEWS

SIGNATURE	DATE
ROCHESTER POLICE DEPARTMENT	
ROCHESTER POLICE DEPARTMENT	
ROCHESTER PUBLIC WORKS DEPARTMENT	

THIS APPLICATION HAS BEEN REVIEWED BY THESE DEPARTMENTS, WHICH HAVE OFFERED COMMENTS TO THE PLANNING BOARD.

REQUIRED APPROVALS

	PERMIT #	DATE APPROVED	EXPIRATION DATE
PLANNING BOARD			
SITE PLAN	CASE# 257-66-1-21	06/07/2021	12/7/2021
WAIVERS			
SECTION 7(F) - SIGNAGE TO BE REVIEWED PRIOR TO INSTALL	-	06/07/2021	12/7/2021
SECTION 10(A) - ALLOW 38 SPACES WHERE 40 ARE REQUIRED	-	06/07/2021	12/7/2021
DPW - REQUIRED TO BE APPROVED PRIOR TO CONSTRUCTION			
STORMWATER	-	-	-
DRIVEWAY	-	-	-
ZONING BOARD			
VARIANCE 275-23.2.A(1)(k) - 1,500SF ACCESSORY/SECURITY APARTMENT 800SF ALLOWED BY ZONING	Z-21-10	05/12/2021	04/20/2023 (2-YEARS FROM SUBMITTAL)
NHDES			
ALTERATION OF TERRAIN (AOT)	AoT-2020	09/23/2021	09/23/2026
WETLAND IMPACT PERMIT	2021-00534	10/25/2021	10/25/2026
SEWAGE DISPOSAL SYSTEM	eCA2021111512	11/15/2021	11/15/2024

STATE OF NEW HAMPSHIRE ADVANCE MPHONSE DUBOIS III No. 11821 10/26/2021 LICENSED PROFESSIONAL ENGINEER

STATE OF NEW HAMPSHIRE BRENDEN M. WALDEN No. 297 3/15/2021 CERTIFIED WETLAND SCIENTIST

STATE OF NEW HAMPSHIRE JAMES P. GOVE No. 006 7/07/2021 LICENSED LAND SURVEYOR

PROJ. No.: 20200646.A10
DATE: JANUARY 2020
GI-001

File Path: J:\DWG\P2020\0646\A10\Civil\Plan\20200646.10_COV_2021-03.dwg, Layout: GI-001, Plotted: Monday, November 15, 2021, User: sdubois Plotter: DWG TO PDF.PC3 CTB File: FO.STB

LEGEND

EXIST PROP

- PROPERTY LINE/RIGHT-OF-WAY
- CENTERLINE
- LIMIT OF DISTURBANCE
- EASEMENT
- BUILDING SETBACK
- STATE HIGHWAY BASELINE
- BASELINE
- ZONING LINE
- EDGE OF WATER
- WETLAND LINE
- WETLAND BUFFER
- WETLAND SYMBOL
- GRAVEL ROAD
- EDGE OF PAVEMENT
- BITUMINOUS CURB
- CONCRETE CURB
- PRECAST CONC. CURB
- VERT. GRAN. CURB
- LIMIT OF CURB TYPE
- SAW CUT
- MATCH LINE (MATCH LINE / SEE SHEET XXX-XX)
- SOLID WHITE LINE
- SOLID YELLOW LINE
- BROKEN WHITE LINE
- BROKEN YELLOW LINE
- SOLID WHITE CHANNELIZING LINE
- SOLID YELLOW CHANNELIZING LINE
- DOUBLE YELLOW LINE
- STOP LINE
- GUARD RAIL
- STOCKADE FENCE
- WIRE FENCE
- CHAIN LINK FENCE
- TREE LINE
- SHRUB LINE
- STONE WALL
- RETAINING WALL
- MINOR CONTOUR
- MAJOR CONTOUR
- TOP of SLOPE
- BOTTOM of SLOPE
- BUILDING
- BOLLARD
- SIGN
- DOUBLE SIGN
- PARKING METER
- PARKING COUNT
- CROSSWALK
- CONC. PAVEMENT
- PAVEMENT
- HANDICAP RAMP
- HANDICAP PARKING
- VAN-ACCESSIBLE HANDICAP PARKING
- TOP & BOTTOM ELEVATION
- SPOT ELEVATION w/LEADER
- SPOT ELEVATION
- SOIL BORING
- MONITORING WELL
- TEST PIT LOCATION
- IRON PIPE
- DRILL HOLE
- IRON PIN
- MONUMENT
- MAIL BOX
- CONTROL POINT
- SILT FENCE
- HAYBALES

ABBREVIATIONS

GENERAL

APRX.	APPROXIMATE	PCC	PRE CAST CONCRETE CURB
BIT.	BITUMINOUS	PROP	PROPOSED
BW	BOTTOM OF WALL	REM	REMOVE
CC	CONCRETE CURB	R&D	REMOVE AND DISPOSE
BCC	CAPE CODE BERM	R&R	REMOVE AND RESET
CONC.	CONCRETE	R&S	REMOVE AND STACK
ELEV	ELEVATION	TOS	TOP OF SLOPE
EXIST	EXISTING	TW	TOP OF WALL
GC	GRANITE CURB	TYP	TYPICAL
MAX	MAXIMUM	VGC	VERTICAL GRANITE CURB
MIN	MINIMUM		
NTS	NOT TO SCALE		

UTILITY

CB	CATCH BASIN	INV	INVERT ELEVATION
CMP	CORRUGATED METAL PIPE	PVC	POLYVINYL CHLORIDE PIPE
CPP	CORRUGATED POLYETHYLENE PIPE	RCP	REINFORCED CONCRETE PIPE
DCB	DOUBLE CATCH BASIN	RD	ROOF DRAIN
DI	DUCTILE IRON PIPE	SMH	SEWER MANHOLE
F&G	FRAME AND GRATE	TSV	TAPPING SLEEVE, VALVE AND BOX
F&C	FRAME AND COVER	UP	UTILITY POLE
HDPE	HIGH DENSITY POLYETHYLENE PIPE		
HYD	HYDRANT		

LEGEND (CONT.)

- D — STORM DRAINAGE PIPE
- U — UNDERDRAIN
- S — SANITARY SEWER PIPE
- OHW — OVERHEAD WIRES
- W — WATER MAIN
- G — UNDERGROUND GAS
- UGETC — UNDERGROUND ELECTRIC, TELEPHONE, AND CABLE

EXIST PROP

- RIPRAP
- SANITARY MANHOLE
- STORM MANHOLE
- ELECTRIC MANHOLE
- TELEPHONE MANHOLE
- CATCH BASIN
- DOUBLE CATCHBASIN
- WATER VALVE
- FIRE HYDRANT
- UTILITY POLE
- BOLLARD/POST
- SIGN
- GAS GATE
- LIGHTPOLE
- FLARED END
- DECIDUOUS TREE

REFERENCE PLANS AND NOTES:

1. "PARTIAL BOUNDARY; LAND OF EFI EXPRESS;TAX MAP 0257-0066, TEBBETTS ROAD ROCHESTER, NEW HAMPSHIRE, STRAFFORD COUNTY" CREATED BY THIS OFFICE, ON RECORD AT THE CITY OF ROCHESTER PLANNING DEPARTMENT. INCLUDED IN THIS PLAN SET.

REGULATORY REQUIREMENTS

1. PROVIDE TRAFFIC SIGNAGE AND PAVEMENT MARKINGS IN CONFORMANCE WITH THE LATEST EDITION OF THE MANUAL OF UNIFORM TRAFFIC CONTROL DEVICES.
2. CONTRACTOR TO COORDINATE AND CREATE A TRAFFIC CONTROL PLAN FOR REVIEW AND APPROVAL WITH CITY AND/OR NHDOT PRIOR TO START OF CONSTRUCTION, IF REQUIRED.
3. THE CONTRACTOR SHALL BE RESPONSIBLE FOR SITE SECURITY AND JOB SAFETY. ALL CONSTRUCTION ACTIVITIES SHALL BE PERFORMED IN ACCORDANCE WITH THE LATEST OSHA STANDARDS, STATE AND LOCAL REQUIREMENTS, AND CITY OF ROCHESTER REQUIREMENTS, POLICIES, AND SPECIFICATIONS.

EROSION AND SEDIMENT CONTROL

1. INSTALL EROSION CONTROL MEASURES PRIOR TO STARTING ANY WORK ON THE SITE.
2. IMPLEMENT ALL NECESSARY MEASURES REQUIRED TO CONTROL STORMWATER RUNOFF, DUST, SEDIMENT, AND DEBRIS FROM EXITING THE SITE. PERFORM CORRECTIVE ACTION AS NEEDED FOR EROSION CLEANUP AND REPAIRS TO OFF SITE AREAS, IF ANY, AT NO COST TO OWNER.
3. INSPECT AND MAINTAIN EROSION CONTROL MEASURES PER TYPICAL STANDARDS. DISPOSE OF SEDIMENT IN AN UPLAND AREA. DO NOT ENCUMBER OTHER DRAINAGE STRUCTURES AND PROTECTED AREAS.
4. PERFORM CONSTRUCTION SEQUENCING IN SUCH A MANNER TO CONTROL EROSION AND TO MINIMIZE THE TIME THAT EARTH MATERIALS ARE EXPOSED BEFORE THEY ARE COVERED, SEEDED, OR OTHERWISE STABILIZED.
5. UPON COMPLETION OF CONSTRUCTION AND ESTABLISHMENT OF PERMANENT GROUND COVER, REMOVE AND DISPOSE OF TEMPORARY EROSION CONTROL MEASURES. CLEAN SEDIMENT AND DEBRIS FROM TEMPORARY MEASURES AND FROM PERMANENT STORM DRAIN

NHDES INVASIVE SPECIES NOTES

1. IF INVASIVE SPECIES ARE ENCOUNTERED ON SITE AND SHOULD BE REMOVED ACCORDING TO NHDES REQUIREMENTS.
2. THE CONTRACTOR SHALL TAKE STEPS TO PREVENT THE SPREAD OF INVASIVE PLANT, INSECT, AND FUNGAL SPECIES BY MEETING THE REQUIREMENTS AND INTENT OF RSA 430:53 AND AGR 3800 RELATIVE TO INVASIVE SPECIES. HTTP://GENCOURT.STATE.NH.US/RULES/STATE_AGENCIES/AGR3800.HTML

NPDES NOTES:

1. THIS PROJECT DISTURBS 110,000±SF (2.5± AC) OF LAND WHICH EXCEEDS THE NPDES THRESHOLD AMOUNT OF 43,560 SF (1 AC). THEREFORE, THE PROJECT WILL BE REQUIRED TO OBTAIN NATIONAL POLLUTANT DISCHARGE ELIMINATION SYSTEM (NPDES) PERMIT COVERAGE AS ISSUED BY THE UNITED STATES ENVIRONMENTAL PROTECTION AGENCY (EPA). THE OWNER/DEVELOPER AND "OPERATOR" (GENERAL CONTRACTOR) SHALL BE REQUIRED TO PREPARE AND SUBMIT A NOTICE OF INTENT (NOI) TO THE EPA PRIOR TO THE START OF CONSTRUCTION AND SHALL BE RESPONSIBLE FOR THE PREPARATION AND IMPLEMENTATION OF A STORM WATER POLLUTION PREVENTION PLAN (SWPPP) MEETING THE REQUIREMENTS OF THE CURRENT NPDES PERMIT.
2. A COPY OF THE NOI AND SWPPP SHALL BE PROVIDED TO THE CITY PLANNING DEPT. AND/OR DPW.

NHDES AOT NOTES:

1. DURING CONSTRUCTION, THE CONTRACTOR SHALL BE RESPONSIBLE FOR MAINTAINING ALL EROSION AND SEDIMENT CONTROL DEVICES AS SHOWN IN THE PLANS THROUGHOUT THE DURATION OF THE PROJECT IN ACCORDANCE WITH APPLICABLE NHDES STANDARDS.
2. A CONDITION OF THE ALTERATION OF TERRAIN PERMIT ISSUED, REQUIRES ENVIRONMENTAL MONITORING TO OCCUR. IT SHALL BE THE OWNER AND/OR CONTRACTOR'S RESPONSIBILITY TO ACQUIRE NHDES APPROVED ENVIRONMENTAL MONITORING DURING CONSTRUCTION, FOR WEEKLY MONITORING AND REPORTING.
3. ENV-WQ REQUIRES THAT THE PERMIT HOLDER AND A QUALIFIED ENGINEER MUST SUBMIT A CERTIFICATION INDICATING THAT THE PROJECT WAS COMPLETED IN ACCORDANCE WITH THE APPROVED PLANS AND SPECIFICATIONS, OR THAT DEVIATIONS WERE MADE THAT DID NOT REQUIRE AN AMENDED PERMIT OR NEW PERMIT.
4. POST CONSTRUCTION, THE PROPERTY OWNER/OPERATOR SHALL SHALL BE RESPONSIBLE FOR MAINTAINING ALL DRAINAGE AND STORMWATER PRACTICES. REFER TO THE ALTERATION OF TERRAIN/DRAINAGE CALCULATIONS FOR THE OPERATION AND MAINTENANCE MANUAL.
5. SALT SHALL BE APPLIED BY A GREEN SNOW PRO CERTIFIED CONTRACTOR. REFER TO THE INSPECTION AND MAINTENANCE MANUAL FOR THE WINTER MAINTENANCE AND SALT MINIMIZATION PLAN WITH ASSOCIATED INFORMATION.
6. THIS PROJECT IS LIMITED TO A LAND DISTURBANCE 110,000±SF (2.5± AC) AS ILLUSTRATED WITHIN THIS PLAN SET, AND AS NOTED WITHIN THE AOT PERMIT. REFER TO THE AOT PERMIT FOR ADDITIONAL CONDITIONS OF APPROVAL, APPROVAL NUMBER IS LISTED UPON THE COVER SHEET GI-001.

NHDES SOURCE CONTROL PLAN REQUIREMENTS:

1. THIS PROJECT DOES NOT MEET THE CURRENT DEFINITION OF A "HIGH LOAD AREA" PER ENV-WQ 1502.30:
2. THERE WILL BE NO EXPOSURE OF REGULATED SUBSTANCES TO PRECIPITATION OR RUNOFF AND NO RELEASE OF REGULATED SUBSTANCES FROM ANY PORTION OF THE SITE:
   - 2.1. ANY LAND USE OR ACTIVITY IN WHICH REGULATED SUBSTANCES ARE EXPOSED TO RAINFALL OR RUNOFF WITH THE EXCEPTION OF AREAS WHERE THE ONLY REGULATED SUBSTANCE EXPOSED TO RAINFALL OR RUNOFF IS ROAD SALT THAT HAS BEEN APPLIED FOR DEICING OF PAVEMENT ON THE SITE;
   - 2.2. THERE SHALL BE NO VEHICLE MAINTENANCE OR RELATED OUTDOOR ACTIVITIES THAT INVOLVE THE TRANSFER, STORAGE OF REGULATED OR HAZARDOUS SUBSTANCES INCLUDING THE USE OF PETROLEUM, COOLANT OR OTHER AUTO PRODUCTS/WASTES OUTSIDE THE BUILDING ENVELOPE OR A SOURCE PROTECTION PLAN FROM NHDES WILL BE REQUIRED. NO FLOOR DRAINS ARE PERMITTED IN NH WHEN A REGULATED CONTAMINANT OR REGULATED SUBSTANCE, AS DEFINED UNDER NHDES REGULATIONS, IS ALLOWED TO BE DISCHARGED TO THE GROUND. COLLECTION AND CONTAINMENT TO A HOLDING TANK IS PERMITTED AND REQUIRES CITY/STATE PERMITS PRIOR TO INSTALL.
   - 2.3. BULK REGULATED PRODUCTS WILL NOT DRAIN TO FLOOR DRAINS THAT DISCHARGE TO THE GROUND OR EXCEED 1,320 GALLONS ONSITE, TO MAINTAIN AN AMOUNT UNDER THE ABOVE STORAGE TANK THRESHOLD. THE USE OF 5 GALLON CONTAINERS WITH POTENTIALLY 55 GALLON DRUMS ARE PROPOSED ONSITE. ALL REGULATED SUBSTANCES STORED IN REGULATED CONTAINERS WITHIN STRUCTURES OR OUTDOORS WILL CONFORM TO ENV-WQ 401, BEST MANAGEMENT PRACTICES FOR GROUNDWATER PROTECTION
3. A SPILL PREVENTION PLAN IS TO BE COORDINATED WITH THE CITY IN ADDITION TO A SPILL PREVENTION KIT REQUIRED ON SITE.

STORMWATER BASIN MAINTENANCE NOTES:

1. EMBANKMENT - THE EMBANKMENT SHOULD BE INSPECTED ANNUALLY TO DETERMINE IF RODENT BURROWS, WET AREAS, OR EROSION OF THE FILL IS TAKING PLACE.
2. VEGETATION - THE VEGETATED AREAS OF THE STRUCTURE SHOULD BE PROTECTED FROM DAMAGE BY FIRE, GRAZING, TRAFFIC, AND DENSE WEED GROWTH. LIME AND FERTILIZER SHOULD BE APPLIED AS NECESSARY AS DETERMINED BY SOIL TESTS. TREES AND SHRUBS SHOULD BE KEPT OFF THE EMBANKMENT AND EMERGENCY SPILLWAY AREAS.
3. SPILLWAY STRUCTURES SHOULD BE INSPECTED ANNUALLY AND AFTER EVERY MAJOR STORM. ACCUMULATED DEBRIS AND SEDIMENT SHOULD BE REMOVED.
4. OUTLETS - PIPE OUTLETS SHOULD BE INSPECTED ANNUALLY AND AFTER EVERY MAJOR STORM. THE CONDITION OF THE PIPES SHOULD BE NOTED AND REPAIRS MADE AS NECESSARY. IF EROSION IS TAKING PLACE THEN MEASURES SHOULD BE TAKEN TO STABILIZE AND PROTECT THE AFFECTED AREA OF THE OUTLET.
5. SEDIMENT - SEDIMENT SHOULD BE CONTINUALLY CHECKED IN THE BASIN. WHEN SEDIMENT ACCUMULATIONS REACH THE PREDETERMINED DESIGN ELEVATION, THEN THE SEDIMENT SHOULD BE REMOVED AND PROPERLY DISPOSED OF.
6. SAFETY INSPECTIONS - ALL PERMANENT IMPOUNDMENTS SHOULD BE INSPECTED BY A QUALIFIED PROFESSIONAL.
7. REFER TO THE INSPECTION AND MAINTENANCE MANUAL, LOCATED WITHIN THE ALTERATION OF TERRAIN STORMWATER MANAGEMENT REPORT.

DRAINAGE MAINTENANCE NOTES

PIPES

STEP 1 - CLEAN OUT PIPE USING THE JETVAC PROCESS

- A. A FIXED CULVERT CLEANING NOZZLE WITH REAR FACING SPREAD OF 45° OR MORE IS PREFERRED
- B. APPLY MULTIPLE PASSES OF JETVAC UNTIL BACKFLUSH WATER IS CLEAN
- C. VACUUM STRUCTURE SUMP AS REQUIRED

STEP 2 - REPLACE ALL COVERS, GRATES, FILTERS, AND LIDS; RECORD OBSERVATIONS AND ACTIONS.

STEP 3 - INSPECT AND CLEAN BASINS AND MANHOLES

CATCH BASINS & PIPES

- a. INSPECT CATCH BASINS EVERY 6 MONTHS DURING THE FIRST YEAR OF OPERATION. ADJUST THE INSPECTION INTERVAL BASED ON PREVIOUS OBSERVATIONS OF SEDIMENT ACCUMULATION AND HIGH WATER ELEVATIONS.
- b. CONDUCT JETTING AND VACTORING ANNUALLY OR WHEN INSPECTION SHOWS THAT MAINTENANCE IS NECESSARY.

GENERAL PLAN NOTES:

1. SYMBOLS AND LEGENDS OF PROJECT FEATURES ARE GRAPHIC REPRESENTATIONS AND ARE NOT NECESSARILY SHOWN ON THE DRAWINGS TO SCALE OR TO THEIR ACTUAL DIMENSION OR LOCATION. COORDINATE DETAIL SHEET DIMENSIONS, MANUFACTURERS' LITERATURE, SHOP DRAWINGS AND FIELD MEASUREMENTS OF SUPPLIED PRODUCTS FOR LAYOUT OF THE PROJECT FEATURES.
2. DO NOT RELY SOLELY ON ELECTRONIC VERSIONS OF DRAWINGS, SPECIFICATIONS, AND DATA FILES THAT ARE PROVIDED BY THE ENGINEER. FIELD VERIFY LOCATION OF PROJECT FEATURES.
3. SITE WORK SHALL BE CONSTRUCTED FROM A COMPLETE SET OF PLANS, NOT ALL FEATURES ARE DETAILED ON EVERY PLAN. THE ENGINEER IS TO BE NOTIFIED OF ANY CONFLICT WITHIN THIS PLAN SET. ALL PLAN SHEETS WILL BE ON FILE AT THE CITY OF ROCHESTER. SEE OTHER PLAN SHEETS FOR RELATED NOTES AND ASSOCIATED INFORMATION.
4. FOR MORE INFORMATION ABOUT THIS SITE PLAN CONTACT DESIGN ENGINEERS, CONTACT INFORMATION IS ON THE COVER SHEET.

DEMOLITION PLAN NOTES:

1. THE PURPOSE OF THIS PLAN IS TO ILLUSTRATE AREAS AND LOCATIONS OF DEMOLITION ON THE SUBJECT PARCEL.
2. REMOVE AND DISPOSE OF EXISTING STUMPS AND UNSUITABLE MATERIAL IN ACCORDANCE WITH APPLICABLE NHDES STANDARDS.
3. REMOVE AND DISPOSE OF EXISTING UTILITIES, FOUNDATIONS, AND OTHER DEMOLITION DEBRIS IN ACCORDANCE WITH APPLICABLE FEDERAL, STATE AND LOCAL REGULATIONS, ORDINANCES AND STATUTES.
4. NO CHANGES ARE PROPOSED OUTSIDE OF THE VISIBLE CONTENT PRESENTED ON THIS PLAN. SEE EXISTING CONDITIONS PLAN SHEET FOR AN OVERVIEW OF THE PROJECT AREA.
5. ANY BUILDING TO BE REMOVED FROM THE SITE MUST HAVE A DEMOLITION PERMIT.
6. SEE OTHER PLAN SHEETS FOR RELATED NOTES AND ASSOCIATED INFORMATION.

PROPOSED DRAINAGE SCHEDULE

DRAINAGE PIPE TABLE

FROM	INV OUT	TO	INV IN	L (FT)	SLOPE	DIA.	TYPE
FES33	190.20	FES32	186.00	45	0.093	30"	CMP
CB11	191.60	FES16	191.50	23	0.004	12"	HDPE
CB12	191.80	CB11	191.70	20	0.005	12"	HDPE
CB13	189.70	CB14	189.60	20	0.005	12"	HDPE
CB14	189.50	FES15	189.45	11	0.005	12"	HDPE
CB21	192.65	CB23	192.15	101	0.005	12"	HDPE
CB22	192.65	CB23	192.15	99	0.005	12"	HDPE
CB23	191.65	CB26	191.10	63	0.009	18"	HDPE
CB25	191.75	CB26	191.60	27	0.005	12"	HDPE
CB26	191.00	FES25	190.00	61	0.016	18"	HDPE
DMH30	190.80	FES31	188.05	67	0.071	12"	HDPE

DRAINAGE STRUCTURE TABLE

STRUCTURE	RIM	DIA.
CB11	196.9	4
CB12	196.8	4
CB13	193.7	4
CB14	193.7	4
CB21	196.6	4
CB22	196.6	4
CB23	196.6	4
CB25	195.8	4
CB26	195.3	4
DMH30	190.0	N/A
FES15	191.5	N/A
FES16	190.0	N/A
FES25	190.6	N/A
FES31	190.2	N/A
FES32	186.0	N/A
FES33	192.1	N/A

DRAINAGE SCHEDULE NOTES:

1. DESIGNED WITH A MINIMUM 3' OVER OVER ALL DRAINAGE LINES.
2. REFER TO DETAILS SHEET FOR STRUCTURE AND PIPE RUN DETAILS.

PROPOSED SEWER SCHEDULE

PROPOSED STRUCTURES:

BUILDING#1
FF=197.65
INV. OUT (6" PVC) = 191.80
L =70', 6" PVC, S = 0.020

BUILDING#2
FF=197.65
INV. OUT (6" PVC) = 191.80
L =95', 6" PVC, S = 0.027

CONN#3
ELEV=197.65
INV. OUT (6" PVC) = 191.80
L =23', 6" PVC, S = 0.083

SEPTIC TANK - 3,000 GALLON
RIM = 197.0±
INV. IN (6" PVC) = 188.25 (ALL INVERTS)
INV. OUT (6" PVC) = 188.00 (TO LEACHFIELD)
SEE SEPTIC PLAN CU-103 FOR MORE INFORMATION

SEWER SCHEDULE NOTES:

1. SEE DETAIL SHEET CU-103 FOR ADDITIONAL SYSTEM DESIGN INFORMATION
2. MINIMUM 6.0' COVER OVER ALL SEWER LINES AND SEWER SERVICES.
3. IN AREAS WITH LESS THAN 6' COVER, INSTALL 2" THICK X 5' WIDE BLUEBOARD INSULATION ABOVE SEWER LINE.
4. REFER TO DETAILS SHEET FOR STRUCTURE AND PIPE RUN DETAILS.
5. INSTALL CLEANOUTS AT ALL BENDS AND A MAXIMUM OF EVERY 75'.

PROPOSED SEWER FLOWS

PER TABLE 1008-1 OF ENV-WQ 1000

FACTORIES/WAREHOUSE (10 GPD PER EMPLOYEE)	= 4 EMPLOYEES NOW, 10 IN FUTURE	= 100 GALLONS PER DAY
TRANSIENTS (5GPD/TRANSIENT)	= UP TO 10 TRANSIENTS PER DAY	= 50 GALLONS PER DAY
2BR ACCESSORY/SECURITY APARTMENT		= 300 GALLONS PER DAY
RECREATIONAL CAMPGROUND WITH 3-WAY HOOKUP (60GPD/SITE) = TWO (2) SITES		= 120 GALLONS PER DAY

TOTAL ESTIMATE FLOW = 570 GALLONS PER DAY
DESIGN FOR MINIMUM OF 600 GALLONS PER DAY

No.	DATE	DESCRIPTION	DESIGNER	REVIEWER
5.	10/26/2021	REVS PER NHDES	ACD	BAP
4.	09/21/2021	REVS PER NHF&G AND WETLANDS	ACD	BAP
3.	07/20/2021	REVS PER CITY, DES WETLANDS, AND F&G	ACD	BAP
2.	05/05/2021	REVS PER CITY TRG, PB, AOT,& WETLANDS	ACD	BAP
1.	03/15/2021	REVS PER CITY TRG COMMENTS	ACD	BAP

SCALE:
HORZ.:
VERT.:
DATUM:
HORZ.: NAD83 - NH83
VERT.: NAVD88
0
GRAPHIC SCALE

FUSS & O'NEILL
50 COMMERCIAL STREET
MANCHESTER, NEW HAMPSHIRE 03101
603.668.8223
www.fando.com

EFI EXPRESS
GENERAL NOTES PLAN
TAX MAP 257 LOT 66
0 TEBBETTS ROAD
ROCHESTER NEW HAMPSHIRE

PROJ. No.: 20200646.A10
DATE: JANUARY 2021

GI-101

File Path: J:\DWG\P2020\0646\A10\Civil\Plan\20200646.10_COV_2021-03.dwg Layout: GI-101 Plotted: Mon, November 15, 2021 - 1:33 PM User: adubois
Plotter: DWG TO PDF.PC3 CTB File: FO.STB
MS VIEW:
LAYER STATE:

EXISTING CONDITIONS NOTES:

1. THE PURPOSE OF THIS PLAN IS TO DEPICT EXISTING CONDITIONS OF THE SUBJECT PARCEL LOCATED ON TAX MAP 257 LOT 66, WITH A PHYSICAL ADDRESS OF TIBBETTS ROAD, ROCHESTER, NH. DEED REFERENCE AT THE SCRD IS BOOK 4790 PAGE 951.
2. OWNER OF RECORD IS EFI EXPRESS, LLC. WITH A LEGAL ADDRESS OF 61 THOMPSON MILL ROAD, LEE, NH 03861.
3. PROPERTY LINE/BOUNDARY LINE INFORMATION IS BASED ON REFERENCE PLAN 1. ACTUAL FIELD SURVEY WAS PERFORMED ON THE GROUND BY THIS OFFICE BETWEEN OCTOBER AND NOVEMBER OF 2020.
4. HORIZONTAL DATUM IS NH STATE GRID/CITY OF ROCHESTER GIS NAD83/92. VERTICAL DATUM IS NAVD88.
5. EXISTING CONDITIONS AND TOPOGRAPHY IS BASED ON A COMBINATION OF ACTUAL GROUND SURVEY FROM REFERENCE PLAN #1 COLLECTED BETWEEN OCTOBER AND NOVEMBER OF 2020, AERIAL SURVEY, CITY OF ROCHESTER GIS MAPPING, AND ONLINE NOAA CONTOURS. OFFSITE INFORMATION OF RESIDENCES WAS SUPPLEMENTED WITH AXIS GIS APPRAISAL AND CITY OF ROCHESTER GIS INFORMATION. F&O DID NOT PERFORM FULL GROUND SURVEY. NO REPRESENTATION OR WARRANTY IS MADE AS TO NON-SURVEY FEATURES OF REFERENCE BY F&O.
6. PER THE CURRENT CITY OF ROCHESTER ZONING ORDINANCE; THE SUBJECT PROPERTY IS ZONED GENERAL INDUSTRIAL (GI) DISTRICT ALONG WITH ABUTTING PROPERTIES TO THE NORTHWEST. PROPERTIES TO THE SOUTH AND SOUTHEAST ARE ZONED AGRICULTURAL DISTRICT, AND PROPERTIES OPPOSITE OF NH ROUTE 16 ARE ZONED RESIDENTIAL. ZONING REQUIREMENTS FOR THE GI ZONING DISTRICT ARE AS FOLLOWS:

	REQUIRED:	EXISTING LOT:
MIN. LOT SIZE	40,000 SF	28.6±AC (PER TAX CARD
MIN. LOT FRONTAGE	100'	580'±
MIN. FRONT SETBACK	25'	N/A
MIN. SIDE SETBACK	20'	N/A
MIN. REAR SETBACK	25'	N/A
MIN. BUILDING SETBACK TO RESIDENTIAL LOT	100'	N/A
MAX. LOT COVERAGE	75%	N/A
MAX. BUILDING HEIGHT	55'	N/A

7. MINIMUM LOT AREA CALCULATION:
   "MINIMUM LOT AREA" DOES NOT INCLUDE VERY POORLY DRAINED (GROUP 6) SOILS.
   "USABLE AREA" IS DEFINED AS A 3,000 SF RECTANGLE (MIN 30' WIDTH) THAT CAN BE FIT INSIDE THE LOT; NOT TO ENCOMPASS SETBACKS, WETLANDS, WETLAND BUFFERS, OR SLOPES GREATER THAN 25%.

   TOTAL LOT AREA = 28.6±ACRES (PER TAX CARD)
   A FULL BOUNDARY WAS NOT PERFORMED FOR THIS SUBMITTAL, ONLY A PARTIAL BOUNDARY WAS PREPARED ILLUSTRATING THE UPLAND AREA TO BE UTILIZED FOR DEVELOPMENT.

   PLAN SHEET CP-101 ILLUSTRATES A 28,000SF (200'W X 140'H) "USABLE AREA" RECTANGLE THAT FITS INSIDE THE LOT AND DOES NOT ENCOMPASS SETBACKS, WETLANDS, WETLAND BUFFERS, OR SLOPES GREATER THAN 25%.

8. ONSITE WETLANDS WERE DELINEATED BY GOVE ENVIRONMENTAL SERVICES, INC. ON SEPTEMBER 15, 2020. WETLANDS WERE DELINEATED UTILIZING THE FOLLOWING STANDARDS:
   - 8.1. US ARMY CORPS OF ENGINEERS REGIONAL SUPPLEMENT TO THE CORPS OF ENGINEERS WETLAND DELINEATION MANUAL: NORTHCENTRAL AND NORTHEAST REGION, TECHNICAL REPORT ERDC/EL TR-12-1 (JANUARY 2012).
   - 8.2. FIELD INDICATORS FOR IDENTIFYING HYDRIC SOILS IN NEW ENGLAND - VERSION 4, JUNE 2020. NEW ENGLAND HYDRIC SOILS TECHNICAL COMMITTEE.
   - 8.3. US ARMY CORPS OF ENGINEERS NATIONAL WETLAND PLANT LIST, 2018.
   - 8.4. CLASSIFICATION OF WETLANDS AND DEEPWATER HABITATS OF THE UNITED STATES. USFW MANUAL FWS/OBS-79/31 (1979).
9. THIS PROPERTY IS NOT CURRENTLY SERVICED BY PRIVATE OR PUBLIC UTILITIES.
10. THE SUBJECT PARCEL OF LAND IS LOCATED IN ZONE X AS SHOWN ON FEMA FLOOD INSURANCE RATE MAP(S) FIRM 33017C0214D, EFFECTIVE DATE: MAY 17, 2005. FLOOD ZONE X IS NOT A SPECIAL FLOOD HAZARD AREA, AND DETERMINED TO BE OUTSIDE OF THE 0.2% ANNUAL CHANCE FLOODPLAIN.
11. IT SHALL BE THE CONTRACTOR'S RESPONSIBILITY TO FAMILIARIZE THEMSELVES WITH THE SITE AND EXISTING CONDITIONS SURROUNDING IT AND THEREON.
12. IT SHALL BE THE CONTRACTOR'S RESPONSIBILITY TO CONFIRM THE LOCATION OF EXISTING FEATURES BOTH ABOVE GROUND AND BELOW, NO GUARANTEE IS MADE BY THIS OFFICE OR INDIVIDUALS OF LOCATION OF EXISTING FEATURES. UNDERGROUND UTILITIES ARE APPROXIMATE BASED ON REFERENCES LOCATED ON THE BOUNDARY PLAN.
13. THE CONTRACTOR SHALL BE RESPONSIBLE FOR VERIFYING AND DETERMINING THE LOCATION, SIZE AND ELEVATION OF ALL EXISTING UTILITIES SHOWN ON THESE PLANS PRIOR TO THE START OF ANY CONSTRUCTION. THE ENGINEER SHALL BE NOTIFIED IN WRITING OF ANY UTILITIES FOUND INTERFERING WITH THE PROPOSED CONSTRUCTION AND APPROPRIATE REMEDIAL ACTION BE AGREED TO BY THE ENGINEER BEFORE PROCEEDING WITH THE WORK. THE CONTRACTOR SHALL BE RESPONSIBLE TO CONTACT NEW HAMPSHIRE DIG SAFE, AT 1-888-DIG-SAFE, AT LEAST 72 HOURS BEFORE DIGGING.
14. IF ANY ERROR OR OMISSION IN THESE PLANS IS DISCOVERED BY THE CONTRACTOR, THE CONTRACTOR SHALL CONTACT THE ENGINEER OF RECORD IMMEDIATELY IN WRITING FOR DIRECTION ON HOW TO PROCEED. THE CONTRACTOR SHALL DISCONTINUE WORK IN THE AFFECTED PROJECT AREA UNTIL AGREEMENT HAS BEEN REACHED WITH THIS FIRM ON CORRECTIVE ACTION.
15. SEE DETAIL SHEET CD-507 FOR TEST PIT DATA.
16. IF ANY ERROR OR OMISSION IN THESE PLANS IS DISCOVERED BY THE CONTRACTOR, THE CONTRACTOR SHALL CONTACT THE ENGINEER OF RECORD IMMEDIATELY IN WRITING FOR DIRECTION ON HOW TO PROCEED. THE CONTRACTOR SHALL DISCONTINUE WORK IN THE AFFECTED PROJECT AREA UNTIL AGREEMENT HAS BEEN REACHED WITH THIS FIRM ON CORRECTIVE ACTION.
17. THE SITE SPECIFIC SOIL SURVEY WAS PRODUCED JANUARY 18, 2021, AND WAS PREPARED BY JAMES P. GOVE, CSS # 004, GOVE ENVIRONMENTAL SERVICES, INC. THE SURVEY AREA IS LOCATED AT TIBBETTS ROAD, ROCHESTER, NH.
   - 17.1. THIS MAP PRODUCT IS WITHIN THE TECHNICAL STANDARDS OF THE NATIONAL COOPERATIVE SOIL SURVEY. IT IS A SPECIAL PURPOSE PRODUCT, INTENDED FOR INFILTRATION REQUIREMENTS BY THE NH DES ALTERATION OF TERRAIN BUREAU. IT WAS PRODUCED BY A PROFESSIONAL SOIL SCIENTIST, AND IS NOT A PRODUCT OF THE USDA NATURAL RESOURCES CONSERVATION SERVICE. THERE IS A REPORT THAT ACCOMPANIES THIS MAP.
   - 17.2. SOILS WERE IDENTIFIED WITH THE NEW HAMPSHIRE STATE-WIDE NUMERICAL SOILS LEGEND, USDA NRCS, DURHAM, NH. ISSUE # 10, JANUARY 2011. THE NUMERIC LEGEND WAS AMENDED TO IDENTIFY THE CORRECT SOIL COMPONENTS OF THE COMPLEX.
   - 17.3. HYDROLOGIC SOIL GROUP FROM KSAT VALUES FOR NEW HAMPSHIRE SOILS, SOCIETY OF SOIL SCIENTISTS OF NEW ENGLAND, SPECIAL PUBLICATION NO. 5, SEPTEMBER, 2009.
   - 17.4. SOIL BOUNDARIES ARE SHOWN PER THE SITE SPECIFIC SOIL SURVEY REPORT AND INCLUDE THE FOLLOWING:

SSSS SYMBOL	SOIL NAME	SOIL GROUP	DRAINAGE CLASS
24	AGAWAM FINE SANDY LOAM	B	WD
38	ELDRIDGE FINE SANDY LOAM	C	MWD
300	UDIPSAMMENTS	A	WD
350	UDIPSAMMENTS, WET SUBSTRATUM	C	MWD
393	TIMAKWA MUCK	D	VPD
900	ENDOAQUENTS, SANDY	D	PD/VPD

NOTE: WD-WELL DRAINED, MWD-MODERATELY WELL DRAINED, PD-POORLY DRAINED, VPD-VERY POORLY DRAINED
SLOPE PHASE: B = 0-8%, C = 8-15%, D=15-25%, E= 25%+

SITE PLAN NOTES:

1. THE PURPOSE OF THIS PLAN IS TO ILLUSTRATE PROPOSED SITE IMPROVEMENTS FOR THE CONSTRUCTION OF A HIGH PERFORMANCE/SPECIALTY MECHANIC/AUTOMOTIVE FACILITY ON THE SUBJECT PARCEL LOCATED. TWO BUILDINGS ARE PROPOSED, BUILDING #1 IS A PROPOSED 5,775 SF SERVICE AND OFFICE BUILDING WITH AN ADDITIONAL MEZZANINE STYLE 1,500 SF SECURITY ACCESSORY APARTMENT; BUILDING #2 IS A 6,000 SF VEHICLE AND PARTS STORAGE BUILDING
2. PROPERTY LINE/BOUNDARY LINE INFORMATION IS BASED ON REFERENCE PLAN 1.
3. PROPOSED USE ON THE LOT FOR TAX MAP 257 LOT 66, IS AN ALLOWED USE OF COMMERCIAL MECHANIC.
4. PER THE CURRENT CITY OF ROCHESTER ZONING ORDINANCE; THE SUBJECT PROPERTY IS ZONED GENERAL INDUSTRIAL (GI) DISTRICT. ZONING REQUIREMENTS FOR THE GI ZONING DISTRICT ARE AS FOLLOWS.

	REQUIRED:	EXISTING LOT:	PROPOSED:
MIN. LOT SIZE	40,000 SF	28.6±AC	N/C
TWO BUILDINGS	80,000 SF		
MIN. LOT FRONTAGE	100'	580'±	N/C
MIN. FRONT SETBACK	25'	N/A	457'±
MIN. SIDE SETBACK	20'	N/A	24'±
MIN. REAR SETBACK	25'	N/A	815'±
MIN. BUILDING SETBACK TO RESIDENTIAL LOT	100'	N/A	417'± BLDG#1 TO 14 TEBBETTS
MAX. LOT COVERAGE	75%	N/A	4.5%±
MAX. BLDG HEIGHT	55'	N/A	23'6"± BLDG#2
NO DISTURB WETLAND BUFFER	25'	N/A	CU REQUESTED
SIGNAGE FREESTANDING			
MIN. AREA	75 SF	N/A	N/A
MAX. HEIGHT	30'	N/A	N/A
SIGNAGE-BUILDING			
MAX. AREA	10% OF FRONT ENTRANCE WALL AREA	N/A	N/A

5. LOT COVERAGEA AREA
   - TOTAL LOT AREA = 28.6± ACRES
   - TOTAL IMPERVIOUS AREA = 1.3± ACRES (56,410SF)
   - BUILDING AREA CALC = 28.6± ACRES/ 1.3± ACRES = 4.5%
6. PARKING CALCULATIONS PER SECTION 10(A) OF THE SITE PLAN REGULATIONS

AUTOMOTIVE SERVICES	=	1.5 SPACES PER 1,000 SF = (5,775 SF / 1,000) 8* 1.5 4 SPACES REQUIRED
	=	4 SPACES PER BAY = 4*7 28 SPACES REQUIRED
STORAGE AND WAREHOUSE	=	1 SPACE PER 1,000 SF= 6,000 SF /1000
	=	6 SPACE REQUIRED
ACCESSORY SECURITY APARTMENT	=	2 SPACES REQUIRED
TOTAL SPACES	=	40 SPACES REQUIRED 38 SURFACE SPACES PROVIDED (2 ADA) WITH AN ADDITIONAL 22± INTERNAL SPACES WAIVER REQUIRED

7. ALL PLAN SHEETS WILL BE ON FILE AT THE CITY OF ROCHESTER PLANNING DEPARTMENT.
8. SITE WORK SHALL BE CONSTRUCTED FROM A COMPLETE SET OF PLANS, NOT ALL FEATURES ARE DETAILED ON EVERY PLAN. THE ENGINEER IS TO BE NOTIFIED OF ANY CONFLICT WITHIN THIS PLAN SET.
9. IF, DURING CONSTRUCTION, IT BECOMES APPARENT THAT DEFICIENCIES EXIST IN THE APPROVED DRAWINGS, THE OWNER SHALL BE REQUIRED TO CORRECT THE DEFICIENCIES TO MEET THE REQUIREMENTS OF THE REGULATIONS AT NO EXPENSE TO THE CITY.
10. IT SHALL BE THE CONTRACTOR'S RESPONSIBILITY TO FAMILIARIZE THEMSELVES WITH THE SITE AND EXISTING CONDITIONS SURROUNDING IT AND THEREON. THE CONTRACTOR SHALL ADVISE THE APPROPRIATE AUTHORITY OF HIS INTENTIONS AT LEAST 48 HOURS IN ADVANCE.
11. THE CONTRACTOR SHALL BID AND PERFORM THE WORK IN ACCORDANCE WILL ALL LOCAL, STATE AND NATIONAL CODES, SPECIFICATIONS, REGULATIONS, AND STANDARDS.
12. THE CONTRACTOR IS RESPONSIBLE FOR THE MEANS AND METHODS OF CONSTRUCTION AND FOR CONDITIONS AT THE SITE. THESE PLANS, PREPARED BY FUSS & O'NEILL, INC. DO NOT EXTEND TO OR INCLUDE SYSTEM PERTAINING TO THE SAFETY OF THE CONSTRUCTION CONTRACTOR OR THEIR EMPLOYEES, AGENTS OR REPRESENTATIVES IN THE PERFORMANCE OF THE WORK. THE SEAL OF THE SURVEYOR OR ENGINEER HERE ON DOES NOT EXTEND TO ANY SUCH SAFETY SYSTEM THAT MAY NOW OR HEREAFTER BE INCORPORATED INTO THESE PLANS. THE CONSTRUCTION CONTRACTOR SHALL PREPARE OR OBTAIN THE APPROPRIATE SAFETY SYSTEM WHICH MAY BE REQUIRED BY THE U.S. OCCUPATIONAL SAFETY AND HEALTH ADMINISTRATION (OSHA) AND/OR LOCAL REGULATIONS.
13. WRITTEN DIMENSIONS HAVE PRECEDENCE OVER SCALED DIMENSIONS. THE CONTRACTOR SHALL USE CAUTION WHEN SCALING REPRODUCED PLANS, IN CASE OF CONFLICT BETWEEN THIS PLAN SET AND ANY OTHER DRAWING AND/OR SPECIFICATION, THE ENGINEER SHALL BE NOTIFIED IMMEDIATELY FOR CLARIFICATIONS.
14. THE CONTRACTOR SHALL MAINTAIN EMERGENCY ACCESS TO ALL AREAS AFFECTED BY THEIR WORK AT ALL TIMES.
15. IF ANY ERROR OR OMISSION IN THESE PLANS IS DISCOVERED BY THE CONTRACTOR, THE CONTRACTOR SHALL CONTACT THE ENGINEER OF RECORD IMMEDIATELY IN WRITING FOR DIRECTION ON HOW TO PROCEED. THE CONTRACTOR SHALL DISCONTINUE WORK IN THE AFFECTED PROJECT AREA UNTIL AGREEMENT HAS BEEN REACHED WITH THIS FIRM ON CORRECTIVE ACTION.
16. ALL MATERIALS AND METHODS OF CONSTRUCTION SHALL CONFORM TO THE CITY OF ROCHESTER SITE PLAN REGULATIONS, CITY OF ROCHESTER DEPARTMENT OF PUBLIC WORKS STANDARD SPECIFICATIONS, AND THE LATEST EDITION OF THE NEW HAMPSHIRE DEPARTMENT OF TRANSPORTATION'S STANDARD SPECIFICATIONS FOR ROAD AND BRIDGE CONSTRUCTION. ALL CONSTRUCTION DETAILS SHALL BE IN ACCORDANCE WITH THE CITY OF ROCHESTER.
17. THE DRIVEWAY IS DESIGNED TO ACCOMMODATE THE CITY OF ROCHESTER EMERGENCY VEHICLE - 48' FIRE TRUCK CIRCULATION NEEDS.
18. SNOW SHALL BE STORED IN OPEN AREAS ON SITES. SNOW SHALL NOT BLOCK SIGHT DISTANCES AND SHALL BE TRANSPORTED OFFSITE OR INTO OPEN AREAS IF NEEDED. SNOW SHALL NOT BE STORED WITHIN INFILTRATION BASINS. OFFSITE TRANSPORT OF SNOW SHALL BE DONE SO IN ACCORDANCE WITH NHDES REGULATIONS.
19. FERTILIZER SHALL BE HANDLED IN ACCORDANCE WITH RSA 431:33 TO 35, OR AS AMENDED. SEE MANUAL OF BEST MANAGEMENT PRACTICES FOR AGRICULTURE IN NEW HAMPSHIRE AS PREPARED BY NEW HAMPSHIRE DEPARTMENT OF AGRICULTURE, AUGUST, 1993 OR AS AMENDED.
20. A SEPARATE PERMIT IS REQUIRED FOR ALL SIGNS. SITE SIGNAGE SHALL BE REVIEWED AND APPROVED BY THE CITY PRIOR TO INSTALLATION. SIGNAGE IS REQUIRED PRIOR TO CITY C.O.
21. ALL STATE PERMITS WILL BE PROVIDED TO THE PLANNING DEPARTMENT UPON RECEIPT.
22. SEE OTHER PLAN SHEETS FOR RELATED NOTES AND ASSOCIATED INFORMATION.

LIGHTING PLAN NOTES:

1. THE PURPOSE OF THIS PLAN IS TO SHOW PROPOSED LIGHTING FOR THE SUBJECT PROPERTY. THIS ANALYSIS WAS PERFORMED AND PROVIDED BY KEN SWEENEY CHARRON INC. 603-624-4827, KSWEENEY@CHARRONINC.COM
2. THE PROFESSIONAL ENGINEER ENDORSEMENT BY F&O ON THIS SHEET DOES NOT INCLUDE DESIGN ENDORSEMENT OF THIS DETAILED INFORMATION. CONTACT CHARRON INC. FOR ADDITIONAL INFORMATION.
3. ALL SITE LIGHTING IS TO COMPLY WITH ALL PROVISIONS OUTLINED WITHIN THE CITY OF ROCHESTER REGULATIONS.
4. LIGHTING CONDUIT DESIGNED BY OTHERS.
5. SEE DETAIL SHEETS FOR LIGHTING DETAILS.

GRADING, DRAINAGE, AND EROSION CONTROL PLAN NOTES:

1. THE PURPOSE OF THIS PLAN IS TO ILLUSTRATE THE PROPOSED GRADING, DRAINAGE, STORMWATER MANAGEMENT, AND EROSION CONTROL SITE IMPROVEMENTS FOR THE SUBJECT PARCEL.
2. SITE WORK SHALL BE CONSTRUCTED FROM A COMPLETE SET OF PLANS, NOT ALL FEATURES ARE DETAILED ON EVERY PLAN. THE ENGINEER IS TO BE NOTIFIED OF ANY CONFLICT WITHIN THIS PLAN SET. ALL PLAN SHEETS WILL BE ON FILE AT THE CITY OF ROCHESTER.
3. IT SHALL BE THE CONTRACTOR'S RESPONSIBILITY TO FAMILIARIZE THEMSELVES WITH THE SITE AND EXISTING CONDITIONS SURROUNDING IT AND THEREON. THE CONTRACTOR SHALL ADVISE THE APPROPRIATE AUTHORITY OF HIS INTENTIONS AT LEAST 48 HOURS IN ADVANCE.
4. IT SHALL BE THE CONTRACTOR'S RESPONSIBILITY TO FAMILIARIZE THEMSELVES WITH THE SITE AND EXISTING CONDITIONS SURROUNDING IT AND THEREON. THE CONTRACTOR SHALL VERIFY TEMPORARY BENCH MARKS (TBMS) IDENTIFIED ON REFERENCE PLANS PRIOR TO CONSTRUCTION AND NOTIFY THE CERTIFIED LAND SURVEYOR OR ANY DISCREPANCIES.
5. IT SHALL BE THE CONTRACTOR'S RESPONSIBILITY TO CONFIRM THE LOCATION OF EXISTING FEATURES BOTH ABOVE GROUND AND BELOW, NO GUARANTEE IS MADE BY THIS OFFICE OR INDIVIDUALS OF LOCATION OF EXISTING FEATURES. UNDERGROUND UTILITIES ARE APPROXIMATE BASED ON REFERENCES LOCATED ON THE COVER SHEET.
6. ALL DRAINAGE STRUCTURES IN PAVEMENT SHALL HAVE RIMS SET TO FINISH GRADE REGARDLESS OF ANY ELEVATIONS OTHERWISE SHOWN.
7. DRAINAGE PIPE LENGTHS NOTED ARE MEASURED FROM CENTER OF STRUCTURE TO CENTER OF STRUCTURE UNLESS OTHERWISE NOTED.
8. ALL EXCAVATIONS SHALL BE THOROUGHLY SECURED ON A DAILY BASIS BY THE CONTRACTOR AT THE COMPLETION OF CONSTRUCTION OPERATIONS IN THE IMMEDIATE AREA.
9. THE CONTRACTOR SHALL BE RESPONSIBLE FOR MAINTAINING ALL EROSION AND SEDIMENT CONTROL DEVICES AS SHOWN IN THE PLANS THROUGHOUT THE DURATION OF THE PROJECT IN ACCORDANCE WITH APPLICABLE NHDES STANDARDS. THE DETAILS PROVIDED SERVE AS A GUIDE ONLY.
10. IF, DURING CONSTRUCTION, IT BECOMES APPARENT THAT ADDITIONAL EROSION CONTROL MEASURES ARE REQUIRED TO STOP ANY EROSION ON THE CONSTRUCTION SITE, THE PROPERTY OWNER SHALL BE REQUIRED TO INSTALL THE NECESSARY EROSION PROTECTION AT NO EXPENSE TO THE MUNICIPALITY.
11. ALL PROPOSED AND EXISTING CATCH BASINS, THAT MAY RECEIVE STORMWATER RUNOFF FROM THE DEVELOPMENT DURING CONSTRUCTION, SHOULD BE OUTFITTED WITH INLET PROTECTION.
12. VERIFY TBM ELEVATIONS PRIOR TO CONSTRUCTION.
13. THE CONTRACTOR SHALL STABILIZE ALL DITCHES, SWALES, AND PONDS PRIOR TO DIRECTING STORM WATER RUN-OFF TO THEM.
14. INSTALL UNDERDRAIN IN ALL CUT SECTIONS. DAYLIGHT TO STORMWATER BASIN, SWALE, OR CONNECT TO CATCH BASIN.
15. FLUSH CLEAN AND REMOVE ALL DEBRIS OF EXISTING AND PROPOSED CULVERTS DURING AND POST CONSTRUCTION.
16. INSPECT EXISTING CONDITION OF ALL PIPES/CULVERTS/HEADWALLS DURING CONSTRUCTION, REPLACE AS NECESSARY.
17. INSTALL EROSION CONTROL BLANKETS ON ALL SLOPES 3:1 AND STEEPER.
18. REMOVE ALL UNSUITABLE MATERIALS ENCOUNTERED DURING EXCAVATIONS AND REPLACE WITH SUITABLE FILL. CONTRACTOR TO COORDINATE ADDITIONAL TEST BORINGS, TEST PITS, AND COORDINATE WITH A GEOTECHNICAL ENGINEER, IF NECESSARY.
19. IF LEDGE IS DISCOVERED DURING EXCAVATION, REMOVE LEDGE A MINIMUM OF TWO (2) FEET BELOW GRAVELS AND REPLACE WITH SAND.
20. ORANGE CONSTRUCTION/SNOW FENCE IS TO BE INSTALLED AROUND ALL WETLANDS WITHIN 100' OF PROPOSED GRADING, AND IS TO BE MAINTAINED DURING ALL SITE CONSTRUCTION.
21. CONTRACTORS LOAM AND SEED ALL DISTURBED AREAS PER DETAIL LOCATED WITHIN THIS PLAN SET.
22. SEE OTHER PLAN SHEETS FOR RELATED NOTES AND ASSOCIATED INFORMATION.

BUILDING AND UTILITY PLAN NOTES:

1. UTILITY LOCATIONS AS SHOWN ON THESE PLANS HAVE BEEN OBTAINED FROM VARIOUS SOURCES AND THEIR LOCATIONS ARE ONLY APPROXIMATE. BEFORE ANY CONSTRUCTION ACTIVITY BEGINS, THE CONTRACTOR SHALL CONTACT DIG-SAFE AT 1-888-DIG-SAFE AND FIELD VERIFY ALL UTILITY LOCATIONS.
2. THE CONTRACTOR SHALL BE RESPONSIBLE FOR VERIFYING AND DETERMINING THE LOCATION, SIZE AND ELEVATION OF ALL EXISTING UTILITIES SHOWN ON THESE PLANS PRIOR TO THE START OF ANY CONSTRUCTION. THE ENGINEER SHALL BE NOTIFIED IN WRITING IF ANY UTILITIES FOUND INTERFERING WITH THE PROPOSED CONSTRUCTION AND APPROPRIATE REMEDIAL ACTION SHALL BE AGREED TO BY THE ENGINEER BEFORE PROCEEDING WITH THE WORK. THE CONTRACTOR SHALL BE RESPONSIBLE TO CONTACT NEW HAMPSHIRE DIG SAFE, AT 1-888-DIG-SAFE, AT LEAST 72 HOURS BEFORE DIGGING.
3. THE CONTRACTOR SHALL CONTACT ALL UTILITY COMPANIES OWNING UTILITIES, EITHER OVERHEAD OR UNDERGROUND, WITHIN THE CONSTRUCTION AREA. THE PROTECTION OR RELOCATION OF UTILITIES IS ULTIMATELY THE RESPONSIBILITY OF THE CONTRACTOR.
4. THE CONTRACTOR SHALL COORDINATE MATERIALS AND INSTALLATION SPECIFICATIONS WITH THE INDIVIDUAL UTILITY AGENCIES/COMPANIES, AND ARRANGE FOR ALL INSPECTIONS.
5. INSTALLATION OF ALL UTILITIES SHALL BE UNDERGROUND.
6. COORDINATE WITH ELECTRIC UTILITY COMPANY FOR FINAL ELECTRICAL LAYOUT.
7. INSTALL 2" THICK X 5' WIDE BLUEBOARD INSULATION ABOVE SEWER LINE IN ANY AREAS WITH LESS THAN 6' COVER, AND ABOVE WATER LINE IN ANY AREAS WITH LESS THAN 5.5' COVER (TYP)
8. PRIOR TO THE DATE OF APPROVAL OF THESE DESIGN PLANS; FINAL MECHANICAL, ELECTRICAL,PLUMBING (MEP), AND ARCHITECTURAL PLANS WERE NOT PROVIDED TO THE DESIGN ENGINEER. PRIOR TO CONSTRUCTION THE MEP CONTRACTORS AND ARCHITECTS ARE REQUIRED TO REVIEW, APPROVE, AND/OR AMEND ALL MEP AND ARCHITECTURAL DESIGN WITHIN THE BUILDINGS OR UPON THE SITE. INCLUDING BUT NOT LIMITED TO SIZES, MATERIALS, ELEVATIONS, AND OVERALL DESIGN. COORDINATE WITH THE MUNICIPALITY AND DESIGN ENGINEER FOR ALL PLAN REVISIONS.
9. A MINIMUM 10' HORIZONTAL SEPARATION IS REQUIRED BETWEEN ALL WATER AND SEWER UTILITIES. AT MAIN AND SERVICE CROSSINGS WHERE 10' HORIZONTAL SEPARATION IS NOT POSSIBLE, AN 18" VERTICAL CLEARANCE SHALL BE PROVIDED WITH WATER OVER SEWER. (TYP)
10. EXTERNAL FIRE LANES ARE NON DEMARCATED AND PARKING SPACES ARE ILLUSTRATED UPON THE PLAN.
11. COORDINATE WITH THE CITY TO PROVIDE ANY REQUIRED PERFORMANCE GUARANTEES, TO SERVE AS A FINANCIAL SURETY IN THE EVENT OF ABANDONMENT, INSTALLATION AND MAINTENANCE OF EROSION AND SEDIMENT CONTROLS THROUGHOUT THE CONSTRUCTION PERIOD, AND FULL AND FINAL COMPLETION OF PUBLIC IMPROVEMENTS.
12. ALL RETAINING WALLS SHALL HAVE DESIGN DRAWINGS STAMPED BY A STATE OF NH LICENSED PROFESSIONAL STRUCTURAL ENGINEER, AND SUBMITTED TO THE CITY FOR REVIEW.
13. THE FOLLOWING PERMITS ARE REQUIRED BY ROCHESTER DPW, PRIOR TO CONSTRUCTION:
   - 13.1. EXCAVATION PERMIT
   - 13.2. STORMWATER PERMIT
   - 13.3. DRIVEWAY/CURB CUT PERMIT
   - 13.4. WATER CONNECTION PERMIT
   - 13.5. CROSS CONNECTION CONTROL DEVICE APPROVAL AND REGISTRATION
14. ARCHITECTURAL PLANS ARE TO BE COORDINATED WITH THE FIRE DEPARTMENT, PRIOR TO CITY SIGN OFF, TO ENSURE LIFE SAFETY/EMERGENCY EGRESS REQUIREMENTS ARE MET.
15. COORDINATE WATER USAGE ESTIMATES FOR SERVICE AND METER SIZING WITH DPW. CITY MAY REQUIRE AN ABOVE GRADE ENCLOSURE FOR METER AND BACKFLOW DEVICES, AT ENTRANCE.
16. REFER TO NOTICE OF DECISION BY PLANNING BOARD ON SHEET GI-103, FOR ALL CONDITIONS OF APPROVAL.
17. SEE OTHER PLAN SHEETS FOR RELATED NOTES AND ASSOCIATED INFORMATION.

No.	DATE	DESCRIPTION	DESIGNER	REVIEWER
5.	10/26/2021	REVS PER NHDES	ACD	BAP
4.	09/21/2021	REVS PER NHF&G AND WETLANDS	ACD	BAP
3.	07/20/2021	REVS PER CITY, DES WETLANDS, AND F&G	ACD	BAP
2.	05/05/2021	REVS PER CITY TRG, PB, AOT,& WETLANDS	ACD	BAP
1.	03/15/2021	REVS PER CITY TRG COMMENTS	ACD	BAP

STATE OF NEW HAMPSHIRE — ARMAND ALPHONSE DUBOIS III — No. 11921 — 10/26/2021 — LICENSED — PROFESSIONAL ENGINEER

SCALE: HORZ.: VERT.:
DATUM: HORZ.: NAD83 - NH83 VERT.: NAVD88
0
GRAPHIC SCALE

FUSS & O'NEILL
50 COMMERCIAL STREET
MANCHESTER, NEW HAMPSHIRE 03101
603.668.8223
www.fando.com

EFI EXPRESS
GENERAL NOTES PLAN
TAX MAP 257 LOT 66
0 TEBBETTS ROAD
ROCHESTER NEW HAMPSHIRE

PROJ. No.: 20200646.A10
DATE: JANUARY 2021

GI-102

File Path: J:\DWG\P2020\0646\A10\Civil\Plan\20200646.10_COV_2021-03.dwg Layout: GI-102 Plotted: Mon, November 15, 2021 - 1:33 PM User: adubois
Plotter: DWG TO PDF.PC3 CTB File: FO.STB
MS VIEW: LAYER STATE:

CITY OF ROCHESTER NOTICE OF DECISION/CONDITIONS OF APPROVAL - DATED JUNE 9, 2021:

1. PLAN MODIFICATIONS. THE PLAN DRAWINGS ARE TO BE MODIFIED AS FOLLOWS:
   a. CURRENT TOTAL PROPOSED PAVED WIDTH WITH CURBS IS 26 FEET. PLEASE REDUCE THE WIDTH OF DRIVEWAY TO 22 FEET WITH 1-FT MOUNTABLE LOW PROFILE CAPE COD CURBS TO DIRECT STORMWATER TO CBS AND TREATMENT. PROVIDE 1 FOOT GRAVEL SHOULDERS ON THE BACK OF THE CURBING TO FOR TIRES OF LARGE VEHICLES THAT PASS ON THE DRIVEWAY AND NEED TO PULL WIDE TO PASS, MOUNTING THE CURB. GRADING AT EXISTING LIMITS OF THE PAVED DRIVE SHOULD BE SIMILAR TO PROPOSED GRADING, DRAINING AWAY FROM DRIVE OUTSIDE GRAVEL SHOULDERS. REVISE CROSS-SECTION ON SHEET CD-501.
   b. REVISE PLANS TO SHOW 8-INCH WATER SPLITTING TO FIRE AND DOMESTIC PRIOR TO ENTERING THE FIRST BUILDING WITH NO TEES OR CONNECTIONS OTHER THAN HYDRANTS PRIOR TO THAT BUILDING. THE SERVICES MUST BE FIT WITH METER AND BACKFLOW DEVICES IMMEDIATELY UPON ENTRY TO BUILDING. ALL DOMESTIC AND FIRE WATER SERVICE TO OTHER BUILDINGS AND THE RV HOOKUPS MUST OCCUR AFTER THE METER AND BACKFLOW DEVICES. A HIGH HAZARD RPZ BACKFLOW DEVICE IS REQUIRED ON THE DOMESTIC SERVICE FOR THIS USE.
   c. THE SEWER TRENCH DETAIL ON SHEET CD-503 INCORRECTLY REFERENCES WATER MAIN AND POLYWRAP.
   d. REMOVE WATER METER VAULT DETAIL ON SHEET CD-503.
   e. CITY OF ROCHESTER HAS STANDARDIZED ON THE AMERICAN DARLING B84 HYDRANT, PLEASE NOTE.
2. PLAN NOTES. ADD THE FOLLOWING NOTES (OR EQUIVALENT) TO THE PLAN DRAWINGS:
   a. ADD NOTES TO SHEET CU-101 TO REFERENCE DETAIL FOR WATER AND DRAIN CROSSING ON SHEET CD-504 (TYPICAL OF SEVERAL LOCATIONS)
   b. SHEET GI-102 EXISTING CONDITIONS NOTES INDICATE EXISTING LOT HAS SEPTIC AND WELL. IF EXISTING WELL AND SEPTIC ARE ON SITE, SHOW TO BE DECOMMISSIONED OR REVISE/REMOVE NOTE.
3. STATE PLANE COORDINATES. THE PLANS ARE TO BE TIED INTO THE STATE PLANE COORDINATE SYSTEM.
4. PLEASE PROVIDE THE PLANNING DEPARTMENT WITH COPIES OF AOT REVIEW COMMENTS AND ANY REVISED SUBMISSIONS, WHEN AND IF APPLICABLE (SEND TO DEPARTMENT OF PUBLIC WORKS).
5. PLEASE SUBMIT YOUR SPILL PREVENTION PLAN TO THE PLANNING DEPARTMENT.
6. INSPECTIONS. THE APPLICANT MUST SIGN THE AGREEMENT FOR PAYMENT OF INSPECTION FEES AND MAKE A CASH DEPOSIT TO COVER THE EXPECTED COSTS OF INSPECTIONS, IN AN AMOUNT THAT IS DETERMINED BY THE PUBLIC WORKS DEPARTMENT. (THE INSPECTIONS WILL BE CONDUCTED BY THE CITY OF ROCHESTER PUBLIC WORKS DEPARTMENT OR ITS DESIGNEE. THE APPLICANT MUST PAY FOR INSPECTIONS -- AT AN HOURLY RATE AS DETERMINED BY THE PUBLIC WORKS DEPARTMENT - OF THE SITE, INCLUDING ALL NEW INFRASTRUCTURE SERVING THE SITE).
7. IN ACCORDANCE WITH RSA 676:4-B THE PUBLIC WORKS DEPARTMENT MAY, AT ITS DISCRETION DEPENDENT ON PROJECT COMPLEXITY, REQUIRE 3RD PARTY CONSTRUCTION INSPECTION OF ALL SUBDIVISION PLAN IMPROVEMENTS. PAYMENT OF CONSTRUCTION INSPECTION SERVICES BY THE APPLICANT WHETHER PERFORMED BY A 3RD PARTY FIRM OR DPW WILL BE VIA A SIGNED CONSTRUCTION INSPECTION SERVICES AGREEMENT. ALL REQUIRED SUBDIVISION PLAN IMPROVEMENTS SHALL ADDITIONALLY BE SUBJECT TO INSPECTION BY THE CITY ENGINEER OR DESIGNEE WHO SHALL ACT AS THE AGENT OF THE BOARD IN ENFORCING THE STANDARDS AND SPECIFICATIONS CALLED FOR IN THESE REGULATIONS.
8. PRE-CONSTRUCTION MEETING. THE PRE-CONSTRUCTION MEETING AGREEMENT IS TO BE SIGNED BY THE PROPERTY OWNER.
9. OTHER PERMITS. ALL REQUIRED STATE AND FEDERAL PERMITS MUST BE OBTAINED -- INCLUDING ANY WATER AND SEWER, AS APPROPRIATE -- WITH COPIES OF PERMITS OR CONFIRMATION OF APPROVALS DELIVERED TO THE PLANNING DEPARTMENT.
10. DRAINAGE MAINTENANCE. IF APPLICABLE, A DRAINAGE MAINTENANCE AGREEMENT APPROVED BY PUBLIC WORKS MUST BE EXECUTED. IN ORDER TO COMPLY WITH THE STORMWATER MANAGEMENT IOP MANUAL, DPW STAFF SHALL BE ALLOWED PERIODIC ACCESS TO THE PARKING AREAS FOR INSPECTIONS RELATED TO THE ANNUAL STORMWATER INFRASTRUCTURE REPORT COMPILED FOR THE CITY ENGINEER.
11. FINAL DRAWINGS, (A) THREE SETS OF LARGE BLACK-LINE PLUS (B) ONE SET OF 11"X17" FINAL APPROVED SITE PLAN DRAWINGS PLUS (C) ONE ELECTRONIC VERSION BY PDF OR FLASH DRIVE MUST BE ON FILE WITH THE CITY. EACH INDIVIDUAL SHEET IN EVERY SET OF DRAWINGS MUST BE STAMPED AND SIGNED BY THE LAND SURVEYOR, ENGINEER, OR ARCHITECT RESPONSIBLE FOR THE SITE PLANS. (THE APPLICANT NEED ONLY SUBMIT ADDITIONAL BLACK-LINE SETS OF DRAWINGS OR INDIVIDUAL SHEETS, AS NEEDED TO MAKE FOUR COMPLETE SETS - CONSULT THE PLANNING DEPARTMENT). AT THE DISCRETION OF THE PLANNING DEPARTMENT MINOR CHANGES TO DRAWINGS (AS REQUIRED IN PRECEDENT CONDITION, ABOVE) MAY BE MARKED BY HAND. NOTE: IF THERE ARE SIGNIFICANT CHANGES TO BE MADE TO THE PLANS, AS SPECIFIED ABOVE, ONE FULL SIZE PAPER CHECK PRINT MUST BE SENT TO THE PLANNING DEPARTMENT FOR REVIEW PRIOR TO PRODUCING THESE FINAL DRAWINGS. ONCE THE PLAN IS RECORDED AT THE REGISTRY OF DEEDS, SUBMIT TWO 11" X 17" RECORDED COPIES OF THE PLAN.

CITY OF ROCHESTER GENERAL AND SUBSEQUENT CONDITIONS
ALL OF THE CONDITIONS BELOW ARE ATTACHED TO THIS APPROVAL.

1. EROSION CONTROL SHALL BE PROPERLY INSTALLED ON SITE PRIOR TO ANY CONSTRUCTION. EROSION CONTROL SHALL BE PROPERLY MAINTAINED THROUGHOUT CONSTRUCTION; ANY BREAKS OR BREECHES SHALL BE REPAIRED WITHIN 48 HOURS OF THE STORM EVENT.
2. WETLAND BUFFER AREAS SHALL NOT BE IMPACTED BY ANY CONSTRUCTION ACTIVITIES (OTHER THAN THOSE IMPACTS PERMITTED UNDER THE CUP AND DES WETANDS PERMIT). WETLAND BUFFERS SHALL BE MARKED WITH ORANGE SNOW FENCE PRIOR TO ANY ONSITE ACTIVITY, AND SUCH MARKERS SHALL BE MAINTAINED THROUGHOUT CONSTRUCTION.
3. ALL OUTDOOR LIGHTING (INCLUDING SECURITY LIGHTS) SHALL BE DOWN LIT AND SHIELDED SO NO DIRECT LIGHT IS VISIBLE FROM ADJACENT PROPERTIES AND ROADWAYS;
4. SNOW STORAGE - SNOW SHALL BE REMOVED AND STORED SUCH THAT THE DRAINAGE STRUCTURES CAN FUNCTION PROPERLY AND THE REQUIRED PARKING SPACES CAN BE UTILIZED. SNOW STORAGE MAY NOT IMPACT THE CITY'S ACCESS TO THE SEWER PUMP STATION.
5. A SPILL KIT KEPT MUST ALWAYS BE ONSITE.
6. A SURVEYOR IS TO SUBMIT A SIGNED LETTER TO THE PLANNING DEPARTMENT STATING THAT THE NEW LOT CORNER MONUMENTS HAVE BEEN SET (SUBDIVISION REGULATION 6.1) AND THAT REFERENCE PINS HAVE BEEN SET ON ALL EASEMENT BOUNDS (SUBDIVISION REGULATION 5.7.4).
7. THE NEW DRAINAGE INFRASTRUCTURE MUST BE CONSTRUCTED PRIOR TO CONSTRUCTION OF THE NEW BUILDING AND ASSOCIATED PARKING. IF THE INFRASTRUCTURE IS USED AS A TEMPORARY SETTLING AREA DURING CONSTRUCTION, THE INFRASTRUCTURE SHALL BE CLEANED OUT AND BROUGHT DOWN TO PROPOSED BOTTOM ELEVATION PRIOR TO CO OF NEW BUILDING.
8. CONSTRUCTION COST ESTIMATE FOR THIS PROJECT SHALL BE SUBMITTED FOR REVIEW AND APPROVAL. ESTIMATE SHALL BE BASED ON THE DEPARTMENT OF PUBLIC WORKS CONSTRUCTION SURETY SCHEDULE AND SHALL INCLUDE A 10% CONTINGENCY. COSTS FOR ITEMS NOT SPECIFICALLY ADDRESSED IN THE SURETY SCHEDULE WILL BE BASED ON 1) CITY STANDARDS, 2) NHDOT WEIGHTED AVERAGES, 3) INDUSTRY STANDARDS, OR 4) CONTRACTOR ESTIMATES.
9. PERFORMANCE GUARANTEE. IF APPLICABLE, PRIOR TO ISSUANCE OF A BUDDING PERMIT OR BEGINNING SITE WORK, THE APPLICANT SHALL PROVIDE SITE IMPROVEMENT AND RESTORATION SECURITY. THE PERFORMANCE GUARANTEE SHALL BE AN AMOUNT EQUAL TO 10% OF THE APPROVED CONSTRUCTION COST ESTIMATE (INCLUDING A 10% CONTINGENCY) TO ENSURE THE PROPER AND TIMELY COMPLETION OF SITE WORK AND SITE RESTORATION WITHIN THE DEVELOPMENT. BEFORE THE SUBDIVISION/ SITE PLAN CAN BE RECORDED, LOTS DEEDED TO THIRD PARTIES, OR STRUCTURES OCCUPIED THE APPLICANT SHALL PROVIDE A COST ESTIMATE OF REMAINING SITE WORK INCLUDING LABOR, AND PROVIDE THE CITY WITH A SECURITY IN THE FORM OF EITHER LETTER OF CREDIT OR CASH EQUAL TO 110% OF THE ESTIMATED COST FOR REMAINING WORK. (ANY EXISTING SURETY BEING HELD AT THIS TIME MAY BE CONVERTED TOWARD THIS AMOUNT). THIS AMOUNT SHALL INCLUDE PREPARATION OF AS-BUILT PLANS.
10. AS-BUILTS. THREE SETS OF FULL SIZE (MEASURING AT LEAST 22" X 34") OR BLACK LINE PAPER PLUS 1 SET OF 1 1" X 17" PLUS ONE DIGITAL PDF COPY OF THE AS-BUILT SITE PLANS (OR "RECORD DRAWINGS") STAMPED AND SIGNED BY THE ENGINEER OR SURVEYOR ARE TO BE SUBMITTED TO THE PLANNING DEPARTMENT PRIOR TO ISSUANCE OF THE CERTIFICATE OF OCCUPANCY (OR USE/ OCCUPANCY OF THE SITE WHERE NO CO IS REQUIRED). THE AS-BUILT DRAWINGS MUST INCLUDE THE FOLLOWING LANGUAGE OF EQUIVALENT: "THIS AS-BUILT DRAWING SUBSTANTIALLY CONFORMS WITH THE FINAL PLANS APPROVED BY THE CITY OF ROCHESTER PLANNING BOARD AND CERTIFIED BY THE PLANNING AND DEVELOPMENT DEPARTMENT EXCEPT FOR THE FOLLOWING SIGNIFICANT MODIFICATIONS: . . .". IF NO SIGNIFICANT MODIFICATIONS WERE MADE SIMPLY STATE "NONE". OTHERWISE, ITEMIZE THE MODIFICATIONS ON THE AS-BUILT OR ON AN ACCOMPANYING LETTER. THE DEPARTMENT RELIES ON THE GOOD JUDGEMENT AND GOOD FAITH OF THE ENGINEER/ SURVEYOR IN DETERMINING WHICH MODIFICATIONS SHOULD BE CONSIDERED SIGNIFICANT (FOR EXAMPLE, MINOR ADJUSTMENTS IN LOCATIONS OF PLANT MATERIALS WOULD NOT BE SIGNIFICANT WHEREAS RELOCATION OF A CATCH BASIN WOULD BE). AS-BUILTS ARE TO INCLUDE STATE PLANE COORDINATES. A COPY OF THE ASBUILT LINE WORK IS ALSO TO BE SUBMITTED AS A CAD FILE THAT IS GEOREFERENCED TO THAT SAME COORDINATE SYSTEM.
11. EXECUTION. THE PROJECT MUST BE BUILT AND EXECUTED EXACTLY AS SPECIFIED IN THE APPROVED APPLICATION UNLESS CHANGES ARE APPROVED BY THE CITY.
12. APPROVALS. ALL OF THE DOCUMENTATION SUBMITTED IN THE APPLICATION PACKAGE BY THE APPLICANT AND ANY REQUIREMENTS IMPOSED BY OTHER AGENCIES ARE PART OF THIS APPROVAL UNLESS OTHERWISE UPDATED, REVISED, CLARIFIED IN SOME MANNER, OR SUPERSEDED IN FULL OR IN PART. IN THE CASE OF CONFLICTING INFORMATION BETWEEN DOCUMENTS, THE MOST RECENT DOCUMENTATION AND THIS NOTICE HEREIN SHALL GENERALLY BE DETERMINING.
13. VIOLATIONS. IN THE EVENT OF ANY VIOLATIONS OF THESE CONDITIONS OF APPROVAL OR OF ANY PERTINENT LOCAL, STATE, OR FEDERAL LAWS -- SUCH AS THOSE REGARDING EROSION AND SEDIMENTATION CONTROL, WETLANDS, STORMWATER MANAGEMENT, AND GENERAL SITE DEVELOPMENT STANDARDS -- THE CITY OF ROCHESTER RESERVES THE RIGHT TO TAKE ANY APPROPRIATE PERMISSIBLE ACTION, INCLUDING, BUT NOT LIMITED TO, WITHHOLDING OF BUILDING PERMITS, WITHHOLDING OF CERTIFICATES OF OCCUPANCY, WITHHOLDING OF DRIVEWAY PERMITS, REVOCATIONS OF PERMITS/APPROVALS, REFERRING VIOLATIONS TO OTHER AGENCIES, AND CALLING OF BONDS.
14. OTHER PERMITS. IT IS THE RESPONSIBILITY OF THE APPLICANT TO OBTAIN ALL OTHER LOCAL, STATE, AND FEDERAL PERMITS, LICENSES, AND APPROVALS WHICH MAY BE REQUIRED AS PART OF THIS PROJECT. CONTACT THE CITY OF ROCHESTER'S BUILDING, ZONING AND LICENSING DEPARTMENT AT 332-3508 REGARDING BUILDING PERMITS. PLEASE ALSO CONTACT THE CITY OF ROCHESTER FIRE DEPARTMENT AT 330-7182 TO ENSURE THAT THE PROPOSED BUILDING MEETS ALL FIRE CODES. FINALLY, PLEASE CONTACT THE DEPARTMENT OF PUBLIC WORKS FOR ANY STORMWATER, SEWER, OR WATER PERMITS OR FEES THAT ARE REQUIRED.
15. APPEAL PROCESS: PURSUANT TO RSA 677:15, AN AGGRIEVED PARTY MAY APPEAL THIS DECISION TO THE STRAFFORD COUNTY SUPERIOR COURT WITHIN 30 DAYS OF THE DATE THE BOARD VOTED TO APPROVE OR DISAPPROVE THE APPLICATION, OR TO THE ZBA PURSUANT TO RSA 676:5, III WITHIN 30 DAYS OF THE DATE THE BOARD MADE ITS DECISION.

NEW HAMPSHIRE FISH AND GAME AOT PERMIT CONDITIONS RELATED TO THREATENED AND ENDANGERED SPECIES SPECIES - PER ENV-WQ 1503.19(H)

- WOOD TURTLES (SPECIES OF SPECIAL CONCERN) OCCUR WITHIN THE VICINITY OF THE PROJECT SITE. SITE OPERATORS SHALL BE INFORMED OF THE POTENTIAL PRESENCE OF THIS SPECIES AND SHALL BE PROVIDED A FLYER THAT HELPS TO IDENTIFY THIS SPECIES ALONG WITH NHFH CONTACT INFORMATION. SEE PLAN SHEET GI-103.
- NO SUMPS SHALL BE INCLUDED IN THE DESIGN OF CATCH BASINS WHEN LOCATED NEAR OR WITHIN GRASSY AREAS AND HOODS ON OUTLET PIPES SHALL BE ELIMINATED FROM THE DESIGN TO AVOID THE ENTRAPMENT OF RARE WILDLIFE.
- ALL MANUFACTURED EROSION AND SEDIMENT CONTROL PRODUCTS, EXCEPT FOR SILT FENCE INSTALLED IN ACCORDANCE WITH ENV-WQ 1506.04, UTILIZED FOR, BUT NOT LIMITED TO, SLOPE PROTECTION, RUNOFF DIVERSION, SLOPE INTERRUPTION, PERIMETER CONTROL, INLET PROTECTION, CHECK DAMS, AND SEDIMENT TRAPS SHALL NOT CONTAIN WELDED PLASTIC, PLASTIC, OR MULTI-FILAMENT OR MONOFILAMENT POLYPROPYLENE NETTING OR MESH. SEE PLAN SHEET(S) CD-508 AND CD-509 FOR SPECS.
- ALL OBSERVATIONS OF THREATENED OR ENDANGERED SPECIES SHALL BE REPORTED IMMEDIATELY TO THE NEW HAMPSHIRE FISH AND GAME DEPARTMENT NONGAME AND ENDANGERED WILDLIFE ENVIRONMENTAL REVIEW PROGRAM BY PHONE AT 603-271-2461 AND BY EMAIL AT NHFGREVIEW@WILDLIFE.NH.GOV. EMAIL SUBJECT LINE: NHB20-2707 EFI TEBBETTS ROAD ROCHESTER, WILDLIFE SPECIES OBSERVATION. PHOTOGRAPHS SHALL BE PROVIDED FOR VERIFICATION AS FEASIBLE.
- THE NEW HAMPSHIRE FISH AND GAME DEPARTMENT SHALL HAVE ACCESS TO THE PROPERTY DURING THE TERM OF THE PERMIT.

ADDITIONAL NHF&G RECOMMENDATIONS:

- WETLAND BIRDS INCLUDING THE MARSH WREN, SORA (SPECIES OF SPECIAL CONCERN), AND PIED-BILLED GREBE (STATE THREATENED) OCCUR WITHIN THE VICINITY OF THE PROJECT SITE. IF BIRDS ARE OBSERVED TO DISPLAY NESTING BEHAVIOR (FOR EXAMPLE: CALLING, SWOOPING, AGITATED/TERRITORIAL BEHAVIOR), OBSERVERS SHOULD CONTACT THE WILDLIFE DIVISION AT 603-271-2461 OR NHFGREVIEW@WILDLIFE.NH.GOV. PROVIDE NHB NUMBER NHB21-0542 AND PROJECT NAME. MIGRATORY BIRD NESTS ARE PROTECTED UNDER NH AND FEDERAL LAWS.

Wood Turtle *(Glyptemys insculpta)*

(New Hampshire Species of Special Concern)

- Neck and forelimbs are orange.
- Characterized by its highly sculpted shell with each large scute taking on an irregular pyramidal shape.
- Adults can be 5-8 inches long.

Please report sightings to NH Fish and Game at RAARP@wildlife.nh.gov or at 603-271-2461. Photo documentation, location, and date/time of observation is helpful.

NOTE: It is illegal to remove a wood turtle from the wild (RSA 207:1, FIS 804.02).

PLEASE REPORT RARE TURTLES

The NH Fish & Game Department is requesting observations of three turtle species that could be encountered onsite.

Report sightings immediately to NHFG Wildlife Division at 603-271-2461 (M-F 8-4) or to NHFG Wildlife Biologist Melissa Doperalski 603-479-1129 (cell) anytime.

Please report promptly, noting specific location and date. Photographs strongly encouraged

Blanding's turtle (state endangered)
- Large, dark/black domed shell with lighter speckles
- Distinct yellow throat/chin
- Aquatic but often moves on land

Wood turtle (special concern)
- Sculpted, pyramidal brownish shell
- Orange around neck and limbs
- River/stream turtle spending many months on land

Spotted turtle (state threatened)
- Small, mostly aquatic with black or dark brown with yellow spots.
- Fairly flat shell compared to Blanding's turtle

No.	DATE	DESCRIPTION	DESIGNER	REVIEWER
5.	10/26/2021	REVS PER NHDES	ACD	BAP
4.	09/21/2021	REVS PER NHF&G AND WETLANDS	ACD	BAP
3.	07/20/2021	REVS PER CITY, DES WETLANDS, AND F&G	ACD	BAP
2.	05/05/2021	REVS PER CITY TRG, PB, AOT,& WETLANDS	ACD	BAP
1.	03/15/2021	REVS PER CITY TRG COMMENTS	ACD	BAP

STATE OF NEW HAMPSHIRE — ARMAND ALPHONSE DUBOIS III — No. 11921 — 10/26/2021 — LICENSED — PROFESSIONAL ENGINEER

SCALE: HORZ.: VERT.:
DATUM: HORZ.: NAD83 - NH83 VERT.: NAVD88
0
GRAPHIC SCALE

FUSS & O'NEILL
50 COMMERCIAL STREET
MANCHESTER, NEW HAMPSHIRE 03101
603.668.8223
www.fando.com

EFI EXPRESS
GENERAL NOTES PLAN
TAX MAP 257 LOT 66
0 TEBBETTS ROAD
ROCHESTER NEW HAMPSHIRE

PROJ. No.: 20200646.A10
DATE: JANUARY 2021

GI-103

File Path: J:\DWG\P2020\0646\A10\Civil\Plan\20200646.10_COV_2021-03.dwg Layout: GI-103 Plotted: Mon, November 15, 2021 - 1:33 PM User: adubois
MS VIEW: LAYER STATE: Plotter: DWG TO PDF.PC3 CTB File: FO.STB

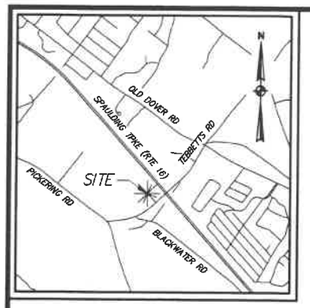

LOCUS
N.T.S.

LEGEND

	Granite Bound Found	—x—	Barb Wire Fence
	Iron Pin Found		Sign
	Iron Pipe Found		Deciduous Tree w/Barbed Wire
NHHB	NH Highway Bound		Coniferous Tree w/Barbed Wire
	Hydrant	A.G.	Above Grade
	Catch Basin	B.G.	Below Grade

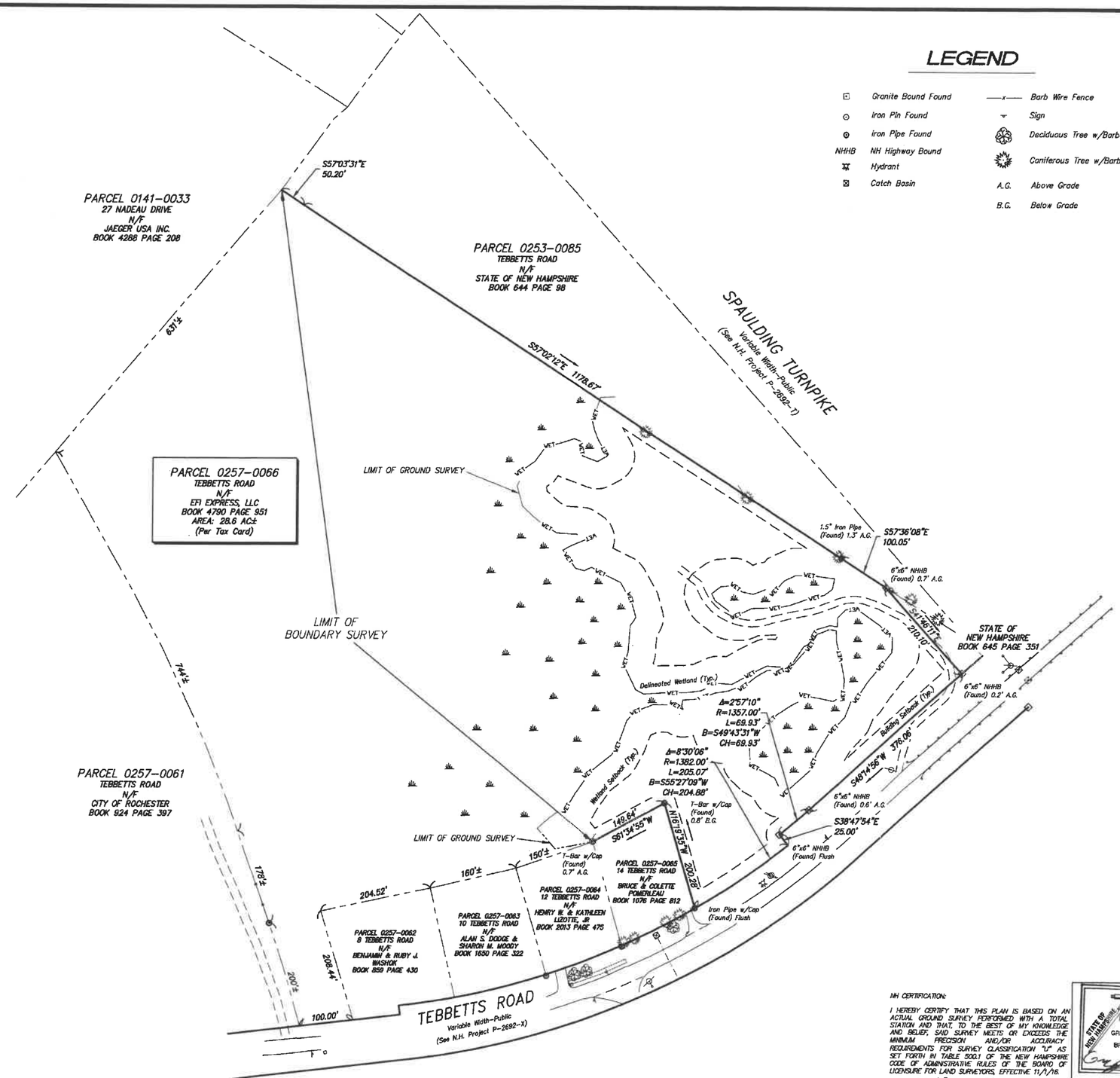

REFERENCE PLANS:

1) STATE OF NEW HAMPSHIRE DEPARTMENT OF PUBLIC WORKS – PLANS OF PROPOSED – LS 1826 (1), N.H. NO. P-2692-T, SPAULDING TURNPIKE, CIRCA 1956, ON FILE AT THE NEW HAMPSHIRE DEPARTMENT OF TRANSPORTATION.

2) STATE OF NEW HAMPSHIRE DEPARTMENT OF PUBLIC WORKS – PLANS OF PROPOSED – LS 1826 (3), N.H. NO. P-2692-X, SPAULDING TURNPIKE, CIRCA 1957, ON FILE AT THE NEW HAMPSHIRE DEPARTMENT OF TRANSPORTATION.

3) PLAN SHOWING LAND OWNED BY THE STATE OF NEW HAMPSHIRE DEPARTMENT OF PUBLIC WORKS AND HIGHWAYS (TRACTS NO. 1 AND NO. 2) ADJACENT TO THE SPAULDING TURNPIKE, ROCHESTER, NEW HAMPSHIRE, DATED OCTOBER 16, 1972, PLAN #412, ON FILE AT THE NEW HAMPSHIRE DEPARTMENT OF TRANSPORTATION.

4) "LIMITED SUBDIVISION, ARTHUR POMERLEAU, ROCHESTER, N.H.", DATED JANUARY 1978, BY FREDERICK E. DREW ASSOCIATES, S.C.R.D. PLAN P017B-0007.

5) "LIMITED SUBDIVISION, ARTHUR POMERLEAU, ROCHESTER, N.H.", DATED JULY 1978, BY FREDERICK E. DREW ASSOCIATES, S.C.R.D. PLAN P017C-0127.

6) "LOT LINE REVISION LAND OF BENJAMIN J. JR. & RUBY J. WASHOK, ROCHESTER, N.H.", DATED MAY 28, 1986, BY JOHN W. DURGIN ASSOCIATES, INC., S.C.R.D. PLAN P029A-0003.

NOTES:

1) THE INTENT OF THIS PLAN IS TO DEFINE THE PARTIAL BOUNDARY OF THE SUBJECT PARCEL AS SHOWN HEREON. THE BOUNDARY LINES THAT HAVE BEEN SURVEYED ARE DENOTED AS LIMIT OF BOUNDARY SURVEY.

2) THIS PLAN IS BASED ON AN ACTUAL FIELD SURVEY PERFORMED ON THE GROUND BETWEEN OCTOBER AND NOVEMBER 2020.

3) BASIS OF BEARING IS NH GRID NORTH.

4) THE SUBJECT PROPERTY IS LOCATED IN THE GENERAL INDUSTRIAL ZONING DISTRICT (GI) PER THE CITY OF ROCHESTER ZONING ORDINANCE, AS AMENDED. BUILDING SETBACKS ARE AS FOLLOWS: FRONT 25', SIDE 20', REAR 25'. BUILDING SETBACKS SHOWN HEREON IS OUR INTERPRETATION OF THE REFERENCED ZONING ORDINANCE. FINAL DETERMINATION IS MADE BY THE CITY OF ROCHESTER ZONING OFFICIALS.

5) SUBJECT PREMISES IS LOCATED IN ZONE X AS SHOWN ON FEMA FLOOD INSURANCE RATE MAP(S) FIRM 33017C0214D, EFFECTIVE DATE: MAY 17, 2005. FLOOD ZONE X IS NOT A SPECIAL FLOOD HAZARD AREA.

6) EASEMENTS AND/OR RIGHTS-OF-WAY AS SHOWN ARE THOSE FOUND DURING OUR RESEARCH OF THE SUBJECT PROPERTY AND ABUTTING TRACTS. IN ADDITION, THE SUBJECT PREMISES MAY BE SUBJECT TO AND/OR WITH THE BENEFIT OF THE FOLLOWING:

a) COMMISSIONERS' RETURN OF LAYOUT DATED JULY 25, 1956, S.C.R.D. BOOK 664 PAGE 55 (SPAULDING TURNPIKE), AS AFFECTED BY DEEDS FROM JOSEPH N. POMERLEAU ET AL TO THE STATE OF NEW HAMPSHIRE DATED APRIL 21, 1955, S.C.R.D. BOOK 644 PAGE 357 AND DATED MAY 1955, S.C.R.D. BOOK 645 PAGE 351.

b) COMMISSIONERS' RETURN OF LAYOUT DATED NOVEMBER 8, 1956, S.C.R.D. BOOK 669 PAGE 84. AS AFFECTED BY DEED FROM JOSEPH N. POMERLEAU ET AL TO THE STATE OF NEW HAMPSHIRE DATED NOVEMBER 1, 1956, S.C.R.D. BOOK 669 PAGE 26.

7) DELINEATED WETLANDS SHOWN HEREON WERE DELINEATED BY GOVE ENVIRONMENTAL SERVICES INC. DURING SEPTEMBER 15, 2020.

8) UTILITY STRUCTURES AT OR ABOVE THE GROUND SURFACE SHOWN HEREON ARE THOSE THAT HAVE BEEN OBSERVED FROM SURFACE EVIDENCE. UTILITIES BENEATH THE GROUND SURFACE HAVE NOT BEEN OBSERVED AND ARE SHOWN APPROXIMATELY HEREON AS DERIVED FROM A COMBINATION OF SURFACE MARKINGS BY OTHERS AND/OR RECORD INFORMATION AND ARE NOT VERIFIED LOCATIONS OR CONFIRMATION OF EXISTENCE OF SAID UNDERGROUND UTILITIES. ALL UNDERGROUND UTILITIES SHOULD BE LOCATED IN THE FIELD PRIOR TO COMMENCEMENT OF ALL SITE WORK. CALL DIG SAFE 1-888-344-7233 A MINIMUM OF 72 HOURS PRIOR TO PLANNED ACTIVITY.

GRAPHIC SCALE

100 0 50 100 200 400

(IN FEET)
1 inch = 100 ft.

NH CERTIFICATION:

I HEREBY CERTIFY THAT THIS PLAN IS BASED ON AN ACTUAL GROUND SURVEY PERFORMED WITH A TOTAL STATION AND THAT, TO THE BEST OF MY KNOWLEDGE AND BELIEF, SAID SURVEY MEETS OR EXCEEDS THE MINIMUM PRECISION AND/OR ACCURACY REQUIREMENTS FOR SURVEY CLASSIFICATION "U" AS SET FORTH IN TABLE 500.1 OF THE NEW HAMPSHIRE CODE OF ADMINISTRATIVE RULES OF THE BOARD OF LICENSURE FOR LAND SURVEYORS, EFFECTIVE 11/1/16.

DATE: 2-18-2021

STATE OF NEW HAMPSHIRE
NO. 849
GREGORY S. BROWN
LICENSED LAND SURVEYOR

GREGORY S. BROWN, LLS #849
For and on Behalf of
Fuss & O'Neill, Inc.

NO.	DATE	REVISION	DRAWN BY

FUSS & O'NEILL
50 COMMERCIAL STREET
MANCHESTER, NEW HAMPSHIRE 03101
603.668.8223
www.fando.com

CLIENT/DEED HOLDER:
EFI EXPRESS
61 THOMPSON MILL ROAD
LEE, NEW HAMPSHIRE
BOOK 4790 PAGE 951

PARTIAL BOUNDARY LAND OF EFI EXPRESS

TAX MAP PARCEL 0257-0066
TEBBETTS ROAD
ROCHESTER, NEW HAMPSHIRE
STRAFFORD COUNTY

PROJ. No.: 20200646A10
DATE: 10/19/2020
SCALE: 1"=100'

BD-101

EXISTING CONDITIONS PLAN NOTES:

1. REFER TO SHEETS GI-101, GI-102, AND GI-103 FOR RELATED PLAN NOTES.

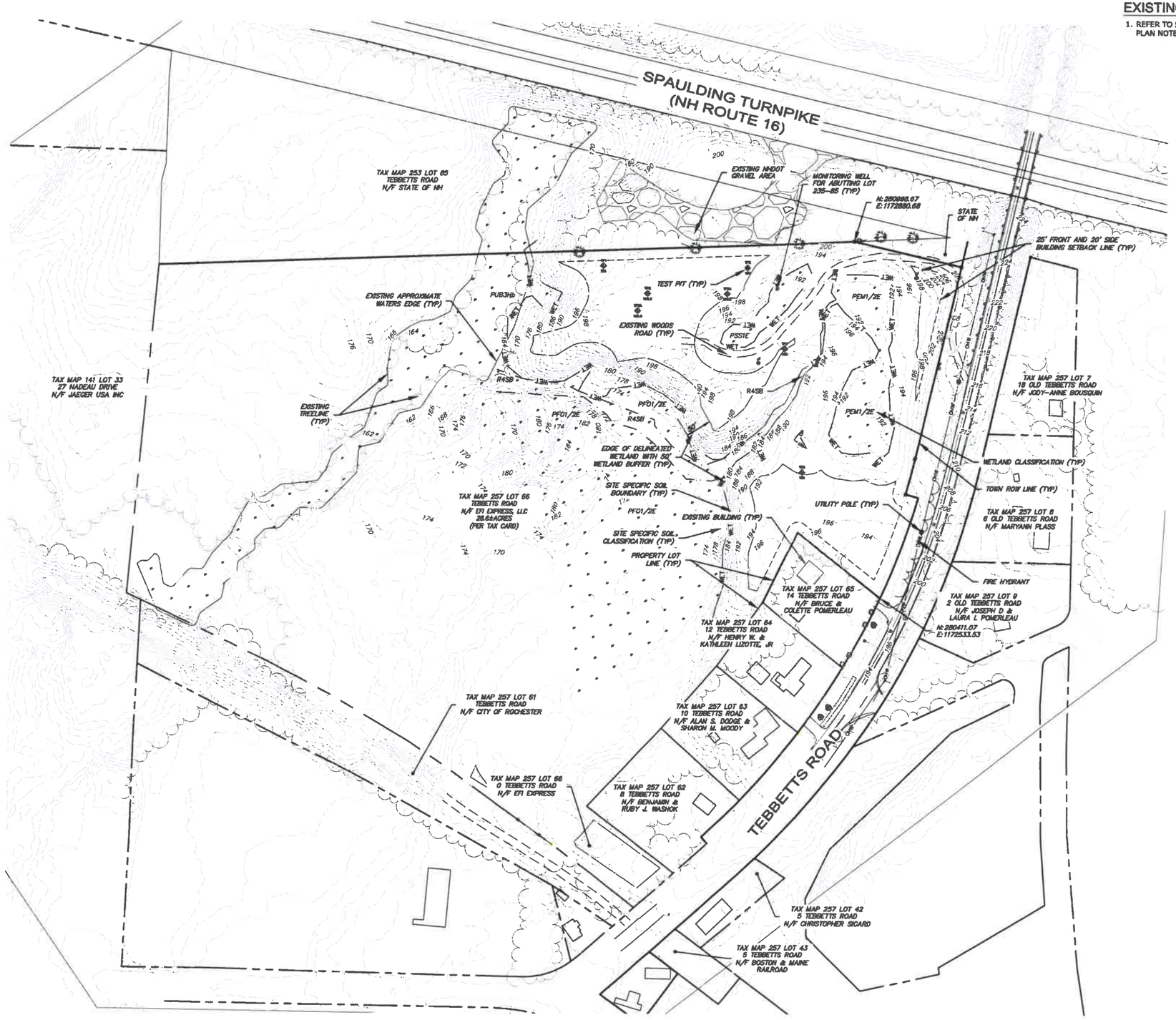

No.	DATE	DESCRIPTION	DESIGNER	REVIEWER
5.	10/26/2021	REVS PER NHDES	ACD	BAP
4.	09/21/2021	REVS PER NHF&G AND WETLANDS	ACD	BAP
3.	07/20/2021	REVS PER CITY, DES WETLANDS, AND F&G	ACD	BAP
2.	05/05/2021	REVS PER CITY TRG, PB, AOT,& WETLANDS	ACD	BAP
1.	03/15/2021	REVS PER CITY TRG COMMENTS	ACD	BAP

STATE OF NEW HAMPSHIRE
BRIAN ALPHONSE DUBOIS III
No. 11921
10/26/2021
LICENSED
PROFESSIONAL ENGINEER

SCALE: -
HORZ.: 1"=100'
VERT.:
DATUM: HORZ.: NAD83 - NH83
VERT.: NAVD88
0
GRAPHIC SCALE

FUSS & O'NEILL
50 COMMERCIAL STREET
MANCHESTER, NEW HAMPSHIRE 03101
603-695-1529
www.fuss&oneill.com

EFI EXPRESS
LOT OVERVIEW
EXISTING CONDITIONS PLAN
TAX MAP 257 LOT 66
TEBBETTS ROAD
ROCHESTER NEW HAMPSHIRE

PROJ. No.: 20200646.A10
DATE: JANUARY 2021

EX-101

File Path: J:\DWG\P2020\0646\A10\Civil\Plan\20200646.A10_EXC 2021-03.dwg Layout: EX-101 Plotted: Mon, November 15, 2021 - 2:22 PM User: adubois
MS VIEW: LAYER STATE: Plotter: DWG TO PDF.PC3 CTB File: FO.STB

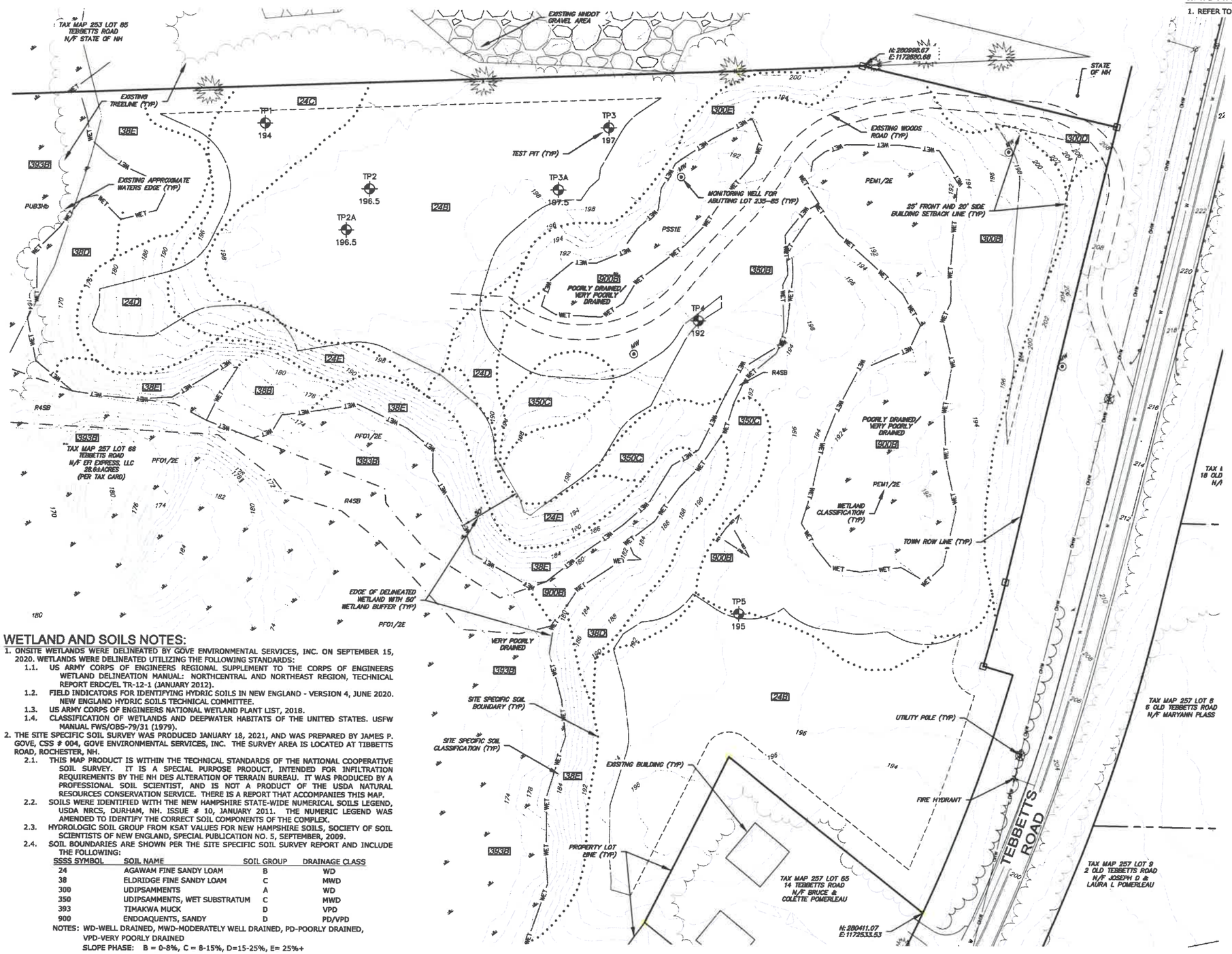

EXISTING CONDITIONS PLAN NOTES:

1. REFER TO SHEETS GI-101 AND GI-102 FOR RELATED PLAN NOTES.

WETLAND AND SOILS NOTES:

1. ONSITE WETLANDS WERE DELINEATED BY GOVE ENVIRONMENTAL SERVICES, INC. ON SEPTEMBER 15, 2020. WETLANDS WERE DELINEATED UTILIZING THE FOLLOWING STANDARDS:
   - 1.1. US ARMY CORPS OF ENGINEERS REGIONAL SUPPLEMENT TO THE CORPS OF ENGINEERS WETLAND DELINEATION MANUAL: NORTHCENTRAL AND NORTHEAST REGION, TECHNICAL REPORT ERDC/EL TR-12-1 (JANUARY 2012).
   - 1.2. FIELD INDICATORS FOR IDENTIFYING HYDRIC SOILS IN NEW ENGLAND - VERSION 4, JUNE 2020. NEW ENGLAND HYDRIC SOILS TECHNICAL COMMITTEE.
   - 1.3. US ARMY CORPS OF ENGINEERS NATIONAL WETLAND PLANT LIST, 2018.
   - 1.4. CLASSIFICATION OF WETLANDS AND DEEPWATER HABITATS OF THE UNITED STATES. USFW MANUAL FWS/OBS-79/31 (1979).
2. THE SITE SPECIFIC SOIL SURVEY WAS PRODUCED JANUARY 18, 2021, AND WAS PREPARED BY JAMES P. GOVE, CSS # 004, GOVE ENVIRONMENTAL SERVICES, INC. THE SURVEY AREA IS LOCATED AT TIBBETTS ROAD, ROCHESTER, NH.
   - 2.1. THIS MAP PRODUCT IS WITHIN THE TECHNICAL STANDARDS OF THE NATIONAL COOPERATIVE SOIL SURVEY. IT IS A SPECIAL PURPOSE PRODUCT, INTENDED FOR INFILTRATION REQUIREMENTS BY THE NH DES ALTERATION OF TERRAIN BUREAU. IT WAS PRODUCED BY A PROFESSIONAL SOIL SCIENTIST, AND IS NOT A PRODUCT OF THE USDA NATURAL RESOURCES CONSERVATION SERVICE. THERE IS A REPORT THAT ACCOMPANIES THIS MAP.
   - 2.2. SOILS WERE IDENTIFIED WITH THE NEW HAMPSHIRE STATE-WIDE NUMERICAL SOILS LEGEND, USDA NRCS, DURHAM, NH. ISSUE # 10, JANUARY 2011. THE NUMERIC LEGEND WAS AMENDED TO IDENTIFY THE CORRECT SOIL COMPONENTS OF THE COMPLEX.
   - 2.3. HYDROLOGIC SOIL GROUP FROM KSAT VALUES FOR NEW HAMPSHIRE SOILS, SOCIETY OF SOIL SCIENTISTS OF NEW ENGLAND, SPECIAL PUBLICATION NO. 5, SEPTEMBER, 2009.
   - 2.4. SOIL BOUNDARIES ARE SHOWN PER THE SITE SPECIFIC SOIL SURVEY REPORT AND INCLUDE THE FOLLOWING:

SSSS SYMBOL	SOIL NAME	SOIL GROUP	DRAINAGE CLASS
24	AGAWAM FINE SANDY LOAM	B	WD
38	ELDRIDGE FINE SANDY LOAM	C	MWD
300	UDIPSAMMENTS	A	WD
350	UDIPSAMMENTS, WET SUBSTRATUM	C	MWD
393	TIMAKWA MUCK	D	VPD
900	ENDOAQUENTS, SANDY	D	PD/VPD

NOTES: WD-WELL DRAINED, MWD-MODERATELY WELL DRAINED, PD-POORLY DRAINED, VPD-VERY POORLY DRAINED

SLOPE PHASE: B = 0-8%, C = 8-15%, D=15-25%, E= 25%+

No.	DATE	DESCRIPTION	DESIGNER	REVIEWER
5.	10/26/2021	REVS PER NHDES	ACD	BAP
4.	09/21/2021	REVS PER NHF&G AND WETLANDS	ACD	BAP
3.	07/20/2021	REVS PER CITY, DES WETLANDS, AND F&G	ACD	BAP
2.	05/05/2021	REVS PER CITY TRG, PB, AOT,& WETLANDS	ACD	BAP
1.	03/15/2021	REVS PER CITY TRG COMMENTS	ACD	BAP

STATE OF NEW HAMPSHIRE BRANDON ALPHONSE DUBOIS III No. 11921 10/26/2021 LICENSED PROFESSIONAL ENGINEER

SCALE:
HORZ.: 1"=40'
VERT.:
DATUM:
HORZ.: NAD83 - NH83
VERT.: NAVD88
GRAPHIC SCALE

FUSS & O'NEILL
50 COMMERCIAL STREET
MANCHESTER, NEW HAMPSHIRE 03101
603-695-8521
www.fuss&o'neill.com

EFI EXPRESS
SITE PAD
EXISTING CONDITIONS PLAN
TAX MAP 257 LOT 66
TEBBETTS ROAD
ROCHESTER NEW HAMPSHIRE

STATE OF NEW HAMPSHIRE BRENDEN M. WALDEN 3/15/2021 No. 297 CERTIFIED WETLAND SCIENTIST

STATE OF NEW HAMPSHIRE JAMES P. GOVE 3/15/2021 No. 004 CERTIFIED SOIL SCIENTIST

PROJ. No.: 20200646.A10
DATE: JANUARY 2021

EX-102

File Path: J:\DWG\P\20200646\A10\Civil\Plan\20200646.A10_EXC 2021-03.dwg Layout: EX-102 Plotted: Mon, November 15, 2021 - 1:29 PM User: adubois
Plotter: DWG TO PDF.PC3 CTB File: FO.STB
MS VIEW:
LAYER STATE:

DEMO PLAN NOTES:

1. REFER TO SHEETS G-101, GI-102, AND GI-103 FOR RELATED PLAN NOTES.

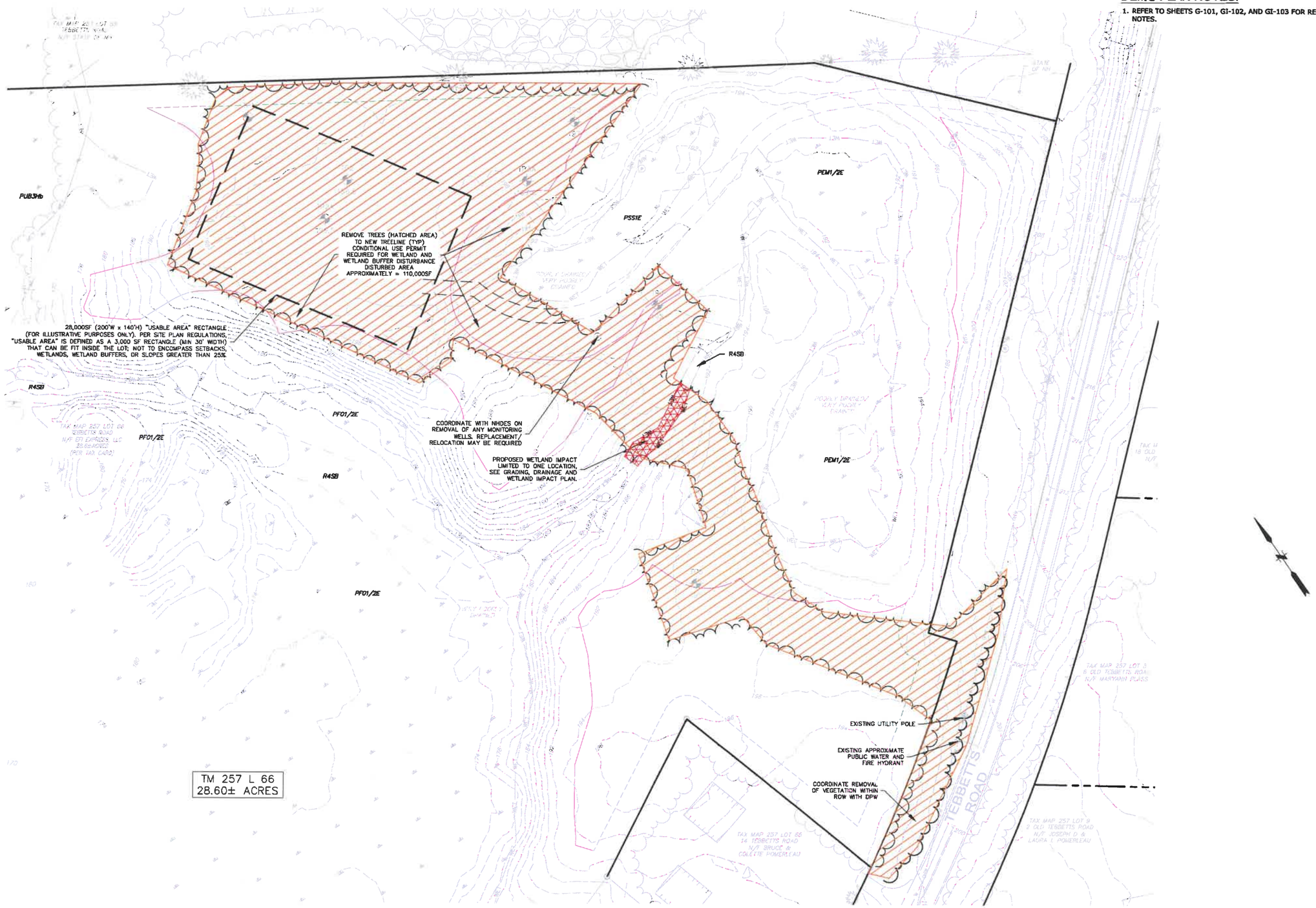

No.	DATE	DESCRIPTION	DESIGNER	REVIEWER
5.	10/26/2021	REVS PER NHDES	ACD	BAP
4.	09/21/2021	REVS PER NHF&G AND WETLANDS	ACD	BAP
3.	07/20/2021	REVS PER CITY, DES WETLANDS, AND F&G	ACD	BAP
2.	05/05/2021	REVS PER CITY TRG, PB, AOT,& WETLANDS	ACD	BAP
1.	03/15/2021	REVS PER CITY TRG COMMENTS	ACD	BAP

STATE OF NEW HAMPSHIRE
ADAM C. DUBOIS
No. 11921
10/26/2021
LICENSED PROFESSIONAL ENGINEER

SCALE:
HORZ.: 1"=40'
VERT.:
DATUM:
HORZ.: NAD83 - NH83
VERT.: NAVD88
40 20 0 40
GRAPHIC SCALE

FUSS & O'NEILL
50 COMMERCIAL STREET
MANCHESTER, NEW HAMPSHIRE 03101
603.695.8020
www.fuss&oneill.com

EFI EXPRESS
SITE PAD
DEMOLITION PLAN
TAX MAP 257 LOT 66
TEBBETTS ROAD
ROCHESTER NEW HAMPSHIRE

PROJ. No.: 20200646.A10
DATE: JANUARY 2021

CP-101

File Path: J:\DWG\P2020\0646\A10\Civil\Plan\20200646.A10_STP 2021-03.dwg Layout: CP-101 Plotted: Mon, November 15, 2021 - 1:30 PM User: adubois
MS VIEW: LAYER STATE: Plotter: DWG TO PDF.PC3 CTB File: FO.STB

SITE PLAN NOTES:

1. REFER TO SHEETS G-101, GI-102, AND GI-103 FOR RELATED PLAN NOTES.

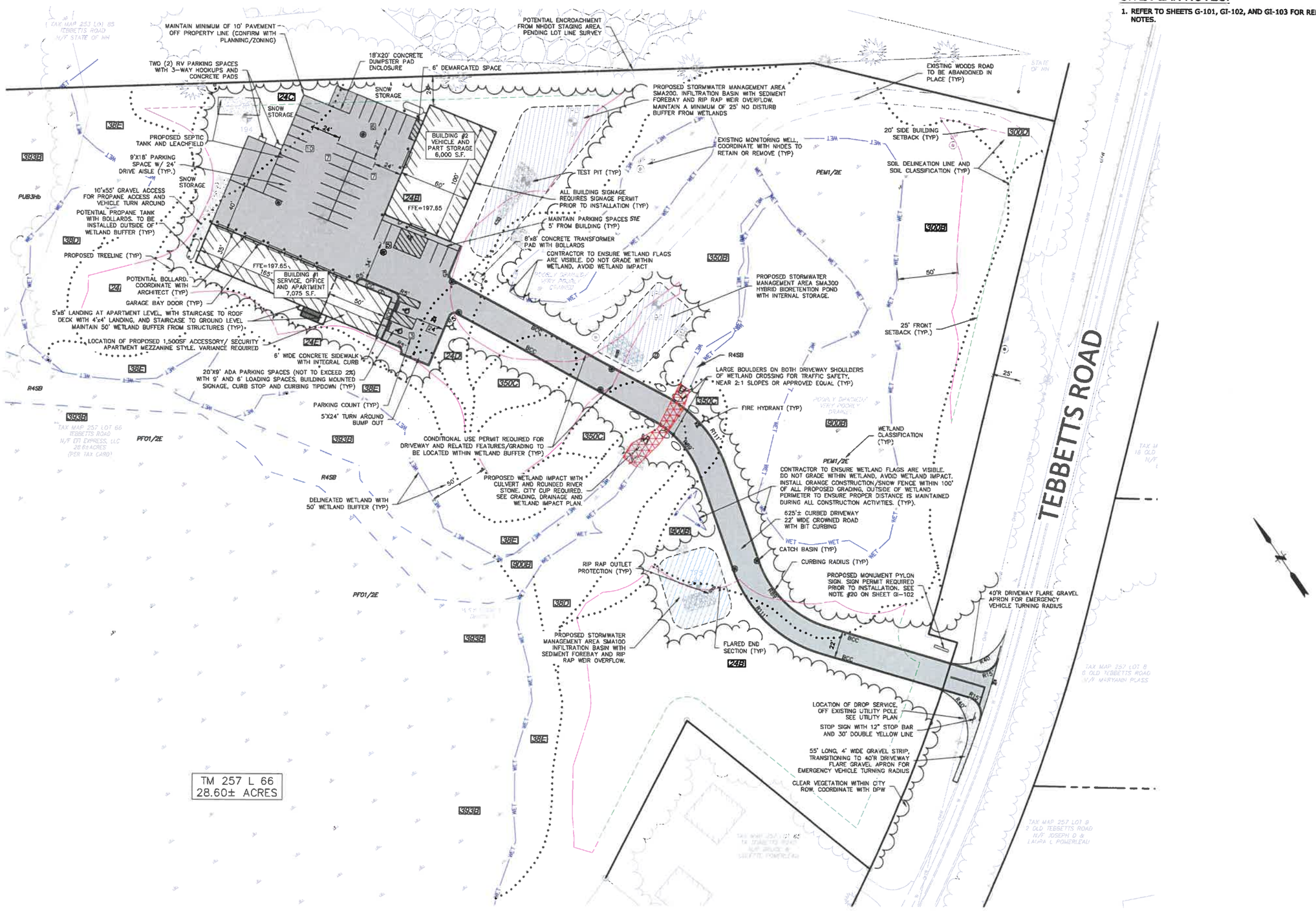

No.	DATE	DESCRIPTION	DESIGNER	REVIEWER
5.	10/26/2021	REVS PER NHDES	ACD	BAP
4.	09/21/2021	REVS PER NHF&G AND WETLANDS	ACD	BAP
3.	07/20/2021	REVS PER CITY, DES WETLANDS, AND F&G	ACD	BAP
2.	05/03/2021	REVS PER CITY TRG, FB, AOT,& WETLANDS	ACD	BAP
1.	03/15/2021	REVS PER CITY TRG COMMENTS	ACD	BAP

STATE OF NEW HAMPSHIRE
ADAMO ALPHONSE DUBOIS III
No. 11821
10/26/2021
LICENSED
PROFESSIONAL ENGINEER

SCALE:
HORZ.: 1"=40'
VERT.:
DATUM:
HORZ.: NAD83 - NH83
VERT.: NAVD88
40 20 0 40
GRAPHIC SCALE

FUSS & O'NEILL
50 COMMERCIAL STREET
MANCHESTER, NEW HAMPSHIRE 03101
603-695-8000
www.fuss&oneill.com

EFI EXPRESS
SITE PAD
SITE PLAN
TAX MAP 257 LOT 66
TEBBETTS ROAD
ROCHESTER NEW HAMPSHIRE

PROJ. No.: 20200646.A10
DATE: JANUARY 2021

CS-101

File Path: J:\DWG\P2020\0646\A10\Civil\Plan\20200646.A10_STP 2021-03.dwg Layout: CS-101 Plotted: Mon, November 15, 2021 - 1:30 PM User: mdubois
MS VIEW: LAYER STATE: Plotter: DWG TO PDF.PC3 CTB File: FO.STB

DRIVEWAY PROFILE NOTES:

1. REFER TO SHEETS G-101, GI-102, AND GI-103 FOR RELATED PLAN NOTES.

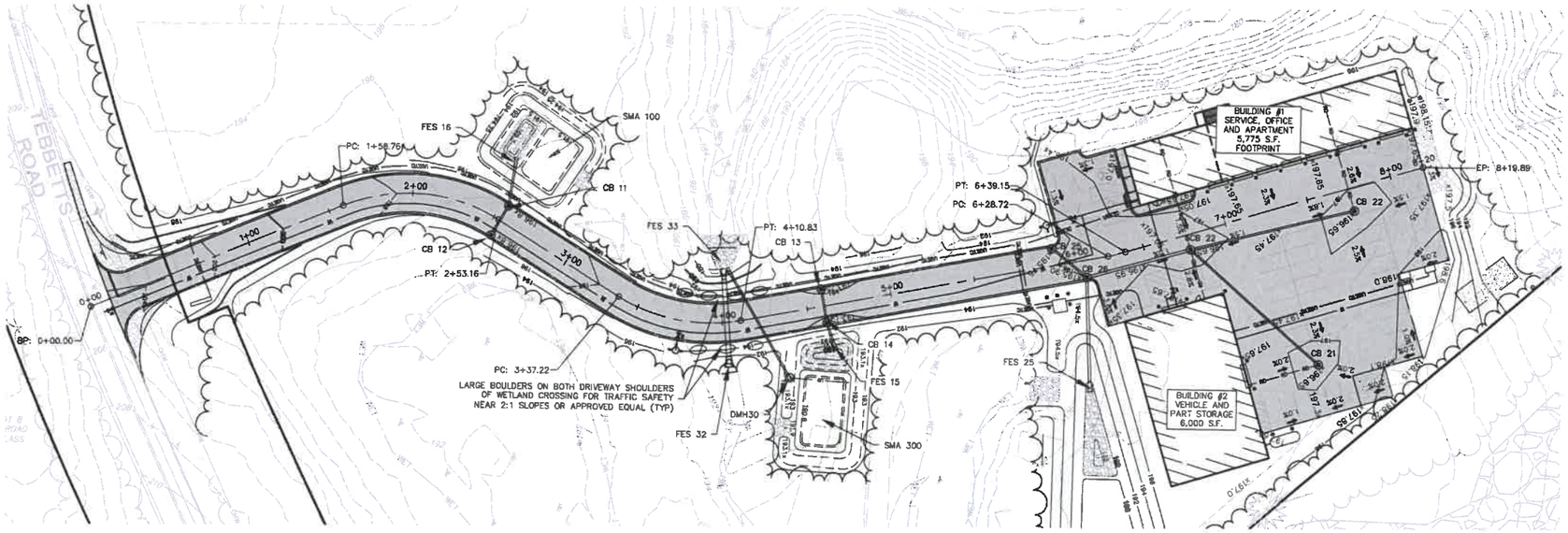

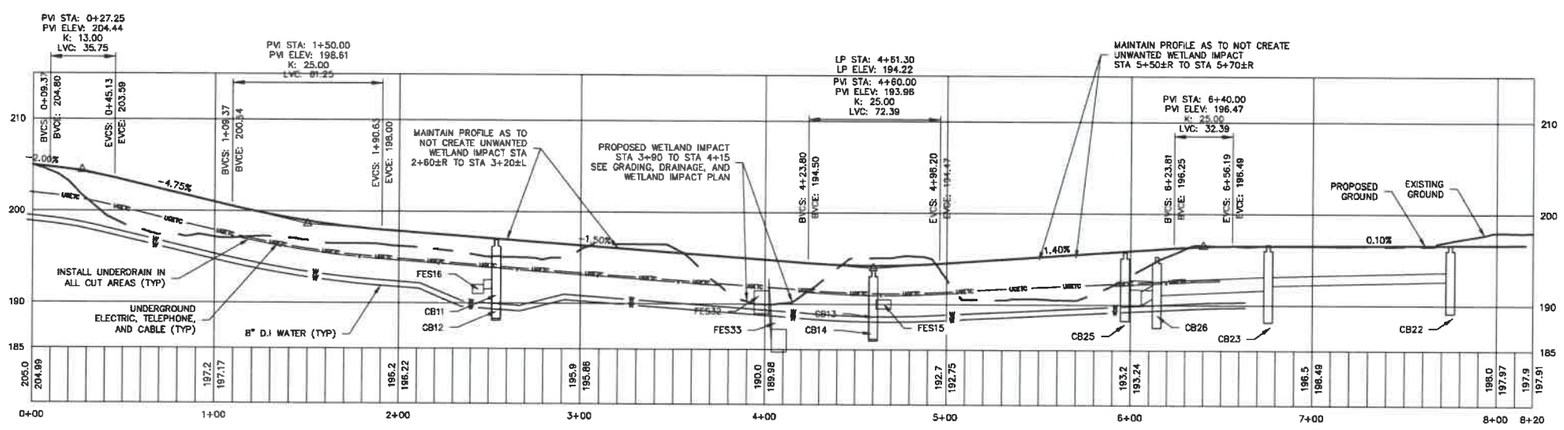

DRIVEWAY PROFILE

H: 1"=40' V: 1"=8'

No.	DATE	DESCRIPTION	DESIGNER	REVIEWER
5.	10/28/2021	REVS PER NHDES	ACD	BAP
4.	08/21/2021	REVS PER NHF&G AND WETLANDS	ACD	BAP
3.	07/20/2021	REVS PER CITY, DES WETLANDS, AND F&G	ACD	BAP
2.	05/05/2021	REVS PER CITY TRG, PB, AOT,& WETLANDS	ACD	BAP
1.	03/15/2021	REVS PER CITY TRG COMMENTS	ACD	BAP

STATE OF NEW HAMPSHIRE ARMAND ALPHONSE DUBOIS III No. 11921 10/26/2021 LICENSED PROFESSIONAL ENGINEER

SCALE:
HORZ.: 1"=40'
VERT.:
DATUM:
HORZ.: NAD83 - NH83
VERT.: NAVD88
40 20 0 40
GRAPHIC SCALE

FUSS & O'NEILL
50 COMMERCIAL STREET
MANCHESTER, NEW HAMPSHIRE 03101
(603) 668-8223
www.fuss-o.com

EFI EXPRESS
SITE PAD
DRIVEWAY PROFILE
TAX MAP 257 LOT 66
TEBBETTS ROAD
ROCHESTER NEW HAMPSHIRE

PROJ. No.: 20200646.A10
DATE: JANUARY 2021

CR-101

File Path: J:\DWG\P2020\0646\A10\Civil\Plan\20200646.A10_STP 2021-03.dwg Layout: CR-101 Plotted: Mon, November 15, 2021 - 1:30 PM User: adubois
MS VIEW: LAYER STATE: Plotter: DWG TO PDF.PC3 CTB File: FO.STB

TRAFFIC CIRCULATION PLAN NOTES:

1. REFER TO SHEETS G-101, GI-102, AND GI-103 FOR RELATED PLAN NOTES.

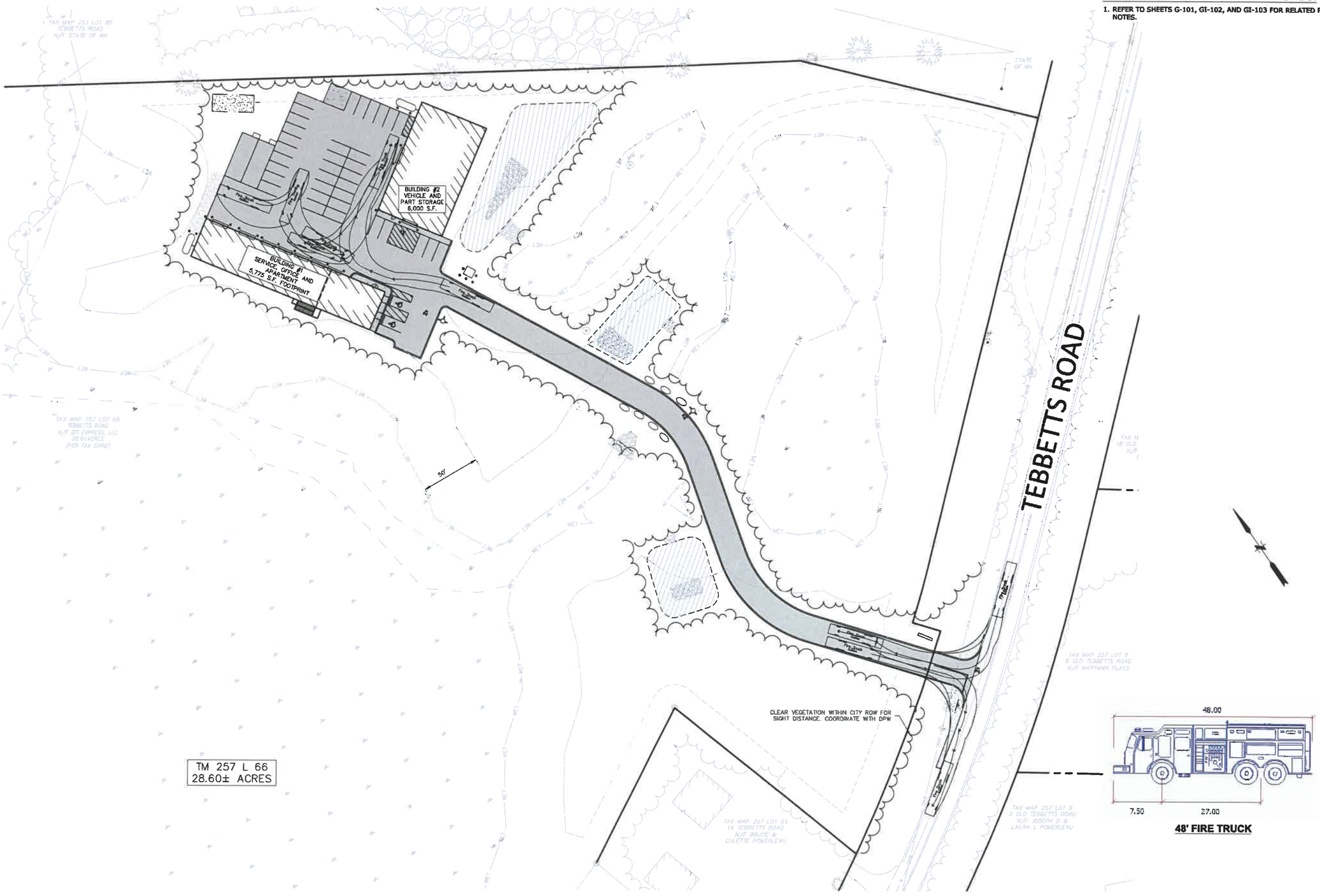

48' FIRE TRUCK

No.	DATE	DESCRIPTION	DESIGNER	REVIEWER
5.	10/28/2021	REVS PER NHDES	ACD	BAP
4.	09/21/2021	REVS PER NHF&G AND WETLANDS	ACD	BAP
3.	07/20/2021	REVS PER CITY, DES WETLANDS, AND F&G	ACD	BAP
2.	05/05/2021	REVS PER CITY TRG, PB, ACI,& WETLANDS	ACD	BAP
1.	03/15/2021	REVS PER CITY TRG COMMENTS	ACD	BAP

STATE OF NEW HAMPSHIRE
BRIAN A. PHONSIE
DUBOIS III
No. 11921
10/25/2021
LICENSED
PROFESSIONAL ENGINEER

SCALE:
HORZ.: 1"=40'
VERT.:
DATUM:
HORZ.: NAD83 - NH83
VERT.: NAVD88
40 20 0 40
GRAPHIC SCALE

FUSS & O'NEILL
30 COMMERCIAL STREET
MANCHESTER, NEW HAMPSHIRE 03101
603-668-8223
www.fuss&oneill.com

EFI EXPRESS
SITE PAD
TRAFFIC CIRCULATION
PLAN
TAX MAP 257 LOT 66
TEBBETTS ROAD
ROCHESTER NEW HAMPSHIRE

PROJ. No.: 20200646.A10
DATE: JANUARY 2021

CT-101

File Path: J:\DWG\P2020\0646\A10\Civil\Plan\20200646.A10_STP 2021-03.dwg Layout: CT-101 Plotted: Mon, November 15, 2021 - 1:31 PM User: adubois
MS VIEW: LAYER STATE: Plotter: DWG TO PDF.PC3 CTB File: FO.STB

SIGHT DISTANCE LEFT

SIGHT DISTANCE RIGHT

SITE DISTANCE PROFILE NOTES:

1. PURPOSE OF THIS PLAN: TO ILLUSTRATE SIGHT DISTANCE AT THE PROPOSED DRIVEWAY INTERSECTION AT TEBBETTS ROAD.
2. DESIGN CRITERIA IS BASED ON SECTION 14.C OF THE CITY OF ROCHESTER SITE PLAN REGULATIONS, REQUIREMENT OF A MINIMUM OF 250' SIGHT DISTANCE IN A 35MPH ZONE.
3. ADDITIONAL DESIGN CRITERIA IS BASED ON "A POLICY ON GEOMETRIC DESIGN OF HIGHWAYS AND STREETS" 6TH EDITION, AASHTO RELEASED 2011. PER CHAPTER 9.5 INTERSECTION SIGHT DISTANCE:
   - 3' 6" ABOVE THE PAVEMENT FOR DRIVER'S EYE AND ROADWAY OBJECT
   - DECISION POINT IS 10' FROM THE EDGE OF ROAD PAVEMENT
   - REQUIRED LEFT SIGHT DISTANCE IS 250' @35MPH
   - ILLUSTRATED LEFT SIGHT DISTANCE IS 400'+
   - REQUIRED RIGHT SIGHT DISTANCE IS 250' @35MPH
   - ILLUSTRATED RIGHT SIGHT DISTANCE IS 400'+
4. IT SHALL BE THE PROPERTY OWNER'S RESPONSIBILITY TO MAINTAIN ALL SEASON SIGHT DISTANCE VISIBILITY BY TRIMMING OF VEGETATION AS NEEDED/REQUIRED AND PROPER ONSITE SNOW REMOVAL/STORAGE.
5. PE STAMP ENDORSES PROPOSED CONDITIONS BASED ON PROVIDED INFORMATION FOR SIGHT DISTANCE OF SURVEYED INFORMATION AND CONDITIONS ONLY.
6. REFER TO THE PROPOSED PLAN SET FOR FULL DESIGN AND NOTES

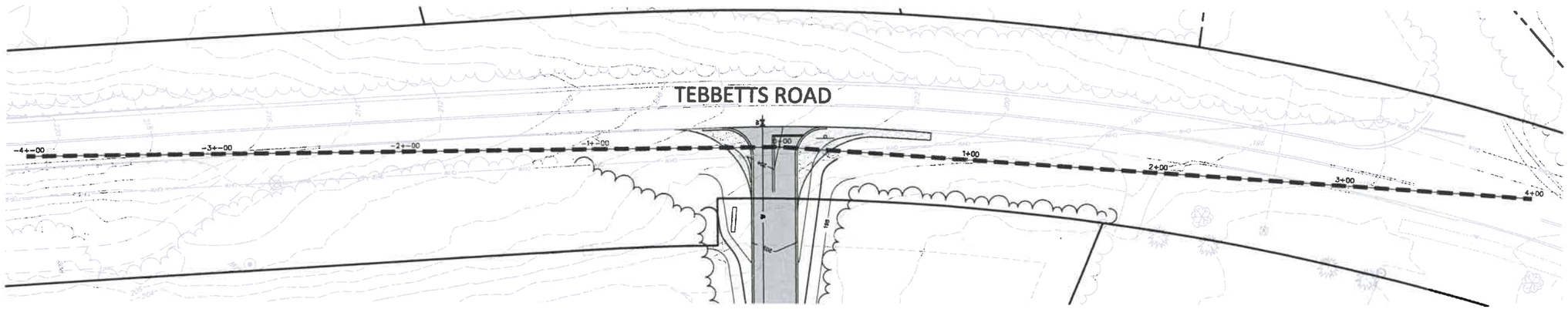

SIGHT DISTANCE PLAN VIEW 1"=30'
PROPOSED DRIVEWAY
TAX MAP 257 LOT 66 - TEBBETTS ROAD

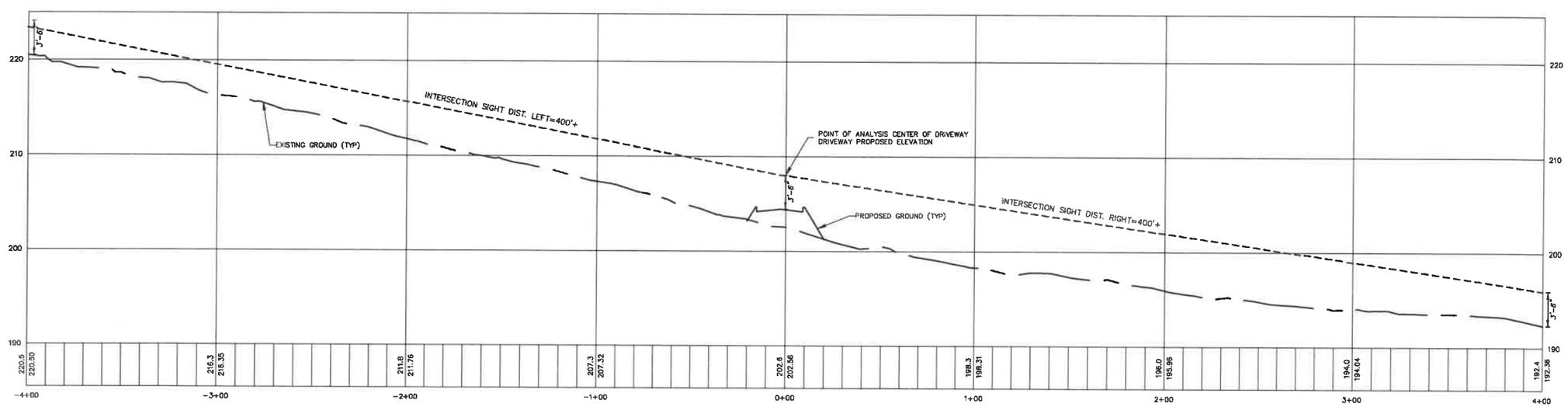

SIGHT DISTANCE PROFILE
H: 1"=30'
V: 1"=6'

No.	DATE	DESCRIPTION	DESIGNER	REVIEWER
5.	10/28/2021	REVS PER NHDES	ACD	BAP
4.	09/21/2021	REVS PER NHF&G AND WETLANDS	ACD	BAP
3.	07/20/2021	REVS PER CITY, DES WETLANDS, AND F&G	ACD	BAP
2.	05/05/2021	REVS PER CITY TRG, PB, AOT,& WETLANDS	ACD	BAP
1.	03/15/2021	REVS PER CITY TRG COMMENTS	ACD	BAP

STATE OF NEW HAMPSHIRE
ARMANDO ALPHONSE DUBOIS III
No. 11921
10/28/2021
LICENSED
PROFESSIONAL ENGINEER

SCALE:
HORZ.: 1"=30'
VERT.: 1"=6'
DATUM:
HORZ.: NAD83 - NH83
VERT.: NAVD88
30 15 0 30
GRAPHIC SCALE

FUSS & O'NEILL
50 CONGRESS STREET
MANCHESTER, NEW HAMPSHIRE 03101
603.695.1529
www.fando.com

EFI EXPRESS
SITE PAD
TRAFFIC DRIVEWAY
SIGHT- DISTANCE PLAN
TAX MAP 257 LOT 66
TEBBETTS ROAD
ROCHESTER NEW HAMPSHIRE

PROJ. No.: 20200646.A10
DATE: JANUARY 2021

CT-102

File Path: J:\DWG\P2020\0646\A10\Civil\Plan\20200646.A10_STP 2021-03.dwg Layout: CT-102 Plotted: Mon, November 15, 2021 - 1:31 PM User: adubois
MS VIEW: LAYER STATE: Plotter: DWG TO PDF.PC3 CTB File: FO.STB

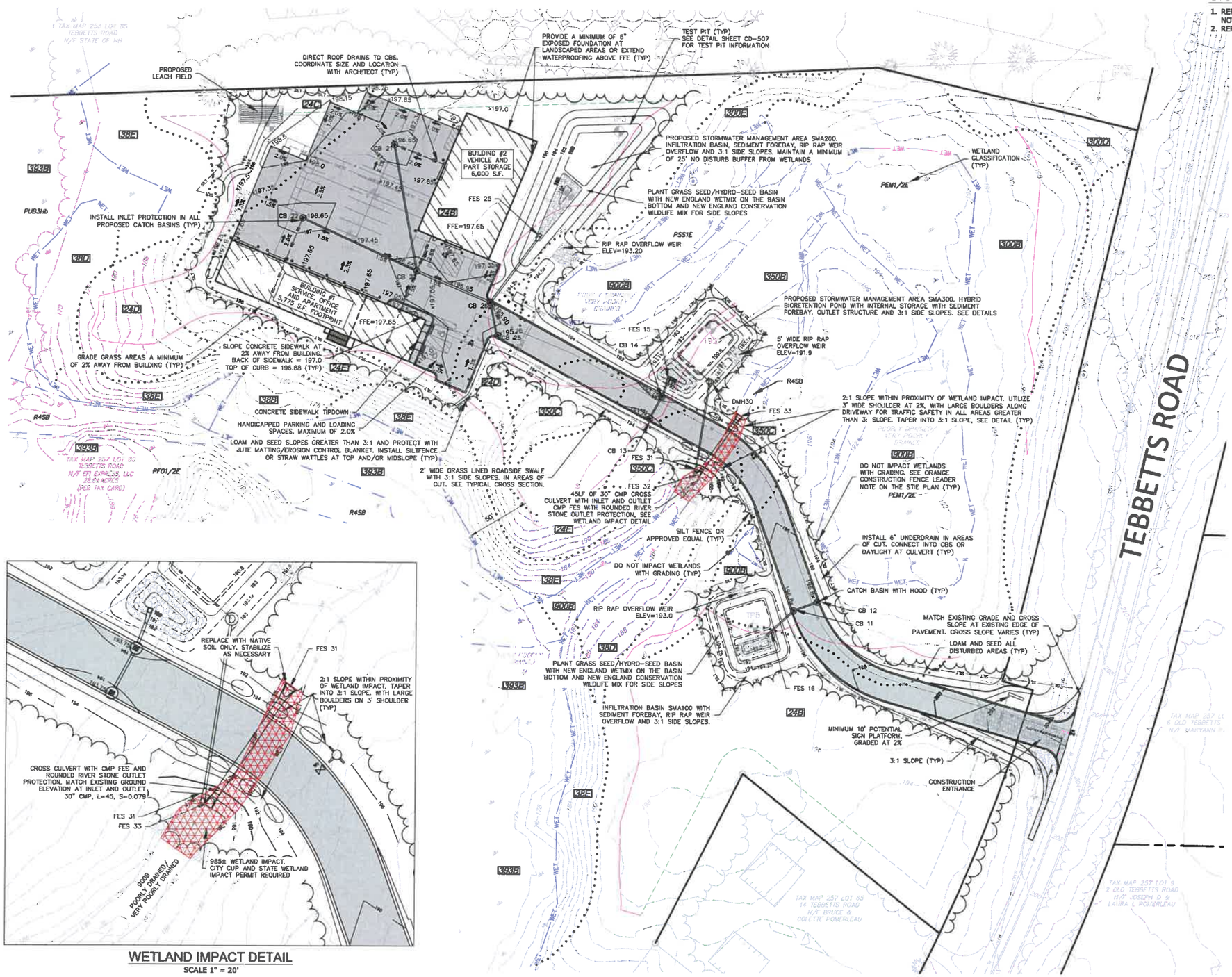

WETLAND IMPACT DETAIL

SCALE 1" = 20'

GRADING PLAN NOTES:

1. REFER TO SHEETS G-101, GI-102, AND GI-103 FOR RELATED PLAN NOTES.
2. REFER TO SHEET GI-101 FOR DRAINAGE SCHEDULE.

DRAINAGE PIPE TABLE

FROM	INV OUT	TO	INV IN	L (FT)	SLOPE	DIA.	TYPE
FES33	190.20	FES32	186.00	45	0.093	30"	CMP
CB11	191.60	FES16	191.50	23	0.004	12"	HDPE
CB12	191.80	CB11	191.70	20	0.005	12"	HDPE
CB13	189.70	CB14	189.60	20	0.005	12"	HDPE
CB14	189.50	FES15	189.45	11	0.005	12"	HDPE
CB21	192.65	CB23	192.15	101	0.005	12"	HDPE
CB22	192.65	CB23	192.15	99	0.005	12"	HDPE
CB23	191.65	CB26	191.10	63	0.009	18"	HDPE
CB25	191.75	CB26	191.60	27	0.005	12"	HDPE
CB26	191.00	FES25	190.00	61	0.016	18"	HDPE
DMH30	190.80	FES31	188.05	67	0.071	12"	HDPE

DRAINAGE STRUCTURE TABLE

STRUCTURE	RIM	DIA.
CB11	196.9	4
CB12	196.8	4
CB13	193.7	4
CB14	193.7	4
CB21	196.6	4
CB22	196.6	4
CB23	196.6	4
CB25	195.8	4
CB26	195.3	4
DMH30	193.0	N/A
FES15	191.5	N/A
FES16	190.0	N/A
FES25	190.6	N/A
FES31	190.2	N/A
FES32	186.0	N/A
FES33	192.1	N/A

No.	DATE	DESCRIPTION	DESIGNER	REVIEWER
5.	10/29/2021	REVS PER NHDES	ACD	BAP
4.	09/21/2021	REVS PER NHF&G AND WETLANDS	ACD	BAP
3.	07/20/2021	REVS PER CITY, DES WETLANDS, AND F&G	ACD	BAP
2.	05/05/2021	REVS PER CITY TRC, PB, AOT,& WETLANDS	ACD	BAP
1.	03/15/2021	REVS PER CITY TRC COMMENTS	ACD	BAP

STATE OF NEW HAMPSHIRE — BRIAN ALPHONSE DUBOIS III — No. 11921 — 10/29/2021 — LICENSED PROFESSIONAL ENGINEER

SCALE:
HORZ.: 1"=40'
VERT.:
DATUM:
HORZ.: NAD83 - NH83
VERT.: NAVD88
40 20 0 40
GRAPHIC SCALE

FUSS & O'NEILL
50 COMMERCIAL STREET
MANCHESTER, NEW HAMPSHIRE 03101
(603) 695-8721
www.fando.com

EFI EXPRESS
SITE PAD GRADING, DRAINAGE, EROSION CONTROL, AND WETLAND IMPACT PLAN
TAX MAP 257 LOT 66
TEBBETTS ROAD
ROCHESTER NEW HAMPSHIRE

STATE OF NEW HAMPSHIRE — BRENDEN M. WALDEN — No. 297 — 3/15/2021 — CERTIFIED WETLAND SCIENTIST

STATE OF NEW HAMPSHIRE — JAMES P. GOVE — 3/15/2021 — LICENSED LAND SURVEYOR

PROJ. No.: 20200646.A10
DATE: JANUARY 2021

CG-101

File Path: J:\DWG\P2020\0646\A10\Civil\Plan\20200646.A10_STP 2021-03.dwg Layout: CG-101 Plotted: Mon, November 15, 2021 - 1:31 PM User: edubois
Plotter: DWG TO PDF.PC3 CTB File: FO.STB
MS VIEW:
LAYER STATE:

UTILITY PLAN NOTES:

1. REFER TO SHEETS G-101, GI-102, AND GI-103 FOR RELATED PLAN NOTES.

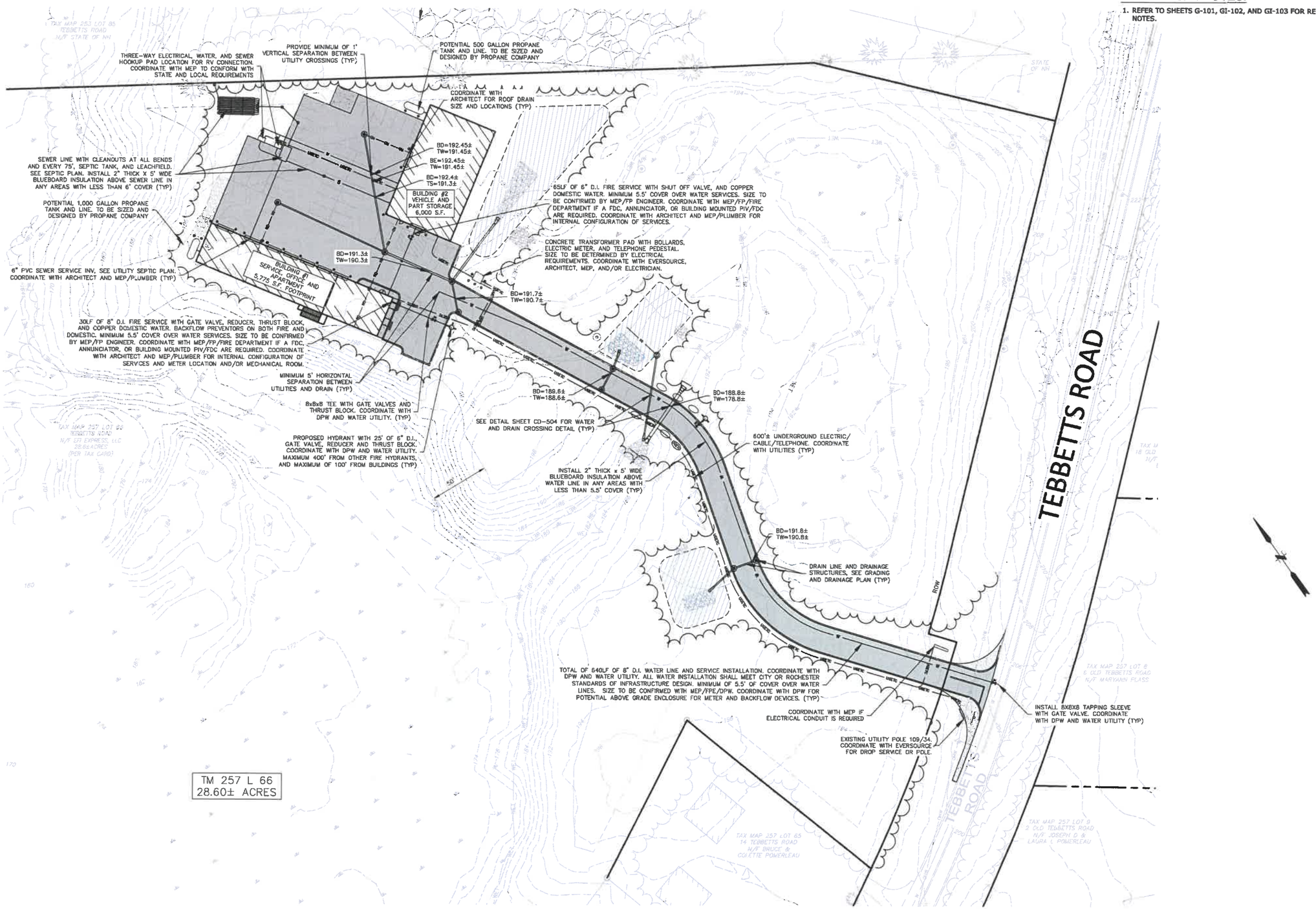

No.	DATE	DESCRIPTION	DESIGNER	REVIEWER
5.	10/28/2021	REVS PER NHDES	ACD	BAP
4.	09/21/2021	REVS PER NHFAG AND WETLANDS	ACD	BAP
3.	07/20/2021	REVS PER CITY, DES WETLANDS, AND F&G	ACD	BAP
2.	05/05/2021	REVS PER CITY TRG, PB, AOF,& WETLANDS	ACD	BAP
1.	03/15/2021	REVS PER CITY TRG COMMENTS	ACD	BAP

STATE OF NEW HAMPSHIRE
ANANDU NEPHONSE DUBOIS III
No. 11821
10/26/2021
LICENSED
PROFESSIONAL ENGINEER

SCALE:
HORZ.: 1"=40'
VERT.:
DATUM:
HORZ.: NAD83 - NH83
VERT.: NAVD88
40 20 0 40
GRAPHIC SCALE

FUSS & O'NEILL
50 COMMERCIAL STREET
MANCHESTER, NEW HAMPSHIRE 03101
603-668-8223
www.fuss&oneill.com

EFI EXPRESS
SITE PAD
UTILITY PLAN
TAX MAP 257 LOT 66
TEBBETTS ROAD
ROCHESTER NEW HAMPSHIRE

PROJ. No.: 20200646.A10
DATE: JANUARY 2021

CU-101

File Path: J:\DWG\P2020\0646\A10\Civil\Plan\20200646.A10_STP 2021-03.dwg Layout: CU-101 Plotted: Mon, November 15, 2021 - 1:31 PM User: adubois
MS VIEW: LAYER STATE: Plotter: DWG TO PDF.PC3 CTB File: FO.STB

LIGHTING PLAN NOTES:

1. REFER TO SHEETS G-101, GI-102, AND GI-103 FOR RELATED PLAN NOTES.

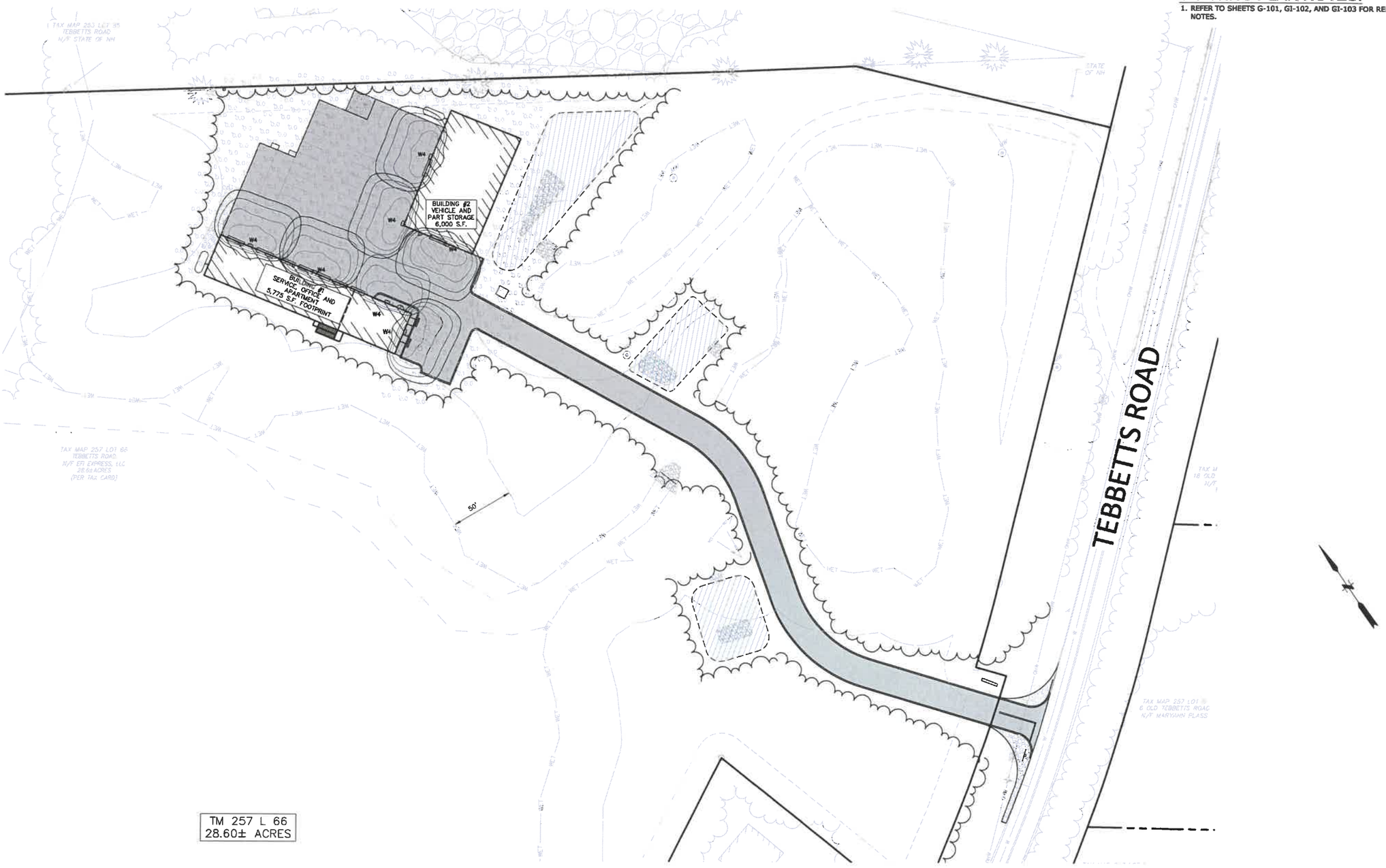

Luminaire Schedule				
Symbol	Qty	Label	Arrangement	Description
	7	W4	SINGLE	GWC-AF-01-LED-E1-SL4-600/ WALL MTD 12' AFG

StatArea
Illuminance (Fc)
Average = 1.03
Maximum = 3.8
Minimum = 0.0
Avg/Min Ratio = N.A.
Max/Min Ratio = N.A.

No.	DATE	DESCRIPTION	DESIGNER	REVIEWER
5.	10/26/2021	REVS PER NHDES	ACD	BAP
4.	09/21/2021	REVS PER NHF&G AND WETLANDS	ACD	BAP
3.	07/20/2021	REVS PER CITY, DES WETLANDS, AND F&G	ACD	BAP
2.	05/05/2021	REVS PER CITY TRG, PB, AOT,& WETLANDS	ACD	BAP
1.	03/15/2021	REVS PER CITY TRG COMMENTS	ACD	BAP

STATE OF NEW HAMPSHIRE
ANDREW C. PHONSIE
DUBOIS III
No. 11921
10/26/2021
LICENSED
PROFESSIONAL ENGINEER

SCALE: 1"=40'
HORZ.:
VERT.:
DATUM:
HORZ.: NAD83 - NH83
VERT.: NAVD88
40 20 0 40
GRAPHIC SCALE

FUSS & O'NEILL
50 COMMERCIAL STREET
MANCHESTER, NEW HAMPSHIRE 03101
(603) 668-8223
www.fuss-o'neill.com

EFI EXPRESS
SITE PAD
UTILITY LIGHTING PLAN
TAX MAP 257 LOT 66
TEBBETTS ROAD
ROCHESTER NEW HAMPSHIRE

PROJ. No.: 20200646.A10
DATE: JANUARY 2021

CU-102

File Path: J:\DWG\P2020\0646\A10\Civil\Plan\20200646.A10_STP 2021-03.dwg Layout: CU-102 Plotted: Mon, November 15, 2021 - 1:32 PM User: adubois
MS VIEW: LAYER STATE: Plotter: DWG TO PDF.PC3 CTB File: FO.STB

"THE ADVANCED ENVIRO-SEPTICS LEACHING SYSTEM"

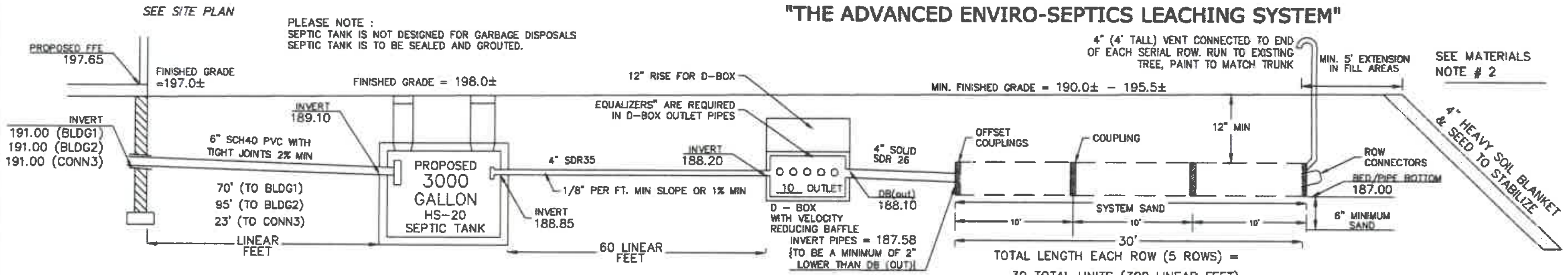

SEPTIC SYSTEM PROFILE CROSS SECTION

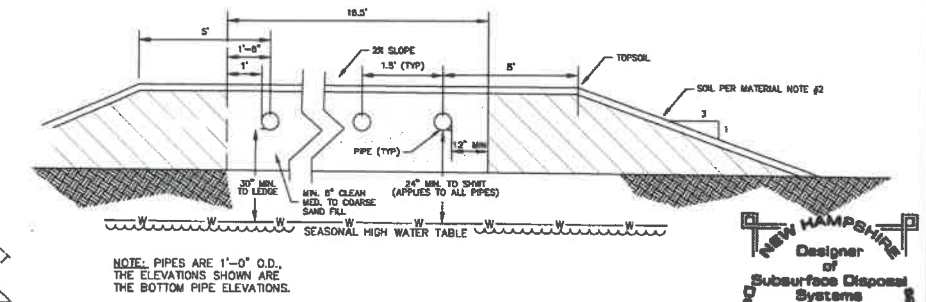

SEPTIC SYSTEM CROSS SECTION

NEW HAMPSHIRE Designer of Subsurface Disposal Systems ★★★ Brian A. Pratt No. 1614 Department Services

SUPPLIERS

1. ADVANCED ENVIRO-SEPTICS SYSTEM TO BE PROVIDED BY TUFFCRETE CORP. OR EQUAL (603-485-1969).
2. EQUALIZERS TO BE SUPPLIED BY POLYLOK OR EQUAL (1-800-234-3119).
3. SEPTIC TANK AND D-BOX TO BE PROVIDED SHEA CONCRETE OR EQUAL

MATERIAL NOTES:

CONCRETE STRUCTURES:

1. USE POLY-LOK INSERTS OR HYDRAULIC COMPOUND CONNECTIONS TO PROVIDE WATER TIGHTNESS AT SEPTIC TANK AND DISTRIBUTION BOX INLETS AND OUTLETS. SEPTIC TANK CONSTRUCTION JOINTS SHALL BE SEALED WITH ASPHALT CEMENT OR BITUMASTIC SEALANT.
2. TOPSOIL TO BE REMOVED PRIOR TO PLACING FILL AND BACKFILL SHALL COMPLY WITH N.H.D.E.S. ENV.-WS 1014.11.
3. THE GRADES SHOWN ARE THE MINIMUM ELEVATIONS ALLOWED. THE INSTALLER, AT HIS DISCRETION, MAY RAISE THE FINISHED GRADES PROVIDED THE BED BOTTOM ELEVATION REMAIN AS SHOWN, VENTING WILL BE REQUIRED IF FILL OVER LEACH FIELD IS GREATER THAN 18"

NOTES:

1. SETBACKS:

COMPONENT	SETBACK TO SEPTIC TANK	SETBACK TO SEPTIC BED
OPEN DRAINAGE	75'	75'
CULVERT	10'	25'
CATCH BASIN	35'	35'
WATER LINE	10'	25'
PROPERTY LINE	5'	10'
FOUNDATION WITH DRAIN	5'	15'
STORMWATER POND NOT INTERCEPTING SHWT	25'	35'
POORLY DRAINED SOILS	50'	50'
VERY POORLY DRAINED SOILS	75'	75'

2. LOAM BARRIER TO BE CONSTRUCTED AROUND THE PERIMETER OF FILL IN RAISED AREAS OF LEACH FIELD
3. SYSTEM WILL BE REBUILT IN PLACE IF FAILURE OCCURS.
4. THE INSTALLER IS TO BE RESPONSIBLE FOR HORIZONTAL AND VERTICAL CONTROL OF ALL SYSTEM COMPONENTS.
5. THE SYSTEM IS NOT DESIGNED FOR GARBAGE DISPOSAL UNLESS SO NOTED IN THE CALCULATION SECTION.
6. BUILDING LOCATIONS ARE GRAPHIC ONLY, PROPERTY LINES NOT HAVING BEEN VERIFIED, NO REPRESENTATION OR CERTIFICATION AS TO ACCURACY OF THOSE SHOWN IS IMPLIED OR INTENDED AND ARE BASED ON TAXMAP ONLY
7. THE PLAN SHOWS ONLY THOSE FEATURES THAT WERE VISUALLY APPARENT ON THE DATE OF THE TOPOGRAPHIC SURVEY AND THE ABSENCE OF SUBSURFACE STRUCTURES, UTILITIES, ETC. IS NOT INTENDED OR IMPLIED.
8. THERE ARE NO EXISTING OR PROPOSED WELLS WITHIN 75' FEET OF THE PROPOSED SEPTIC DISPOSAL SYSTEM UNLESS OTHERWISE NOTED.
9. WHEN IT IS POSSIBLE SEPTIC COMPONENTS WILL BE SUSCEPTIBLE TO VEHICULAR TRAFFIC, THEY SHALL BE UPGRADED TO A MINIMUM OF HS-20 AASHTO LOADING REQUIREMENTS.
10. ALL TREES, BUSHES, BOULDERS, TOP SOIL AND DEBRIS MUST BE REMOVED PRIOR TO PLACING FILL THROUGH THE LEACH FIELD AREA. THIS INCLUDES THE AREA BELOW THE LEACH FIELD, THE FILL EXTENSION AND THE SLOPED EMBANKMENT.
11. FINISHED SURFACE OF THE LEACHING AREA SHALL BE GRADED TO ACHIEVE WATER RUNOFF (2% MINIMUM SLOPE RECOMMENDED).
12. THE SEPTIC TANK SHOULD BE PERIODICALLY INSPECTED AND SHOULD BE PUMPED WHEN SLUDGE IN THE BOTTOM EXCEEDS 1/4 OF THE DEPTH.
13. ALL WORK IS TO COMPLY WITH THE STATE OF NEW HAMPSHIRE SANITARY CODE FOR SUBSURFACE SEWAGE DISPOSAL SYSTEMS AND ANY LOCAL BOARD OF HEALTH OR ZONING SUPPLEMENTARY REGULATIONS.
14. THERE ARE NO VERY POORLY DRAINED SOILS OR SURFACE WATER WITHIN 75' OF THE PROPOSED SYSTEM AND NO POORLY DRAINED SOILS WITH 50' OF THE PROPOSED SYSTEM.
15. THE DESIGNER SHALL BE NOTIFIED IMMEDIATELY OF ANY CONDITIONS CONTRARY TO THOSE DEPICTED ON THE PLAN OR FOR ANY CLARIFICATIONS OF DESIGN INTENT.
16. ALL ELEVATIONS ARE BASED ON A SURVEYED DATUM.
17. SYSTEM IS NOT DESIGNED TO INCORPORATE BACKWASH FROM WATER TREATMENT SYSTEM.
18. INSTALLATION OF THE SYSTEM MUST BE IN STRICT ACCORDANCE WITH THE MANUFACTURERS INSTRUCTIONS PARTICULARLY FOR SAND BENEATH THE LEACH FIELD.
19. THIS PARCEL IS TO BE SERVICED BY PUBLIC WATER AND PRIVATE SEPTIC.
20. THE LOCATION OF ANY UTILITY INFORMATION SHOWN ON THIS PLAN IS APPROXIMATE. F&O MAKES NO CLAIM TOWARD THE ACCURACY OR COMPLETENESS OF UTILITIES SHOWN. THE CONTRACTOR SHALL CONTACT DIGSAFE (1-888-DIG-SAFE) AT LEAST 72 HOURS PRIOR TO THE START OF WORK.
21. SITE WORK SHALL BE CONSTRUCTED FROM A COMPLETE SET OF PLANS, NOT ALL FEATURES ARE DETAILED ON EVERY PLAN. THE ENGINEER IS TO BE NOTIFIED OF ANY CONFLICT WITHIN THIS PLAN SET. ALL PLAN SHEETS WILL BE ON FILE AT THE CITY OF ROCHESTER.
22. SEE OTHER PLAN SHEETS FOR RELATED NOTES AND ASSOCIATED INFORMATION.

DIRECTIONS FROM NHDES:

1. MERGE ONTO I-393 E
2. CONTINUE ONTO US-202 E /US-4 E
3. FOLLOW US-202 E ONTO ROCHESTER ROAD IN NORTHWOOD
4. ROCHESTER ROAD TURNS INTO WASHINGTON STREET/US-202 E
5. TAKE A RIGHT ONTO DRY HILL ROAD IN ROCHESTER
6. TAKE A RIGHT ONTO PICKERING ROAD
7. TAKE A LEFT ONTO TEBBETTS ROAD
8. DESTINATION WILL BE 0.2 MILES ON THE LEFT, PRIOR TO CROSSING US ROUTE 16

VICINITY PLAN SCALE: 1" = 1000' HAMPSTEAD, NH

TEST PIT DATA:

DATE: NOVEMBER 24, 2020

PREDOMINANT SOIL TYPE: 24C AGAWAM FINE SANDY LOAM

UNDERLYING/SURROUNDING SOIL TYPE: WDA WINDSOR LOAMY SAND

SOURCE: SITE SPECIFIC SOILS MAPPING

SOIL DESCRIPTION:

TEST PIT NUMBER 1	APPROX. EXIST. ELEV. = 194.0±
LOAM	0"-8"
10YR 5/8 FINE SANDY LOAM, MASSIVE FRIABLE	8"-27"
10YR 7/6 SANDY, LOOSE, GRANULAR	27"-120"

DEPTH TO ESHWT	N/O
DEPTH TO ROOTS	30"
DEPTH TO LEDGE	N/O
DEPTH TO OBSERVED WATER TABLE	N/O
TOTAL DEPTH	120"

ESHWT SEPARATION ANALYSIS

- EXIST SURFACE ELEVATION AT HIGH BED CORNER = 194.0±
- NO WATER TABLE OBSERVED 120" DOWN = 184.0
- BED BOTTOM PROPOSED AT = 187.0
- 187.0 - 184.0 = 36" SEPARATION = OK

PERCOLATION TEST DATA:

PERCOLATION TEST NUMBER	TP1
PERCOLATION TEST DEPTH	24"
ESTIMATED PERCOLATION RATE (MIN/INCH)	4 MPI

WETLAND NOTE:

WETLANDS WERE DELINEATED ON THE BASIS OF HYDROPHYTIC VEGETATION, HYDRIC SOILS, AND WETLAND HYDROLOGY IN ACCORDANCE WITH THE TECHNIQUES OUTLINED IN THE "CORPS OF ENGINEERS WETLANDS DELINEATION MANUAL, TECHNICAL REPORT Y-87-1", JANUARY 1987. THE HYDRIC SOIL COMPONENT WAS DETERMINED BY USING THE "FIELD INDICATORS FOR IDENTIFYING HYDRIC SOILS IN NEW ENGLAND, VERSION 3"

SYSTEM SAND SPECIFICATIONS:

PERCENTAGE RESTRICTIONS:
- 35% OR LESS OF THE TOTAL SAND MAY BE GRAVEL
- 40-90% OF THE TOTAL SAND IS TO BE COARSE AND VERY COARSE SAND

GRAVEL QUALITY RESTRICTIONS"
- NO GRAVEL IS TO EXCEED 3/4" IN DIAMETER
- NO GRAVEL IS SMALLER THAN 2MM IN DIAMETER (IT MUST NOT PASS THROUGH #10 SIEVE)

COARSE SAND QUALITY RESTRICTIONS"
- NO COARSE SAND IS SMALLER THAN 0.5MM IN DIAMETER (IT MUST NOT PASS THROUGH A #35 SIEVE)

FINES QUALITY RESTRICTIONS:
- NO MORE THAN 2% OF THE TOTAL SAND MAY PASS THOUGH A #200 SIEVE

ASTM STANDARD: C-33 (CONCRETE SAND) MEETS THE ABOVE REQUIREMENTS.

A SIEVE ANALYSIS TO BE PROVIDED TO THE INSTALLER FROM THE SYSTEM SAND SUPPLIER.

MAINTENANCE AND USE NOTE TO HOMEOWNER/USER

- PUMP THE SEPTIC TANK REGULARLY, EVERY 2 YEARS IS RECOMMENDED
- GARBAGE DISPOSALS (IF PRESENT) SHOULD BE USED SPARINGLY. THE GARBAGE DISPOSAL CREATES FINE PARTICLES THAT CAN CLOG THE LEACH FIELD.
- CORRECT ANY PLUMBING LEAKS ASAP (TOILET, SINK, ETC) TO AVOID OVERLOADING THE SEPTIC SYSTEM)
- SPARINGLY USE BLEACH, CLEANING PRODUCTS, AND BEAUTY PRODUCTS SUCH AS CONDITIONER. LARGE DOSES CAN KILL THE HELPFUL BACTERIA LIVING IN THE SEPTIC TANK AND LEACH FIELD
- DO NOT DUMP OILS, GREASE, OR FATS DOWN THE DRAIN. THEY WILL NOT BE PROCESSED BY THE BACTERIA IN THE TANK AND WILL CLOG THE LEACH FIELD.
- IF AN OUTLET FILTER IS INSTALLED, BE SURE TO INSPECT AND CLEAN IT ACCORDING TO THE MANUFACTURER'S RECOMMENDATION.
- IF A LARGE USAGE IS ANTICIPATED (SUCH AS A LARGE PARTY) RENTING A PORTA-POTTY (OR PUMPING THE TANK DRY JUST BEFORE) IS RECOMMENDED TO AVOID PEAK FLOWS INTO THE SEPTIC TANK. A LARGE AMOUNT OF FLOW IN A SHORT TIME COULD CLOG THE LEACH FIELD.
- WATER SOFTENERS SHOULD NOT OUTLET TO THE SEPTIC TANK. THE SALTS WILL KILL THE BACTERIA IN THE TANK.

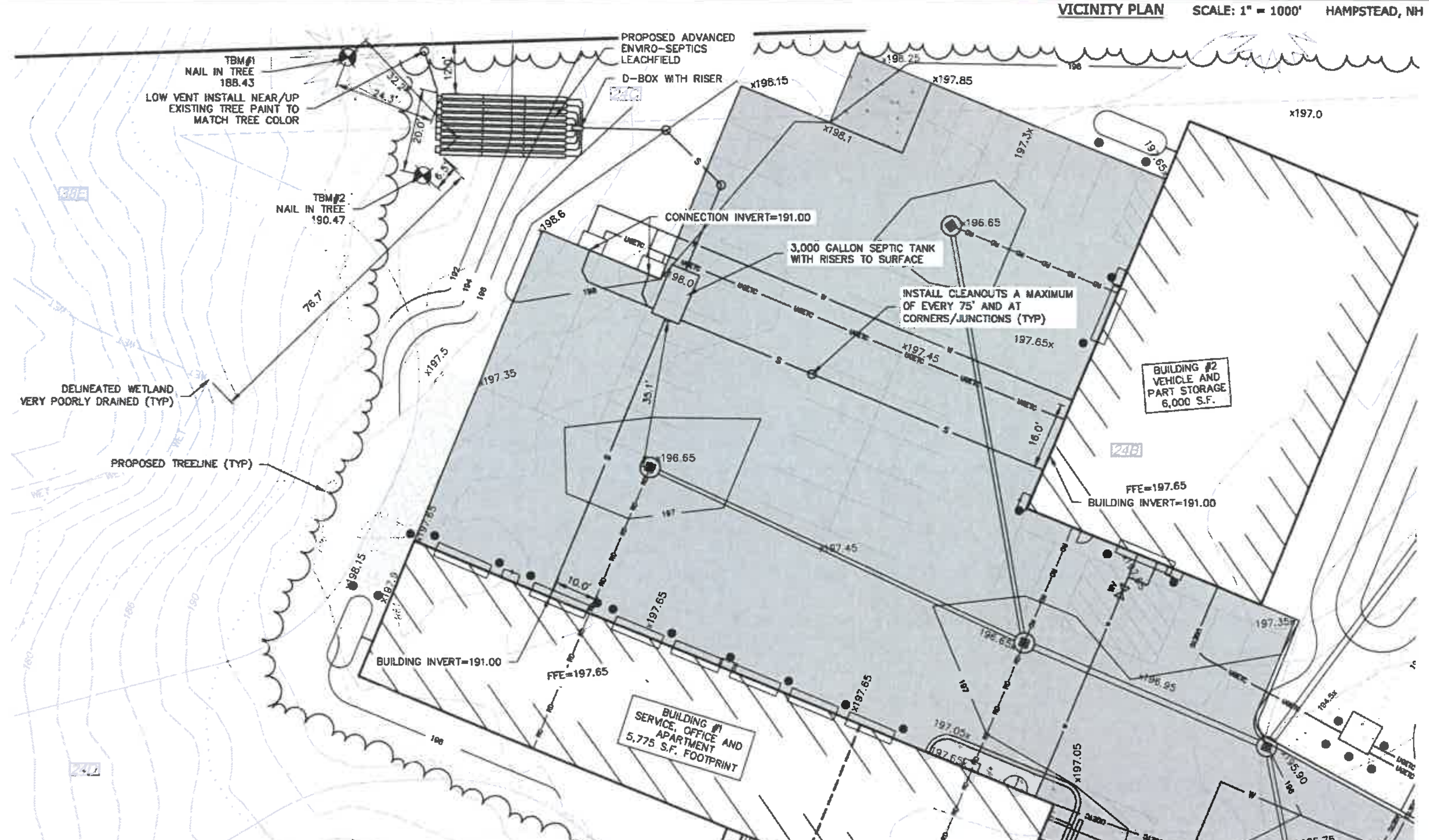

DESIGN INTENT

THE BOTTOM OF THE EFFLUENT DISPOSAL SYSTEM (EDS) SHALL BE CONSTRUCTED AT = 187.0 ELEVATION

THIS IS APPROXIMATELY 84"
☐ ABOVE
☐ AT
☒ BELOW

ORIGINAL GROUND ON HIGH CONTOUR OF THE DESIGNED EFFLUENT DISPOSAL SYSTEM (EDS).

CALCULATIONS

PER TABLE 1008-1 OF ENV-WQ 1000

FACTORIES/WAREHOUSE = 10 EMPLOYEES PER DAY (10GPD PER EMPLOYEE) = 100 GALLONS PER DAY

TRANSIENTS = UP TO 10 TRANSIENTS PER DAY (5GPD/TRANSIENT) = 50 GALLONS PER DAY

RECREATIONAL CAMPGROUND WITH 3-WAY HOOKUP = TWO (2) SITES (60GPD/SITE) = 120 GALLONS PER DAY

TWO (2) BEDROOM SECURITY APARTMENT = 300 GALLONS PER DAY

TOTAL ESTIMATE FLOW = 570 GALLONS PER DAY
DESIGN FOR MINIMUM = 600 GALLONS PER DAY

LEACH FIELD AREA (ADVANCED ENVIRO-SEPTIC) (47LF/100GPD)
(DESIGN FOR MINIMUM 300 GALLONS PER DAY)
- (47LF/100GPD)(600GPD) = 47x6
- 282 LINEAR FEET LINEAR FEET REQUIRED (1.5' SPACING)
- 300 LINEAR FEET PROVIDED (1.5' SPACING)

(FROM TABLE A & B - PRESBY NH STATE ATTACHMENT)

REQUIRED SEPTIC TANK SIZE =
- 1,250 GALLONS REQUIRED
- 3,000 GALLONS PROVIDED

LEGEND

○	IRON PIPE	Ⓦ	WELL
⊛	DRILL HOLE	S.T.	SEPTIC TANK
•	IRON PIN	D.B.	DISTRIBUTION BOX
■	MONUMENT	–PW–	PROPOSED WATER
TP6	SOIL BORING	–FD–	FOUNDATION DRAIN
268 PT	PERC. TEST	EOPD	EDGE OF POORLY DRAINED SOIL

GRAPHIC SCALE

20 0 10 20 40 80

(IN FEET)
1 inch = 20 ft.

PLAN REFERENCE:

1. "EFI EXPRESS; SITE DEVELOPMENT DRAWINGS; TAX MAP 257 LOT 66 TEBBETTS ROAD; ROCHESTER NEW HAMPSHIRE, 03867" CREATED BY THIS OFFICE ON RECORD AT THE CITY OF ROCHESTER PLANNING DEPARTMENT.

RESERVED FOR N.H.D.E.S. USE ONLY:

REVIEWED AND APPROVED
IN ACCORDANCE WITH THE REQUIREMENTS OF THE NH DEPT OF ENVIRONMENTAL SERVICES
WATER DIVISION
Date: 11/15/2021
#eCA2021111512

No.	DATE	DESCRIPTION	DESIGNER	REVIEWER
5.	10/26/2021	REVS PER NHDES	ACD	BAP
4.	09/21/2021	REVS PER NHF&G AND WETLANDS	ACD	BAP
3.	07/20/2021	REVS PER CITY, DES WETLANDS, AND F&G	ACD	BAP
2.	05/05/2021	REVS PER CITY TRG, PB, AOT,& WETLANDS	ACD	BAP
1.	03/15/2021	REVS PER CITY TRG COMMENTS	ACD	BAP

SCALE: HORZ.: 1"=20' VERT.:

DATUM: HORZ.: NAD83 - NH83 VERT.: NAVD88

GRAPHIC SCALE 20 10 0 20

FUSS & O'NEILL
50 COMMERCIAL STREET
MANCHESTER, NEW HAMPSHIRE 03101
603.668.8223
www.fando.com

EFI EXPRESS
SITE PAD
UTILITY SEPTIC PLAN
TAX MAP 257 LOT 66
TEBBETTS ROAD
ROCHESTER NEW HAMPSHIRE

PROJ. No.: 20200646.A10
DATE: JANUARY 2021

CU-103

LAYER STATE:

D:\Civil\Plan\20200646.A10_STP 2021-03.dwg Layout: CU-103 Plotted: Wed, October 27, 2021 - 8:18 AM User: adubois Plotter: DWG TO PDF.PC3 CTB File: FO.STB

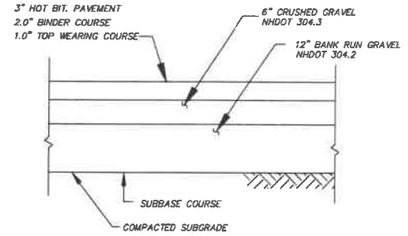

Pavement Section For Parking Lots & Driveways

N.T.S.

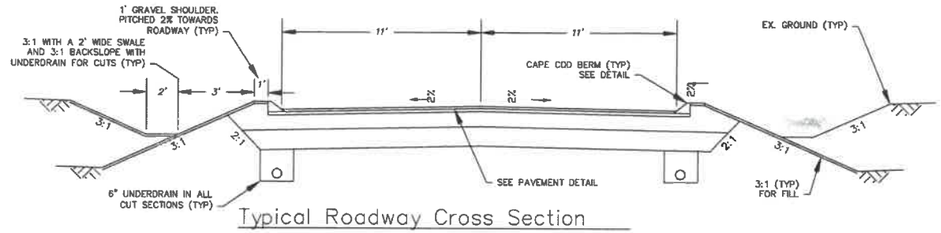

Typical Roadway Cross Section

N.T.S.

ROAD CONSTRUCTION NOTES:

1. REMOVE ALL LOAM, CLAY, MUCK, STUMPS, AND OTHER IMPROPER ROAD FOUNDATION MATERIAL WITHIN 2' OF CRUSHED GRAVEL. COMPACTION TO BE AT LEAST 95% OF STANDARD PROCTOR.
2. ALL BASE MATERIALS AND WORKMANSHIP TO BE IN COMPLIANCE WITH N.H.D.O.T. "STANDARDS FOR ROAD AND BRIDGE CONSTRUCTION" LATEST EDITION AND CITY OF ROCHESTER ROAD CONSTRUCTION STANDARDS.

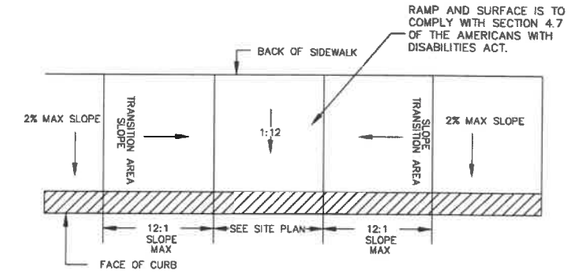

Handicap Sidewalk Ramp

N.T.S.

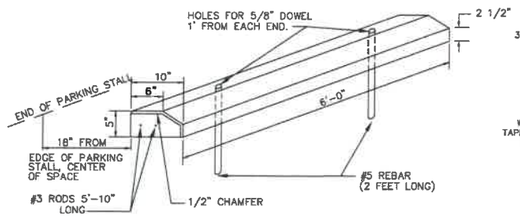

Precast Concrete Wheel Stop

INSTALL PER HANDICAPPED PARKING SPACE DETAIL

N.T.S.

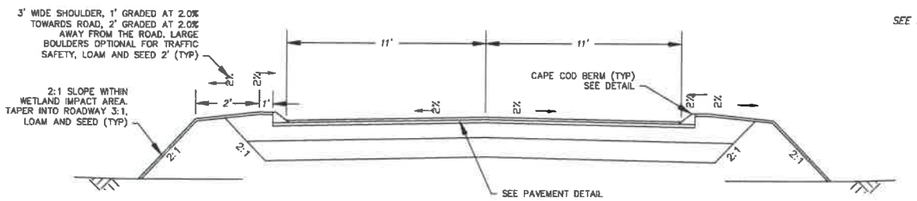

Typical Roadway Cross Section for Wetland Impact Areas

N.T.S.

ROAD CONSTRUCTION NOTES:

1. REMOVE ALL LOAM, CLAY, MUCK, STUMPS, AND OTHER IMPROPER ROAD FOUNDATION MATERIAL WITHIN 2' OF CRUSHED GRAVEL. COMPACTION TO BE AT LEAST 95% OF STANDARD PROCTOR.
2. ALL BASE MATERIALS AND WORKMANSHIP TO BE IN COMPLIANCE WITH N.H.D.O.T. "STANDARDS FOR ROAD AND BRIDGE CONSTRUCTION" LATEST EDITION AND CITY OF ROCHESTER ROAD CONSTRUCTION STANDARDS.

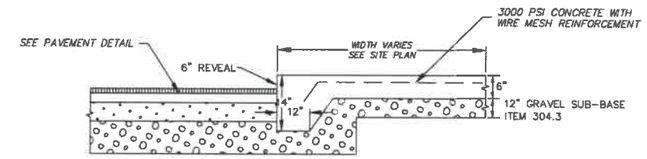

Integral Curb & Sidewalk

N.T.S.

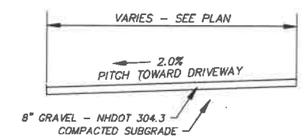

Driveway Flare Gravel Apron Cross Section

N.T.S.

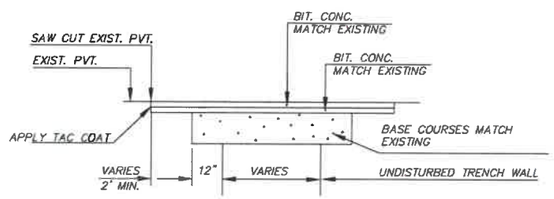

NOTE: FINAL WEARING COURSE SHALL BE DIAMOND SHAPED

5 / 02740 Pavement Patch Without Overlay

N.T.S.

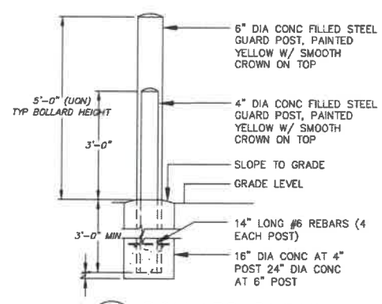

BOLLARD DETAIL

N.T.S.

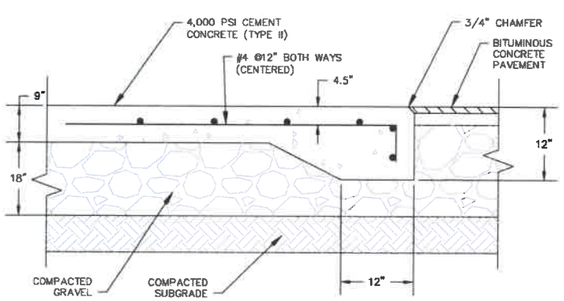

NOTES:

1. SIZE OF DUMPSTER OR DRIVE THROUGH PAD TO BE AS INDICATED ON PLANS. CONSTRUCTION JOINTS TO BE SET AT INTERVALS OF 1/3 OF LENGTH.
2. DETAIL PROVIDED FOR GENERAL INFORMATION ONLY. FINAL DESIGN TO BE BASED ON GEOTECHNICAL ENGINEERS RECOMMENDATIONS.
3) THE NEED FOR PLACEMENT OF A GEOTEXTILE OVER THE EXISTING FILL SUBGRADES SHOULD BE DETERMINED IN THE FIELD BY THE GEOTECHNICAL ENGINEER.

Dumpster/Compactor & Loading Pads

N.T.S.

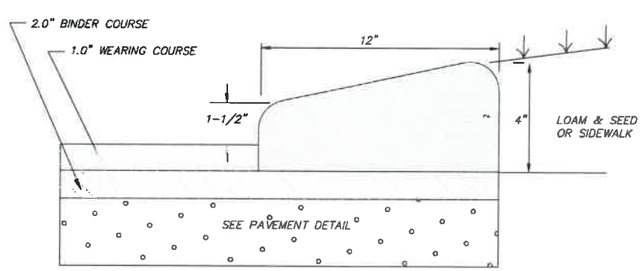

4 / 02770 Bituminous Concrete Curb Detail

N.T.S.

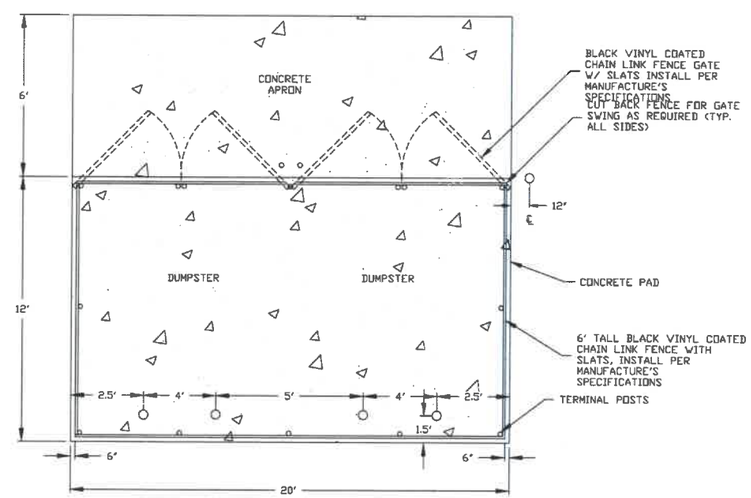

NOTES:

1. DUMPSTER ENCLOSURE SHALL BE 6' TALL.
2. FENCE MATERIAL SHALL BE BLACK COATED CHAIN LINK WITH PRIVACY FLATS.
3. SEE DUMPSTER PAD DETAIL FOR PAD REQUIREMENTS.
4. INSTALL FENCING PER MANUFACTURES REQUIREMENTS.

Dumpster Enclosure Detail

N.T.S.

No.	DATE	DESCRIPTION	DESIGNER	REVIEWER
5.	10/26/2021	REVS PER NHDES	ACD	BAP
4.	09/21/2021	REVS PER NHF&G AND WETLANDS	ACD	BAP
3.	07/20/2021	REVS PER CITY, DES WETLANDS, AND F&G	ACD	BAP
2.	05/05/2021	REVS PER CITY TRG, PB, AOT,& WETLANDS	ACD	BAP
1.	03/15/2021	REVS PER CITY TRG COMMENTS	ACD	BAP

STATE OF NEW HAMPSHIRE — ARMAND ALPHONSE CUBONI III — No. 11921 — 10/26/2021 — LICENSED PROFESSIONAL ENGINEER

SCALE: HORZ.: VERT.: DATUM: HORZ.: VERT.: 0 GRAPHIC SCALE

FUSS & O'NEILL
50 CONGRESSIONAL STREET
MANCHESTER, NEW HAMPSHIRE 03101
603-695-8570
www.fuss&oneill.com

EFI EXPRESS
CIVIL DETAILS
PAVEMENT AND SIDEWALK
TAX MAP 257 LOT 66
TEBBETTS ROAD
ROCHESTER NEW HAMPSHIRE

PROJ. No.: 20200646.A10
DATE: JANUARY 2021

CD-501

File Path: J:\DWG\P2020\0646\A10\Civil\Plan\20200616.A10_DET 2021-03.dwg Layout: CD-501 Plotted: Mon, November 15, 2021 - 1:28 PM User: adubois
MS VIEW: LAYER STATE: Plotter: DWG TO PDF.PC3 CTB File: FO.STB

LENGTH: P-12, 12'-0"; P-14, 14'-0"; P-16, 16'-0".
WEIGHT PER LINEAR FOOT: 2.50 LBS. (MIN.)
HOLES: 3/8" DIA. 1' C-C FULL LENGTH
STEEL: SHALL CONFORM TO ASTM A-499 (GRADE 60) OR ASTM A-576 (GRADE 1070-1080).
FINISH: SHALL BE PAINTED WITH TWO COATS OF AN APPROVED MEDIUM GREEN, BAKED ON OR AIR DRIED, PAINT OF WEATHER RESISTANT QUALITY. ALL FABRICATION SHALL BE COMPLETE BEFORE PAINTING.

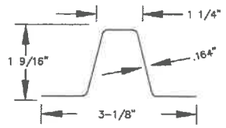

DIMENSIONS SHOWN ARE NOMINAL

ALTERNATE SECTIONS MUST BE APPROVED PRIOR TO USE.

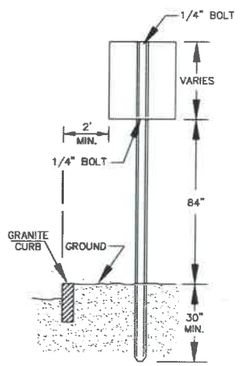

NOTES
1. POSTS SHALL BE PLUMB; ANY POST BENT OR OTHERWISE DAMAGED SHALL BE REMOVED AND PROPERLY REPLACED.
2. POSTS MAY BE SET OF DRIVEN. WHEN POSTS ARE SET, HOLES SHALL BE DUG TO THE PROPER DEPTH; AFTER INSERTING POSTS, THE HOLES SHALL BE BACK FILLED WITH SUITABLE MATERIAL IN LAYERS NOT TO EXCEED A 6" DEPTH, THOROUGHLY COMPACTED.
3. CARE SHALL BE TAKEN TO PRESERVE THE ALIGNMENT OF THE POST. WHEN POSTS ARE DRIVEN, A SUITABLE DRIVING CAP SHALL BE USED AND AFTER DRIVING THE TOP OF THE POST SHALL HAVE SUBSTANTIALLY THE SAME CROSS- SECTIONAL DIMENSION AS THE BODY OF THE POST; BATTERED HEADS WILL NOT BE ACCEPTED.
4. POSTS SHALL NOT BE DRIVEN WITH THE SIGN ATTACHED TO THE POST.
5. SIGNS SHALL BE ERECTED IN CONFORMANCE WITH THE REQUIREMENTS OF THE "MANUAL ON UNIFORM TRAFFIC CONTROL DEVICES".
6. WHEN SIGN IS IN PLACE NO PART OF POST SHALL EXTEND ABOVE THE SIGN.

N.T.S.

Sign Post

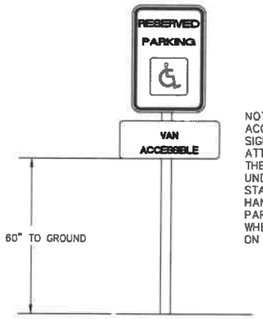

NOTE: VAN ACCESSIBLE SIGN TO BE ATTACHED TO THE SIGN POST UNDER THE STANDARD HANDICAPPED PARKING SIGN WHERE NOTED ON DRAWINGS.

Reserved Parking – Handicap & Van Accessible Sign

N.T.S.

Reserved Parking Handicap Sign

N.T.S.

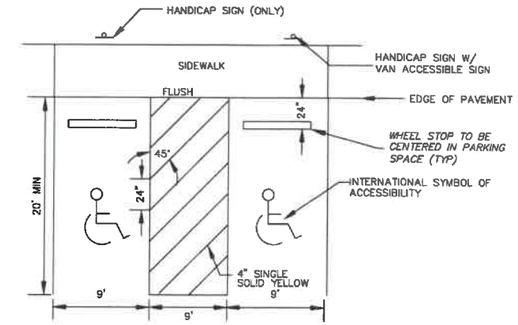

Handicap Parking Space Detail (Van Accessible)

N.T.S.

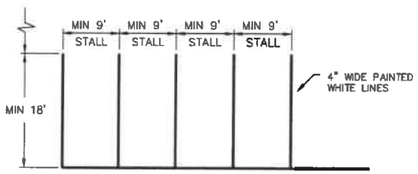

Standard Striping Detail

N.T.S.

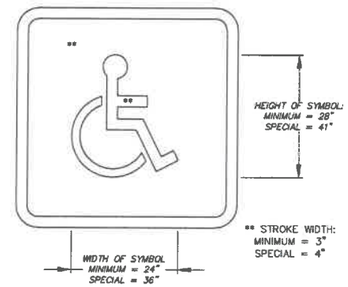

Int'l Symbol of Accessibility Marking

N.T.S.

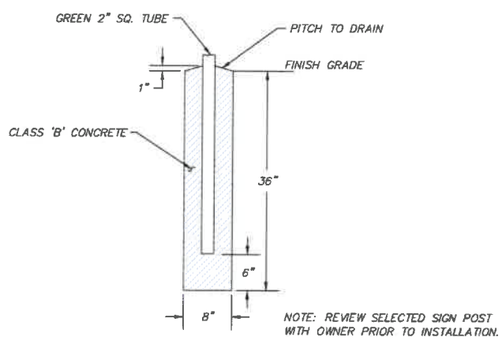

23 / 02890 Traffic Sign Post

N.T.S.

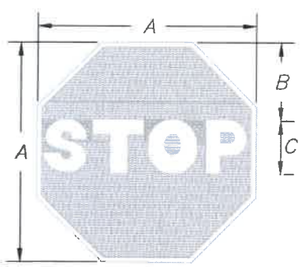

R1-1

SIGN	DIMENSIONS (INCHES)				
	BIKE	MIN	STD	EXPWY	SPECIAL
A	18	24	30	36	48
B	6	8	10	12	16
C	6	8	10	12	16

COLORS
LEGEND - WHITE (REFL)
BACKGROUND - RED (REFL)

21 / 02890 Stop Sign

N.T.S.

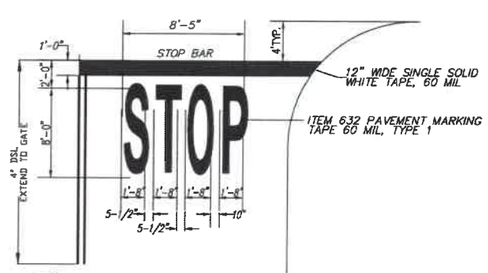

7 / 02760 Typical Stop Bar

N.T.S.

No.	DATE	DESCRIPTION	DESIGNER	REVIEWER
5.	10/26/2021	REVS PER NHDES	ACD	BAP
4.	09/21/2021	REVS PER NHF&G AND WETLANDS	ACD	BAP
3.	07/20/2021	REVS PER CITY, DES WETLANDS, AND F&G	ACD	BAP
2.	05/05/2021	REVS PER CITY TRG, PB, AOT,& WETLANDS	ACD	BAP
1.	03/15/2021	REVS PER CITY TRG COMMENTS	ACD	BAP

STATE OF NEW HAMPSHIRE
ARMANDO ALFONSIE DUBOIS III
No. 11921
10/26/2021
LICENSED PROFESSIONAL ENGINEER

SCALE: HORZ.: VERT.:
DATUM: HORZ.: VERT.:
0 GRAPHIC SCALE

FUSS & O'NEILL
30 COMMERCIAL STREET
MANCHESTER, NEW HAMPSHIRE 03101
603-668-8223
www.fando.com

EFI EXPRESS
CIVIL DETAILS
SIGNAGE AND
PAVEMENT MARKINGS
TAX MAP 257 LOT 66
TEBBETTS ROAD
ROCHESTER NEW HAMPSHIRE

PROJ. No.: 20200646.A10
DATE: JANUARY 2021

CD-502

File Path: J:\DWG\P2020\0646\A10\Civil\Plan\20200619.A10_DET 2021-03.dwg Layout: CD-502 Plotted: Mon, November 15, 2021 - 1:28 PM User: edubois
MS VIEW: LAYER STATE: Plotter: DWG TO PDF.PC3 CTB File: FO.STB

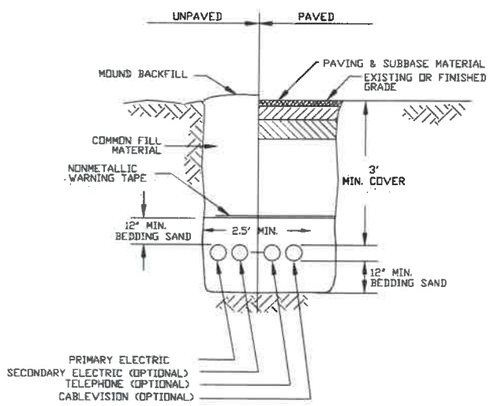

Utility Trench

N.T.S.

UTILITY TRENCH MAY VARY. CONTRACTOR SHALL COORDINATE INSTALLATION WITH EACH UTILITY COMPANY AND INSTALL PER THEIR SPECIFICATIONS AND REQUIREMENTS.

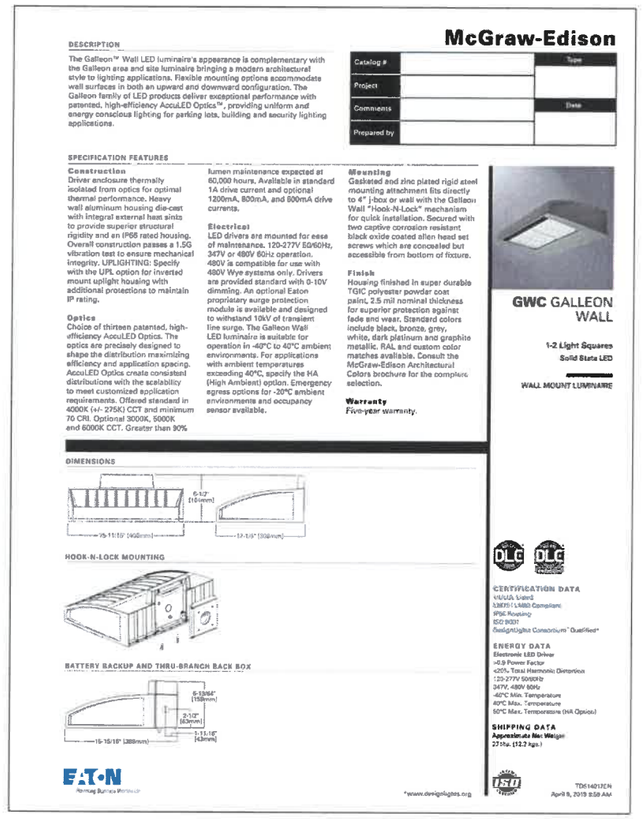

McGraw-Edison

DESCRIPTION

The Galleon™ Wall LED luminaire's appearance is complementary with the Galleon area and site luminaire bringing a modern architectural style to lighting applications. Flexible mounting options accommodate wall surfaces in both an upward and downward configuration. The Galleon family of LED products deliver exceptional performance with patented, high-efficiency AccuLED Optics™, providing uniform and energy conscious lighting for parking lots, building and security lighting applications.

Catalog #		Type	
Project			
Comments		Date	
Prepared by			

SPECIFICATION FEATURES

Construction
Driver enclosure thermally isolated from optics for optimal thermal performance. Heavy wall aluminum housing die-cast with integral external heat sinks to provide superior structural rigidity and an IP66 rated housing. Overall construction passes a 1.5G vibration test to ensure mechanical integrity. UPLIGHTING: Specify with the UPL option for inverted mount uplight housing with additional protections to maintain IP rating.

Optics
Choice of thirteen patented, high-efficiency AccuLED Optics. The optics are precisely designed to shape the distribution maximizing efficiency and application spacing. AccuLED Optics create consistent distributions with the scalability to meet customized application requirements. Offered standard in 4000K (+/- 275K) CCT and minimum 70 CRI. Optional 3000K, 5000K and 6000K CCT. Greater than 90% lumen maintenance expected at 60,000 hours. Available in standard 1A drive current and optional 1200mA, 800mA, and 600mA drive currents.

Electrical
LED drivers are mounted for ease of maintenance. 120-277V 50/60Hz, 347V or 480V 60Hz operation. 480V is compatible for use with 480V Wye systems only. Drivers are provided standard with 0-10V dimming. An optional Eaton proprietary surge protection module is available and designed to withstand 10kV of transient line surge. The Galleon Wall LED luminaire is suitable for operation in -40°C to 40°C ambient environments. For applications with ambient temperatures exceeding 40°C, specify the HA (High Ambient) option. Emergency egress options for -20°C ambient environments and occupancy sensor available.

Mounting
Gasketed and zinc plated rigid steel mounting attachment fits directly to 4" j-box or wall with the Galleon Wall "Hook-N-Lock" mechanism for quick installation. Secured with two captive corrosion resistant black oxide coated allen head set screws which are concealed but accessible from bottom of fixture.

Finish
Housing finished in super durable TGIC polyester powder coat paint, 2.5 mil nominal thickness for superior protection against fade and wear. Standard colors include black, bronze, grey, white, dark platinum and graphite metallic. RAL and custom color matches available. Consult the McGraw-Edison Architectural Colors brochure for the complete selection.

Warranty
Five-year warranty.

GWC GALLEON WALL

1-2 Light Squares
Solid State LED

WALL MOUNT LUMINAIRE

DIMENSIONS

HOOK-N-LOCK MOUNTING

BATTERY BACKUP AND THRU-BRANCH BACK BOX

CERTIFICATION DATA
UL/cUL Listed
LM79 / LM80 Compliant
IP66 Rating
ISO 9001
DesignLights Consortium® Qualified*

ENERGY DATA
Electronic LED Driver
>0.9 Power Factor
<20% Total Harmonic Distortion
120-277V 50/60Hz
347V, 480V 60Hz
-40°C Min. Temperature
40°C Max. Temperature
50°C Max. Temperature (HA Option)

SHIPPING DATA
Approximate Net Weight:
27 lbs. (12.2 kgs.)

EATON
Powering Business Worldwide

*www.designlights.org

TD614021EN
April 8, 2019 8:59 AM

Light Fixture Detail

N.T.S.

Note: Ornamental fixtures may be substituted; coordinate with Owner, Engineer, and Town

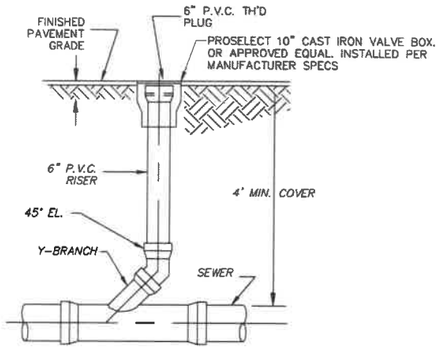

3 / 02530 Sewer Cleanout

N.T.S.

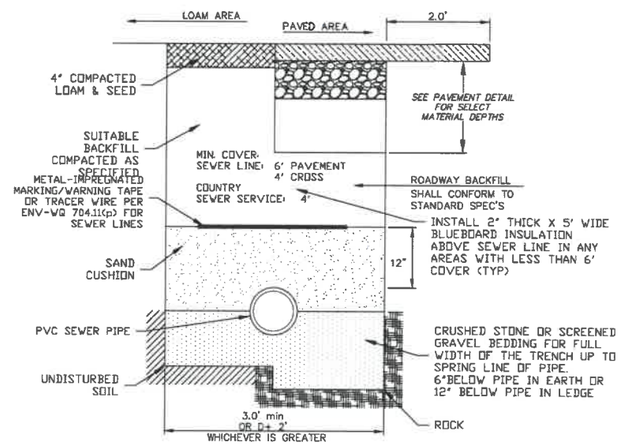

NOTES:

1. PAVEMENT REPAIR IN EXISTING ROADWAYS SHALL CONFORM TO STREET OPENING REGULATIONS. DEPTH FOR BITUMINOUS PAVEMENT SHALL BE AS SPECIFIED IN PAVEMENT DETAIL.
2. NEW ROADWAY CONSTRUCTION SHALL CONFORM TO SUBDIVISION SPECIFICATIONS.
3. IN LIEU OF THE 12" GRAVEL COURSE AND 6" CRUSHED GRAVEL, 18" OF CRUSHED GRAVEL OR RECLAIMED STABILIZED BASE MAY BE USED AS A BASE FOR THE PAVEMENT REPAIR.
4. MATERIAL SHALL BE REPLACED IN KIND WHENEVER POSSIBLE.
5. A MINIMUM 2' CUTBACK IS REQUIRED AT THE TOP OF THE TRENCH WALL OVER UNDISTURBED MATERIAL.
6. COMPACTION SHALL BE IN 12-INCH LAYERS FOR BEDDING AND BLANKET MATERIALS.
7. BACKFILL MATERIAL SHALL BE COMPACTED IN NO MORE THAN 3-FOOT THICK LAYERS TO THE GROUND SURFACE EXCEPT FOR ROAD CONSTRUCTION WHERE THE FINAL 3 FEET SHALL BE COMPACTED IN NOT MORE THAN 12-INCH THICK LAYERS TO THE ROAD SURFACE.
8. TRENCHES FOR SEWER CONSTRUCTION SHALL MEET THE REQUIREMENTS OF ENV-WQ 704.11. PIPE TRENCH BEDDING MATERIAL SHALL BE #67 STONE (ASTM C33/C33M) PER ENV-WQ 704.11(a). SAND BLANKET MATERIAL SHALL CONFORM WITH PROVISIONS OF ENV-WQ 704.11(b). TRENCH BACKFILL MATERIAL SHALL CONFORM WITH ENV-WQ 704.11(h).
9. GRAVITY SEWER CONSTRUCTION MATERIALS SHALL MEET THE REQUIREMENTS OF ENV WQ. 704.05. PVC PIPE SHALL CONFORM WITH ASTM D3034 AND ASTM D2412 AND PVC JOINTS SEALS SHALL CONFORM WITH ASTM D3212.

Typical Sewer Trench Detail

N.T.S.

No.	DATE	DESCRIPTION	DESIGNER	REVIEWER
5.	10/28/2021	REVS PER NHDES	ACD	BAP
4.	08/21/2021	REVS PER NHF&G AND WETLANDS	ACD	BAP
3.	07/20/2021	REVS PER CITY, DES WETLANDS, AND F&G	ACD	BAP
2.	05/05/2021	REVS PER CITY TRG, PB, AOT,& WETLANDS	ACD	BAP
1.	03/15/2021	REVS PER CITY TRG COMMENTS	ACD	BAP

STATE OF NEW HAMPSHIRE
ANDREW ALPHONSE DUBOIS III
No. 11921
10/28/2021
LICENSED
PROFESSIONAL ENGINEER

SCALE: HORZ.: VERT.:
DATUM: HORZ.: VERT.:
0 GRAPHIC SCALE

FUSS&O'NEILL
50 COMMERCIAL STREET
MANCHESTER, NEW HAMPSHIRE 03101
603-668-8223
www.fando.com

EFI EXPRESS
CIVIL DETAILS
ELECTRIC, LIGHTING, AND SEWER
TAX MAP 257 LOT 66
TEBBETTS ROAD
ROCHESTER NEW HAMPSHIRE

PROJ. No.: 20200646.A10
DATE: JANUARY 2021

CD-503

File Path: J:\DWG\P\20200646\A10\Civil\Plan\20200618.A10_DET 2021-03.dwg Layout: CD-503 Plotted: Mon, November 15, 2021 - 1:28 PM User: adubois
MS VIEW#: LAYER STATE: Plotter: DWG TO PDF.PC3 CTB File: FO.STB

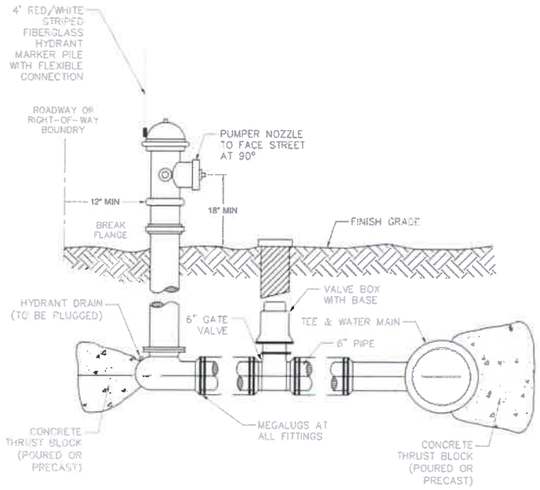

NOTES:

1. FIRE HYDRANT TO BE PAINTED RED FOR LOW PRESSURE ZONES AND RED WITH YELLOW CAPS FOR HIGH PRESSURE ZONES
2. HYDRANTS TO BE EQUIPPED WITH FIBERGLASS LOCATOR
3. HYDRANTS SHALL BE AMERICAN DARLING B84B
4. HYDRANTS SHALL BE OPEN RIGHT
5. ALL FITTINGS SHALL BE D.I. CLASS 350

Typical Hydrant Installation

N.T.S.

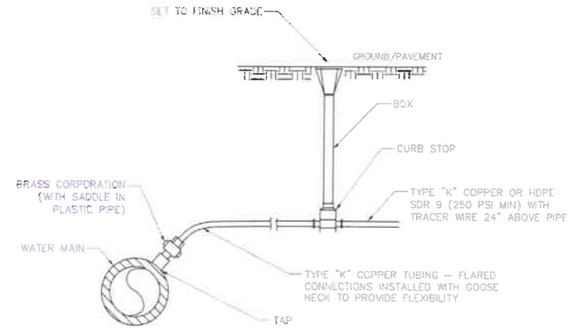

NOTES:

1. WHERE A WATER SERVICE CROSSES A SEWER MAIN, WATER SHALL PASS OVER THE SEWER AND MAINTAIN 18 INCHES OF SEPARATION WITH A MINIMUM COVER OF 4'.
2. WHERE SEPARATION AND MINIMUM COVER CANNOT BE MAINTAINED, CONSULT WITH ROCHESTER DPW FOR DESIGN ALTERATION
3. CURB STOPS NOT TO BE SET IN DRIVEWAYS
4. END OF INSTALLED WATER SERVICE TO BE MARKED WITH 2X4

Typical Water Service Connection

N.T.S.

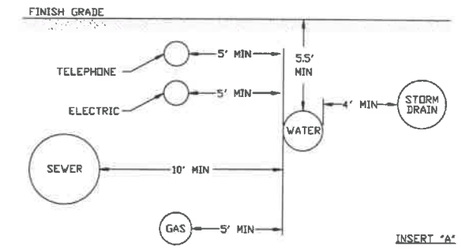

INSERT "A"

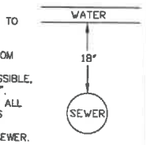

NOTES:

1. ALL MATERIALS AND INSTALLATION PROCEDURES WILL CONFORM TO CITY OF ROCHESTER STANDARDS OF INFRASTRUCTURE DESIGN SPECIFICATIONS.
2. ALL WATER MAINS SHOULD HAVE A MINIMUM DEPTH OF 5.5' FROM TOP OF PIPE TO FINISH GRADE.
3. AT CROSSINGS WHERE 10' HORIZONTAL SEPERATION IS NOT POSSIBLE, 18" VERTICAL SEPERATION SHALL BE PROVIDED. SEE INSERT "A".
4. A MINIMUM 10' HORIZONTAL SEPARATION IS REQUIRED BETWEEN ALL WATER AND SEWER UTILITIES. AT MAIN AND SERVICE CROSSINGS WHERE 10' HORIZONTAL SEPARATION IS NOT POSSIBLE, AN 18" VERTICAL CLEARANCE SHALL BE PROVIDED WITH WATER OVER SEWER.

Water Main--Numerous Details Separation

N.T.S.

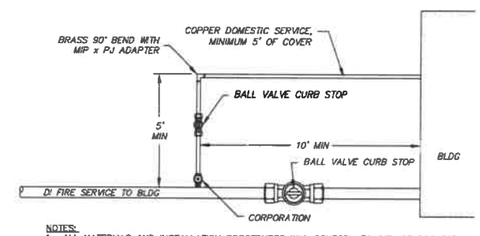

NOTES:

1. ALL MATERIALS AND INSTALLATION PROCEDURES WILL CONFORM TO CITY OF ROCHESTER STANDARDS OF INFRASTRUCTURE DESIGN SPECIFICATIONS.
2. ALL PIPE SHOULD HAVE A MINIMUM DEPTH OF 5.5' FROM TOP OF PIPE TO FINISH GRADE.

Typical Domestic Water Service Tapped Off Fire Service

N.T.S.

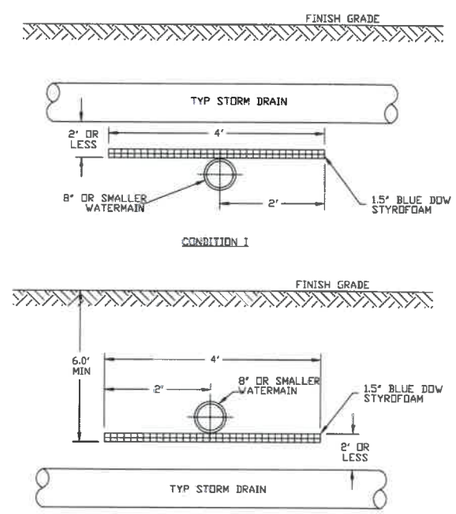

NOTES:

1. HAWC RESERVES THE RIGHT TO MODIFY INSULATION REQUIREMENTS AS NECESSARY BASED ON FIELD CONDITIONS, ETC.
2. THE LENGTH OR WIDTH OF INSULATION SHALL EXTEND 1 STORM DRAIN PIPE DIAMETER BEYOND THE EDGE OF STORM DRAIN PIPE IN EACH DIRECTION OR A MINIMUM OF 2' BEYOND THE CENTERLINE OF THE STORM DRAIN PIPE, WHICHEVER IS GREATER.
3. ALL BUTT JOINT SEAMS TO BE OVERLAPPED WITH A 1' PIECE OF INSULATION CENTERED OVER SEAM.

Storm Drain – Watermain Intersecting Runs

N.T.S.

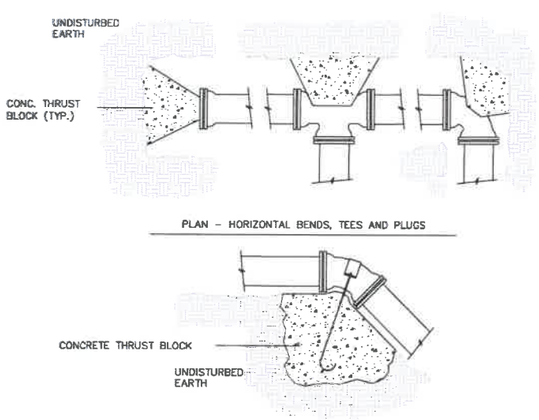

NOTES

1. THRUST BLOCK DIMENSIONS TO BE DETERMINED IN FIELD BY ENGINEER BASED ON PIPE SIZE, WATER PRESSURE AND SOIL TYPE.
2. STONE BACKING MAY BE SUBSTITUTED FOR CONCRETE THRUST BLOCKS PROVIDED THE STONE(S) ARE OF EQUAL SIZE AND BEAR ON UNDISTURBED EARTH.
3. USE OF JOINT RESTRAINT SYSTEMS SHALL NOT ELIMINATE THRUST BLOCK REQUIREMENTS (WHERE POSSIBLE).

Typical Thrust Blocks

N.T.S.

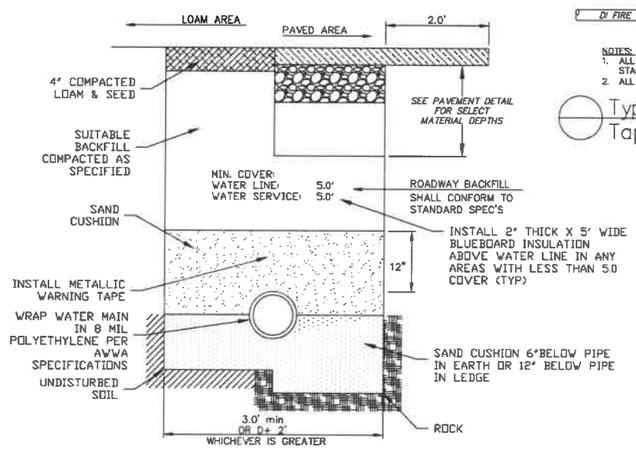

NOTES:

1. PAVEMENT REPAIR IN EXISTING ROADWAYS SHALL CONFORM TO STREET OPENING REGULATIONS. DEPTH FOR BITUMINOUS PAVEMENT SHALL BE AS SPECIFIED IN PAVEMENT DETAIL.
2. NEW ROADWAY CONSTRUCTION SHALL CONFORM TO TOWN SPECIFICATIONS.
3. MATERIAL SHALL BE REPLACED IN KIND WHENEVER POSSIBLE.
4. A MINIMUM 2' CUTBACK IS REQUIRED AT THE TOP OF THE TRENCH WALL OVER UNDISTURBED MATERIAL.
5. COMPACTION SHALL BE IN 12-INCH LAYERS FOR BEDDING AND BLANKET MATERIALS.
6. BACKFILL MATERIAL SHALL BE COMPACTED IN NO MORE THAN 3-FOOT THICK LAYERS TO THE GROUND SURFACE EXCEPT FOR ROAD CONSTRUCTION WHERE THE FINAL 3 FEET SHALL BE COMPACTED IN NOT MORE THAN 12-INCH THICK LAYERS TO THE ROAD SURFACE.

Typical Water Trench Detail

N.T.S.

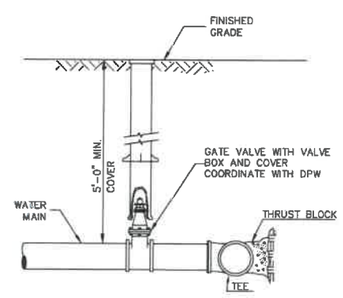

Buried Gate Valve Detail

N.T.S.

No.	DATE	DESCRIPTION	DESIGNER	REVIEWER
5.	10/26/2021	REVS PER NHDES	ACD	BAP
4.	09/21/2021	REVS PER NHF&G AND WETLANDS	ACD	BAP
3.	07/20/2021	REVS PER CITY, DES WETLANDS, AND F&G	ACD	BAP
2.	05/05/2021	REVS PER CITY TRG, PB, ACI,& WETLANDS	ACD	BAP
1.	03/15/2021	REVS PER CITY TRG COMMENTS	ACD	BAP

STATE OF NEW HAMPSHIRE
ADAMS MCPHONSE DUBOIS III
No. 11921
10/26/2021
LICENSED
PROFESSIONAL ENGINEER

SCALE:
HORZ.:
VERT.:
DATUM:
HORZ.:
VERT.:
0
GRAPHIC SCALE

FUSS & O'NEILL
50 COMMERCIAL STREET
MANCHESTER, NEW HAMPSHIRE 03101
(603) 695-8522
www.fandocom

EFI EXPRESS
CIVIL DETAILS
WATER AND SEWER
TAX MAP 257 LOT 66
TEBBETTS ROAD
ROCHESTER NEW HAMPSHIRE

PROJ. No.: 20200646.A10
DATE: JANUARY 2021

CD-504

File Path: J:\DWG\P2020\0646\A10\Civil\Plan\20200616.A10_DET 2021-03.dwg Layout: CD-504 Plotted: Mon, November 15, 2021 - 1:28 PM User: edubois
Plotter: DWG TO PDF.PC3 CTB File: FO.STB
MS VIEW:
LAYER STATE:

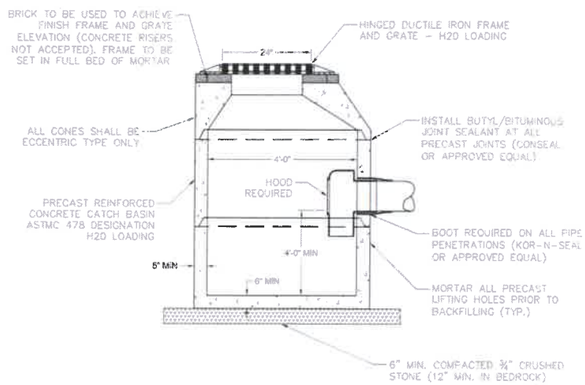

NOTES:
1. ALL SECTIONS SHALL BE CONCRETE, CLASS AA (4,000 PSI) CIRCUMFERENTIAL REINFORCEMENT SHALL BE 0.12 SQ. IN. PER L.F. IN ALL SECTIONS AND SHALL BE PLACED IN THE CENTER THIRD OF THE WALL.
2. THE TONGUE AND GROOVE OF THE JOINT SHALL CONTAIN ONE LINE OF CIRCUMFERENTIAL REINFORCEMENT EQUAL TO 0.12 SQ. IN. PER L.F.
3. RISERS OF 1'-4" MAY BE USED TO REACH THE DESIRED ELEVATION.
4. STEPS ARE NOT ALLOWED.

PRECAST REINFORCED CATCH BASIN
N.T.S.

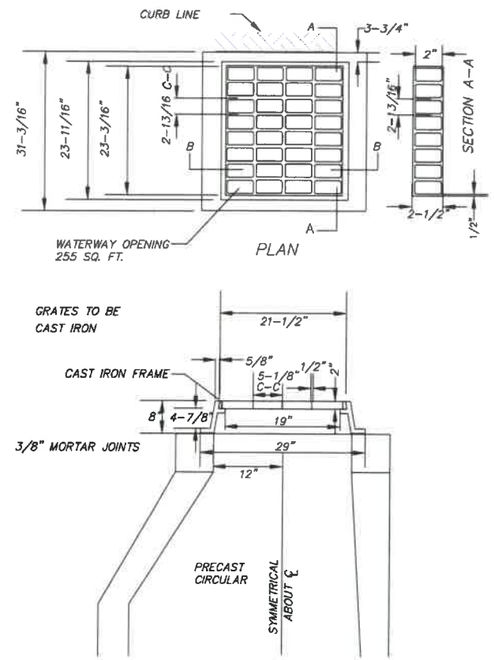

31 / 02630 Typical Grate & Frame Detail
N.T.S.

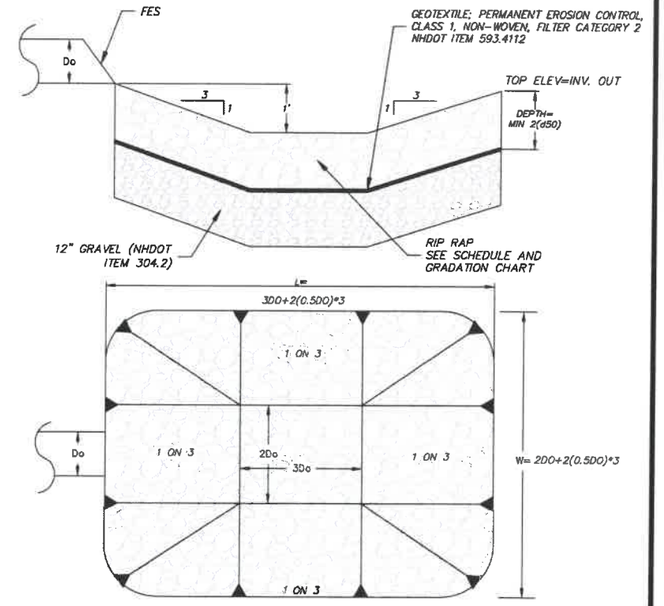

USE MIN. d50 OF 4 IN.

RIP RAP GRADATION (PER NRCS)	
% OF WEIGHT SMALLER THAN THE GIVEN SIZE	SIZE OF STONE
100	6.0 TO 8.0 d50
85	5.0 TO 7.0 d50
50	4.0 TO 6.0 d50
15	1.0 TO 2.0 d50

Culvert Location	FES18 (From CB14)	FES16 (From CB11)	FES25 (From CB26)
Do(ft)	1.00	1.00	1.50
Q(cfs)	1.3	1.1	4.7
Bottom of Scour Hole Width	2	2	3
Bottom of Scour Hole Length	3	3	5
Depth of Scour Hole	0.5	0.5	0.75
Top of Scour Hole Width	6	6	9
Top of Scour Hole Length	5	5	8
d50 (in.) min	4.0	4.0	4.0

NOTES:
1. CALCULATIONS ILLUSTRATE THAT BASIN FOREBAYS ARE LARGER THAN REQUIRED PLUNGE POOLS.
2. CALCULATIONS FOR THE ABUTTING LOT ARE ILLUSTRATED WITHIN THE TABLE, REFER TO OTHER PLAN SET FOR FES NOT ILLUSTRATED UPON THIS PLAN SET.

RipRap Plunge Pool Detail
N.T.S.

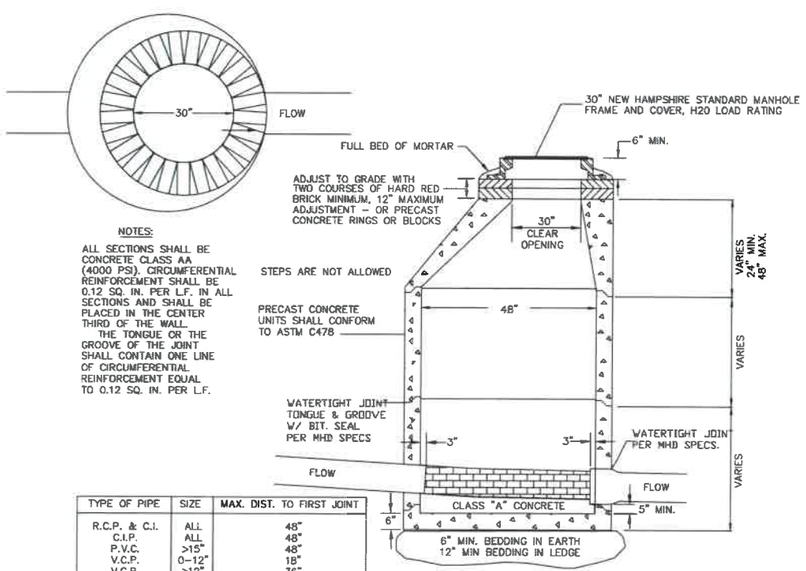

NOTES:
ALL SECTIONS SHALL BE CONCRETE CLASS AA (4000 PSI). CIRCUMFERENTIAL REINFORCEMENT SHALL BE 0.12 SQ. IN. PER L.F. IN ALL SECTIONS AND SHALL BE PLACED IN THE CENTER THIRD OF THE WALL.
THE TONGUE OR THE GROOVE OF THE JOINT SHALL CONTAIN ONE LINE OF CIRCUMFERENTIAL REINFORCEMENT EQUAL TO 0.12 SQ. IN. PER L.F.

STEPS ARE NOT ALLOWED

PRECAST CONCRETE UNITS SHALL CONFORM TO ASTM C478

TYPE OF PIPE	SIZE	MAX. DIST. TO FIRST JOINT
R.C.P. & C.I.	ALL	48"
C.I.P.	ALL	48"
P.V.C.	>15"	48"
V.C.P.	0-12"	18"
V.C.P.	>12"	36"

CONSTRUCTION NOTES:
1. INSTALL FIRST SECTION BELOW EXISTING PIPE.
2. CONSTRUCT BRICK SHELF AND ADD REMAINING SECTIONS
3. FORM WATER TIGHT JOINT USING "KENT-SEAL" BITUMASTIC SEAL
4. CUT PIPE IN TWO LOCATIONS, 3" FROM MANHOLE INSIDE WALL

Drain Manhole Detail
N.T.S.

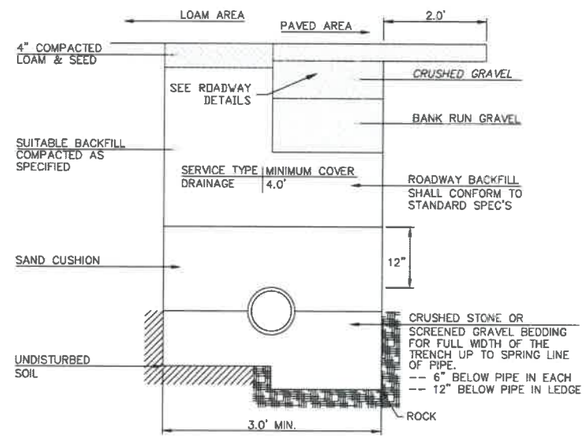

NOTES:
1. PAVEMENT REPAIR IN EXISTING ROADWAYS SHALL CONFORM TO STREET OPENING REGULATIONS. DEPTH FOR BITUMINOUS PAVEMENT SHALL BE AS SPECIFIED IN PAVEMENT DETAIL.
2. NEW ROADWAY CONSTRUCTION SHALL CONFORM TO SUBDIVISION SPECIFICATIONS.
3. IN LIEU OF THE 12" GRAVEL COURSE AND 6" CRUSHED GRAVEL, 18" OF CRUSHED GRAVEL OR RECLAIMED STABILIZED BASE MAY BE USED AS A BASE FOR THE PAVEMENT REPAIR.
4. MATERIAL SHALL BE REPLACED IN KIND WHENEVER POSSIBLE.
5. A MINIMUM 2' CUTBACK IS REQUIRED AT THE TOP OF THE TRENCH WALL OVER UNDISTURBED MATERIAL.
6. USE CLASS V CONCRETE IN LOCATIONS WITH LESS THAN 3' OF COVER.
7. IF LEDGE IS DISCOVERED, REMOVE A MINIMUM OF 2' BELOW GRAVELS AND REPLACE WITH SAND.

6 / 02315 Typical Drainage Trench Detail
N.T.S.

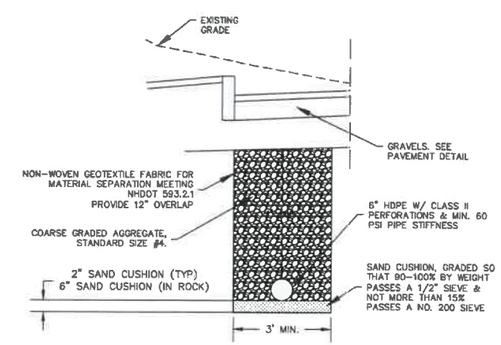

Roadway Underdrain Detail
N.T.S.

No.	DATE	DESCRIPTION	DESIGNER	REVIEWER
5.	10/28/2021	REVS PER NHDES	ACD	BAP
4.	09/21/2021	REVS PER NHF&G AND WETLANDS	ACD	BAP
3.	07/20/2021	REVS PER CITY, DES WETLANDS, AND F&G	ACD	BAP
2.	05/05/2021	REVS PER CITY TRG, PB, AOT,& WETLANDS	ACD	BAP
1.	03/15/2021	REVS PER CITY TRG COMMENTS	ACD	BAP

STATE OF NEW HAMPSHIRE
ANANDO ALPHONSE DUBOIS III
No. 11921
10/28/2021
LICENSED
PROFESSIONAL ENGINEER

SCALE:
HORZ.:
VERT.:
DATUM:
HORZ.:
VERT.:
0
GRAPHIC SCALE

HUSS & O'NEILL
50 COMMERCIAL STREET
MANCHESTER, NEW HAMPSHIRE 03101
(603) 668-1971
www.huss.com

EFI EXPRESS
CIVIL DETAILS
STORMWATER
TAX MAP 257 LOT 66
TEBBETTS ROAD
ROCHESTER NEW HAMPSHIRE

PROJ. No.: 20200646.A10
DATE: JANUARY 2021

CD-505

File Path: J:\DWGS\P2020\0646A10\Civil\Plan\20200916.A10_DET 2021-03.dwg Layout: CD-505 Plotted: Mon, November 15, 2021 - 1:27 PM User: adubois
Plotter: DWG TO PDF.PC3 CTB File: FO.STB
MS VIEW:
LAYER STATE:

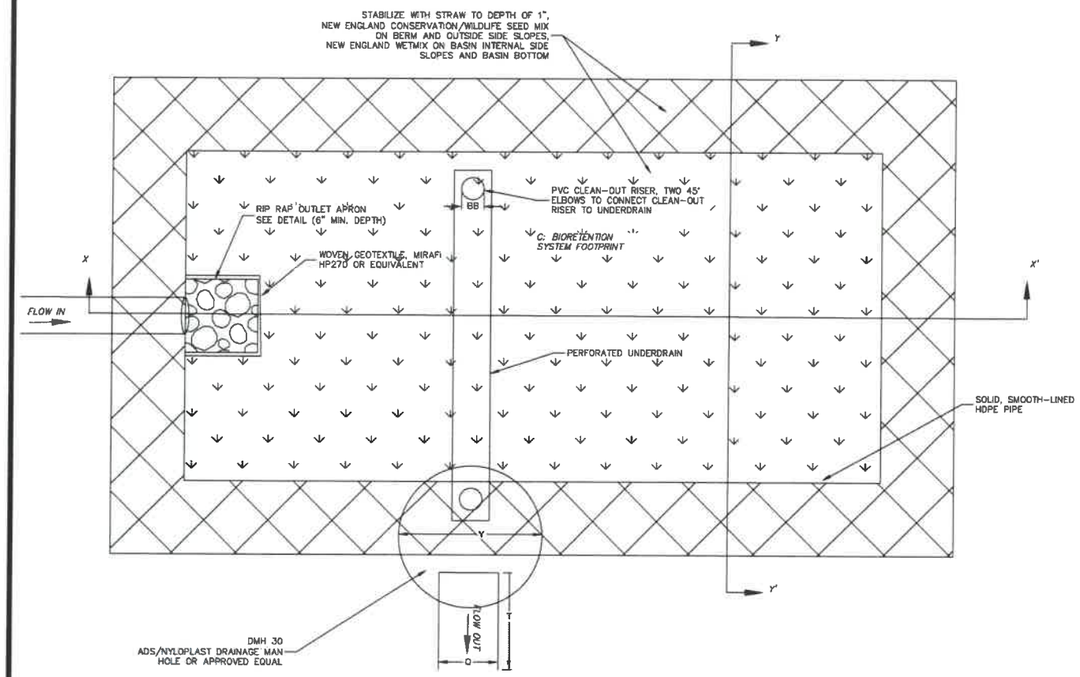

HYBRID BIORETENTION POND NOTES:

1. *FOR FULL BIORETENTION STORMWATER SYSTEM SPECIFICATIONS, PLEASE REFER TO THE UNH STORMWATER CENTER'S BIORETENTION SPECIFICATIONS PUBLICATION, DATED FEBRUARY 2017 FOUND AT https://unh.edu/unhsc/specs-and-fact-sheets-0*
2. *THESE DETAILS ARE NOT TO SCALE. FOR DIMENSION AND SPECIFICATIONS, REFERENCE EACH LETTER TO THE TABLE OF METRICS.*
3. *BIORETENTION SOIL MIX SHALL NOT BE PLACED UNTIL AFTER ENGINEERING APPROVAL AND INSPECTION OF SUBGRADE.*
4. *PLANT THE SYSTEM AS SPECIFIED. AT A MINIMUM, PLANT THE SYSTEM FLOOR AND SIDE SLOPES WITH RYE GRASS MIXTURE CONTAINING PERENNIAL AND WINTER RYES, AT A RATE SPECIFIED BY THE MANUFACTURER. STABILIZE THE SLOPES WITH STRAW TO A DEPTH OF 1". SEE LANDSCAPE PLAN FOR SPECIFIC SEED MIX ON BIORETENTION SOIL.*
5. *GENERAL CONSTRUCTION GUIDELINES:*
   - *5.1. VERIFY THAT NO FOREIGN OR DELETERIOUS MATERIAL OR LIQUID SUCH AS PAINT, PAINT WASHOUT, CONCRETE SLURRY, ASPHALT/CONCRETE LAYERS OR CHUNKS, CEMENT, PLASTER, OILS, GASOLINE, DIESEL FUEL, PAINT THINNER, TURPENTINE, TAR, ROOFING COMPOUND, SOLID WASTE, OR ACID HAS BEEN DEPOSITED IN PLANTING SOIL (BIORETENION MEDIA OR LOAM ON SIDE SLOPES).*
   - *5.2. PROCEED WITH PLACEMENT OF ANY SUBSURFACE MATERIALS ONLY AFTER UNSATISFACTORY CONDITIONS HAVE BEEN CORRECTED.*
   - *5.3. COMPACT EACH BLENDED LIFT OF BIORETENTION SOIL MEDIA TO 75% OF MAXIMUM STANDARD PROCTOR DENSITY ACCORDING TO ASTM D698.*
   - *5.4. GRADE SOIL MEDIA TO A SMOOTH, UNIFORM SURFACE PLANE WITH LOOSE, UNIFORMLY FINE TEXTURE, ROLL AND RAKE, REMOVE RIDGES, AND FILL DEPRESSIONS TO MEET FINISHED GRADES.*
   - *5.5. LIGHTLY COMPACT FINISHED FLOOR ELEVATION AND FINISHED SLOPES USING THE BUCKET OF AN EXCAVATOR, NON-MOTORIZED ROLLER, HAND TAMP, OR OTHER MEANS, THEN ROUGHEN SURFACE WITH A RAKE TO LOOSEN SOILS BEFORE SEEDING.*
   - *5.6. DO NOT COMPACT THE SUBGRADE AT THE BOTTOM OF EXCAVATION UNLESS PERMEABILITY EXCEEDS 1X10-5 CM/S.*
6. *BIORETENTION SOIL MEDIA (BSM) MIXTURE SPECIFICATIONS:*
   - *6.1. STICKS AND ROOTS SHOULD BE MINIMIZED IN THE BXM MIXTURE AND PREFERABLY LIMITED TO NOTHING LARGER THAN 4.76 MM (0.187 IN).*
   - *6.2. DEBRIS AND OTHER FOREIGN MATERIAL SHOULD BE MINIMIZED.*
   - *6.3. ORGANIC MATTER SHOULD MAKE UP A MINIMUM OF 3% BY VOLUME AND A MAXIMUM 8% BY VOLUME OF THE BSM.*
   - *6.4. BSM MIXTURE SHOULD HAVE A SOIL REACTION PH OF 6 TO 7/*
   - *6.5. CATION EXCHANGE CAPACITY (cec) OF BSM SHOULD BE A MINIMUM OF 10 MEQ PER 100 ML AT A PH OF 7.0.*
7. *IF BSM IS PURCHASED FROM A MANUFACTURER, BSM MIXTURE SHALL NOT CONTAIN THE FOLLOWING;*
   - *7.1. UNACCEPTABLE MATERIALS: CONCRETE SLURRY, CONCRETE LAYER OR CHUNKS, CEMENT, PLASTER, BUILDING DEBRIS, ASPHALT, BRICKS, OILS, GASOLINE, DIESEL FUEL, PAINT THINNER, TURPENTINE, TAR, ROOFING COMPOUND, ACID, SOILD WASTE, OR OTHER EXTRANEOUS MATERIALS THAT ARE HARMFUL TO PLANTS.*
   - *7.2. UNSUITABLE MATERIALS: STONES, ROOTS, PLANTS, SOD, CLAY LUMPS, OR POCKETS OF COURSE SAND THAT EXCEED A COMBINED MAXIMUM OF 5% BY DRY WEIGHT OF THE MANUFACTURED SOIL.*
   - *7.3. LARGE MATERIALS: STONES, CLODS, ROOTS, CLAY LUMPS EXCEEDING 0.187 IN (4.76 MM) IN ANY DIMENSION.*
8. *ORGANIC SOIL AMENDMENTS:*
   - *8.1. NO COMPOST SHOULD BE USED IN THE PLANTING MIX (USED ON THE SIDE SLOPES AND SURROUNDING AREA) UNLESS SPECIFIED BY THE ENGINEER.*
   - *8.2. SPHAGNUM PEAT: PARTIALLY DECOMPOSED SPHAGNUM PEAT MOSS, FINELY DIVIDED OR OF GRANULAR TEXTURE WITH 100% PASSING THROUGH A 1/2-IN (13 MM) SIEVE, WITH A PH OF 3.4 TO 4.8.*
   - *8.3. WOOD DERIVATIVES: SHREDDED WOOD, WOOD CHIPS, GROUND BARK, OR WOOD WASTE; OF UNIFORM TEXTURE AND FREE OF STONES, STICKS, SOIL OR TOXIC MATERIAL.*
9. *THE CRUSHED STONE LAYER SHOULD CONSIST OF AASHTO #3 STONE (3/4-IN).*

BIORETENTION SYSTEM DESIGN METRICS

ID	DESIGN PARAMETER	MIN	SMA 300 DESIGN	UNITS
A	SYSTEM FLOOR WIDTH		22	FT
B	SYSTEM FLOOR LENGTH		36	FT
C	BIORETENTION FOOTPRINT AREA		800	SF
D	WATER QUALITY VOLUME		935	CF
E	WQV ELEVATION		191.55	FT
F	SYSTEM FLOOR ELEVATION		190.80	FT
G	BOTTOM BSM ELEVATION		189.30	FT
H	BOTTOM STONE ELEVATION		187.80	FT
I	TOP STONE/OUTLET INVERT ELEVATION		189.05	FT
J	WQV PONDING DEPTH		0.75	FT
K	BSM MEDIA DEPTH	18	18	IN
Li	INLET END PEA GRAVEL DEPTH		8	IN
Lo	OUTLET END PEA GRAVEL DEPTH	3	3	IN
Mi	INLET END CRUSHED STONE DEPTH		9	IN
Mo	OUTLET END CRUSHED STONE DEPTH	14	14	
N	SUBDRAIN DEPTH ABOVE BOTTOM	4	4	IN
O	PERFORATED SUBDRAIN DIAMETER	6	6	IN
P	OUTLET STRUCTURE DIAMETER (I.D.)	6	48	IN
Q	OUTLET PIPE DIAMETER	6	12	IN
R	INFLOW PIPE DIAMETER		12	IN
S	PERFORATED UNDERDRAIN LENGTH		20	FT
T	OUTLET PIPE LENGTH		SEE TABLE	FT
U	INFLOW PIPE LENGTH		SEE TABLE	FT
V	SIDE SLOPE GRADE (RUN PER 1FT RISE)		3	FT/FT
W	ROCK APRON WIDTH		N/A	IN
X	ROCK APRON LENGTH		N/A	FT
Y	RISER DOME GRATE DIAMETER		48	IN
Z	PVC LINER SLOPE		1	%
AA	OUTLET PIPE SLOPE		0.5	%
BB	CLEAN-OUT RISER DIAMETER		6	IN
CC	CLEAN-OUT RISER ELEVATION		191.80	FT
DD	PVC LINER GAP	0.1*B	3.6	FT
EE	UNDERDRAIN PIPE ORIFICE DIAMETER	1.0	1.0	IN
FF	TOP OF POND BERM ELEVATION		193.50	FT

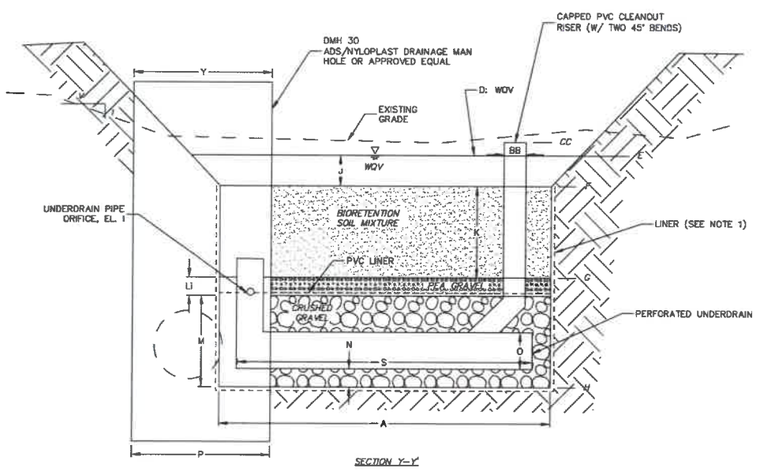

SECTION Y-Y'

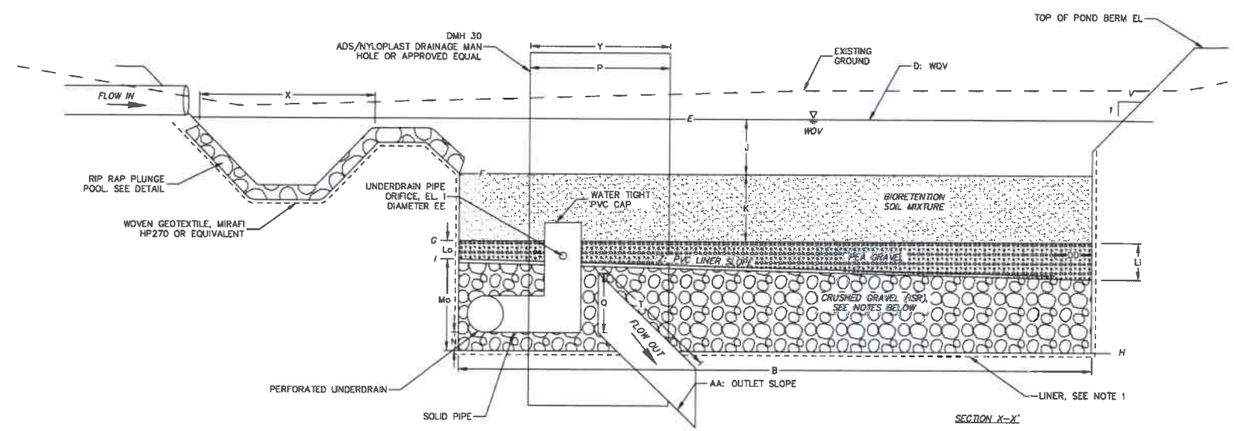

SECTION X-X'

ACCEPTABLE PARTICLE SIZE DISTRIBUTION OF FINAL BIORETENTION SOIL MIX

MEDIA TYPE	SIEVE #	SIZE (IN)	SIZE (MM)	% PASSING
COURSE SAND	4	0.19	4.76	100
MEDIUM SAND	10	0.08	2.00	95
FINE SAND	40	0.02	0.42	40-15
SILTS	200	0.00	0.75	10-20
CLAYS	<200	PAN	PAN	0-5

*BIORETENTION SOIL MEDIA COMPONENTS:**

- *60-85% SAND (0.5 TO 2.0 MM) (SEE SPECS ABOVE)*
- *15-25% LOAM OR TOPSOIL*
- *3-8% ORGANIC MATTER*
- *0-5% WATER TREATMENT RESIDUALS OR IRON FILINGS ***

** ALTERNATIVELY, USE MEDIA SPECIFIED IN THE ALTERATION OF TERRAIN RULES, ENV-WQ 1508.07(k)*
*** THIS IS AN AMENDMENT USED FOR ENHANCED PHOSPHORUS ADSORPTION.*

INTERNAL STORAGE RESERVOIR (ISR) NOTES:

1. *THE HYBRID BIORETENTION SYSTEM HARBORS AN ANAEROBIC INTERNAL STORAGE RESERVOIR FOR NITROGEN REMOVAL.*
2. *THE ISR IS SEPARATED BY AN IMPERMEABLE PVC LINER BETWEEN THE PEA GRAVEL AND CRUSHED STONE LAYERS.*
3. *THE PVC LINER SLOPES FROM THE OUTLET TOWARDS THE INLET TO MAXIMIZE STORAGE RETENTION AND PROVIDE EXTRA TREATMENT/FILTER TIME VIA PLUG FLOW THROUGH CRUSHED STONE.*
4. *WATER VOLUME IN THE ISR SHALL BE 26% OF THE WQV.*
5. *PVC LINER THICKNESS OF 40 TO 60 MIL, PREFERABLY SEAMLESS. IF SEAMS ARE UNAVOIDABLE, THE SEAMS SHALL BE SEALED.*

LINER NOTES:

1. *ACCEPTABLE LINER OPTIONS INCLUDE:*
   - *a. SOIL COMPACTION: 6-12 IN CLAY SOIL (MINIMUM 15% PASSING THE #200 SIEVE AND A MAXIMUM PERMEABILITY OF 1X10-5 CM/S)*
   - *b. A 40 MIL PVC LINER WITH SAND BEDDING AND/OR NON-WOVEN GEOTEXTILE. PVC LINERSEAMS MAY BE WELDED, TAPED (WATERPROOF TAPE), OR OVERLAPPED (MIN. ONE FOOT).*
   - *c. A 4" THICK LAYER OF BENTONITE.*

Hybrid Bioretention Pond with Internal Storage Reservoir

N.T.S.

No.	DATE	DESCRIPTION	DESIGNER	REVIEWER
5.	10/26/2021	REVS PER NHDES	ACD	BAP
4.	06/21/2021	REVS PER NHF&G AND WETLANDS	ACD	BAP
3.	07/20/2021	REVS PER CITY, DES WETLANDS, AND F&G	ACD	BAP
2.	05/05/2021	REVS PER CITY TRG, PB, AOT,& WETLANDS	ACD	BAP
1.	03/15/2021	REVS PER CITY TRG COMMENTS	ACD	BAP

STATE OF NEW HAMPSHIRE — ALBERT M. DEPHONSE — DUBOIS III — No. 11921 — 10/26/2021 — LICENSED PROFESSIONAL ENGINEER

SCALE: HORZ.: N/A VERT.:
DATUM: HORZ.: VERT.:
0 GRAPHIC SCALE

FUSS & O'NEILL
50 COMMERCIAL STREET
MANCHESTER, NEW HAMPSHIRE 03101
(603) 695-8123
www.fuss-o'neill.com

EFI EXPRESS
CIVIL DETAILS
STORMWATER
TAX MAP 257 LOT 66
TEBBETTS ROAD
ROCHESTER NEW HAMPSHIRE

PROJ. No.: 20200646.A10
DATE: JANUARY 2021

CD-506

File Path: J:\DWG\P2020\0646\A10\Civil\Plan\20200616.A10_DET 2021-03.dwg Layout: CD-506 Plotted: Mon, November 15, 2021 - 1:27 PM User: adubois
Plotter: DWG TO PDF.PC3 CTB File: FO.STB
MS VIEW:
LAYER STATE:

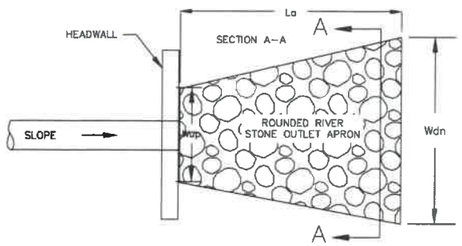

THE HEIGHT OF THE STRUCTURAL LINING ALONG THE CHANNEL SIDE'S SHALL BEGIN AT THE ELEVATION EQUAL TO THE TOP OF THE CONDUIT AND TAPER DOWN TO THE CHANNEL BOTTOM THROUGH THE LENGTH OF THE APRON.

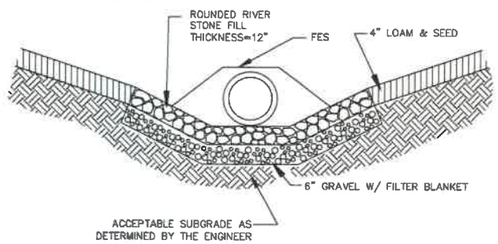

OUTLET	Do (ft.)	Q (cfs)	Tw (ft.)	La (ft.)	Wup (ft.)	Wdn (ft.)	d50 (in.)
FES 33	2.50	3.75	0.20	19.21	7.5	26.71	2.8 *

*Use 4" Minimum d50

PROVIDE CLASS I RIP RAP (MIN)

Rounded River Stone Apron Outlet Protection

N.T.S.

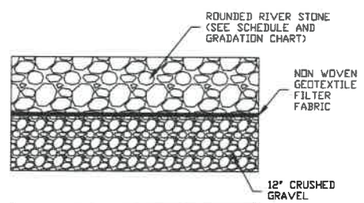

RIP RAP GRADATION	
% OF WEIGHT SMALLER THAN THE GIVEN SIZE	SIZE OF STONE
100	1.5 TO 2.0 d50
85	1.3 TO 1.8 d50
50	1.0 TO 1.5 d50
15	1.3 TO 0.5 d50

Rounded River Stone Detail

N.T.S.

PIPE SIZE	A	B (MAX)	H	L	W
12 in	6.50 IN	10.0 in	6.50 in	25.00 in	29.00 in
18 in	7.50 IN	15.0 in	6.50 in	32.00 in	35.00 in
24 in	7.50 IN	18.0 in	6.50 in	36.00 in	45.00 in
30 in (CMP)	7.50 IN	22.0 in	8.60 in	58.00 in	63.00 in

NOTE:
PE THREADED ROD W/WING NUTS PROVIDED FOR END SECTIONS 12"–24". 30" & 36" END SECTIONS REQUIRE TWO (2) THREADED RODS FOR ASSEMBLE.

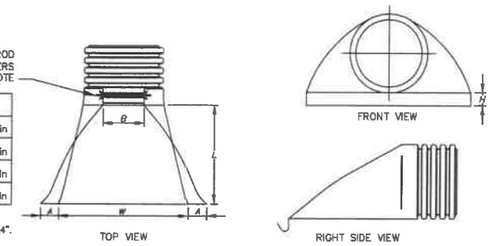

HDPE Flared End Section

N.T.S.

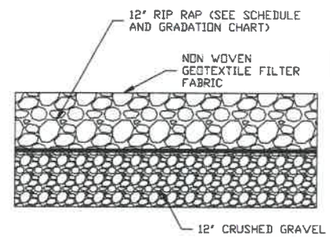

USE MIN. d50 OF 8 IN.

RIP RAP GRADATION (PER NRCS)	
% OF WEIGHT SMALLER THAN THE GIVEN SIZE	SIZE OF STONE
100	12.0 TO 16.0 d50
85	10.4 TO 14.4 d50
50	8.0 TO 12.0 d50
15	6.4 TO 10.4 d50

Rip Rap Weir Detail

N.T.S.

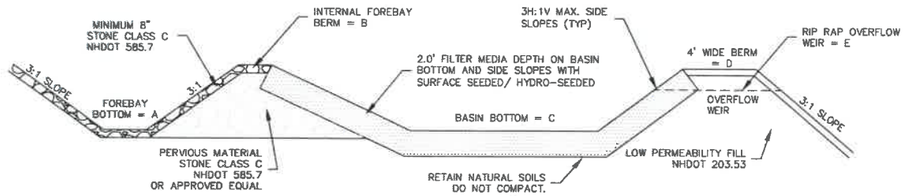

STORMWATER MANAGEMENT AREAS					
STORMWATER MANAGEMENT AREA	A	B	C	D	E
SMA 100	189.50	191.50	191.50	194.25	193.00
SMA 200	188.00	190.00	190.00	193.20	194.50

BASIN PREPARATION AND NOTES :
1. PROVIDE GRASS SEED/HYDRO-SEED THAT CAN BE INUNDATED FOR 72+ HOURS.
   1.1. NEW ENGLAND WETMIX IN BASIN BOTTOM
   1.2. NEW ENGLAND CONSERVATION WILDLIFE MIX FOR SIDE SLOPES
2. REMOVE EXISTING SOILS TO A DEPTH OF 24" BELOW BOTTOM OF BASIN.
3. THE BASIN FLOOR SHALL BE DEEPLY TILLED WITH A ROTARY TILLER OR DISC HARROW, FOLLOWED BY A PASS WITH A LEVELING DRAG. PRIOR TO FILTER MEDIA LAYER BEING CONSTRUCTED.
4. DO NOT TRAFFIC EXPOSED SOIL SURFACE WITH CONSTRUCTION EQUIPMENT. IF FEASIBLE, PERFORM EXCAVATIONS WITH EQUIPMENT POSITIONED OUTSIDE THE LIMITS OF THE INFILTRATION SYSTEM.
5. INFILTRATION BASIN BOTTOM MATERIAL– MINIMUM DEPTH OF 24" FILTER MEDIA MIX.
6. DO NOT PLACE INFILTRATION SYSTEMS INTO SERVICE UNTIL CONTRIBUTING AREAS HAVE BEEN FULLY STABILIZED.

INFILTRATION BASIN DETAIL

N.T.S.

Table 4-4. Bioretention Filter Media			
Component Material	Percent of Mixture by Volume	Gradation of Material	
		Sieve No.	Percent by Weight Passing Standard Sieve
Filter Media Option A			
ASTM C-33 concrete sand	50 to 55		
Loamy sand topsoil, with fines as indicated	20 to 30	200	15 to 25
Moderately fine shredded bark or wood fiber mulch, with fines as indicated	20 to 30	200	< 5
Filter Media Option B			
Moderately fine shredded bark or wood fiber mulch, with fines as indicated	20 to 30	200	< 5
Loamy coarse sand	70 to 80	10	85 to 100
		20	70 to 100
		60	15 to 40
		200	8 to 15

Filter Media Mix

NOTES:
1. FILTER MEDIA TO BE MIXED/COMBINED PRIOR TO INSTALLATION.
2. DO NOT APPLY IN LAYERS/LIFTS.

STORMWATER MAINTENANCE NOTES:

INFILTRATION BASIN

1. EMBANKMENT – THE EMBANKMENT SHOULD BE INSPECTED ANNUALLY TO DETERMINE IF RODENT BURROWS, WET AREAS, OR EROSION OF THE FILL IS TAKING PLACE.
2. VEGETATION – THE VEGETATED AREAS OF THE STRUCTURE SHOULD BE PROTECTED FROM DAMAGE BY FIRE, GRAZING, TRAFFIC, AND DENSE WEED GROWTH. LIME AND FERTILIZER SHOULD BE APPLIED AS NECESSARY AS DETERMINED BY SOIL TESTS. TREES AND SHRUBS SHOULD BE KEPT OFF THE EMBANKMENT AND EMERGENCY SPILLWAY AREAS.
3. INLETS – PIPE INLETS AND SPILLWAY STRUCTURES SHOULD BE INSPECTED ANNUALLY AND AFTER EVERY MAJOR STORM. ACCUMULATED DEBRIS AND SEDIMENT SHOULD BE REMOVED. IF PIPES ARE COATED, THE COATING SHOULD BE CHECKED AND REPAIRED AS NECESSARY.
4. OUTLETS – PIPE OUTLETS SHOULD BE INSPECTED ANNUALLY AND AFTER EVERY MAJOR STORM. THE CONDITION OF THE PIPES SHOULD BE NOTED AND REPAIRS MADE AS NECESSARY. IF EROSION IS TAKING PLACE THEN MEASURES SHOULD BE TAKEN TO STABILIZE AND PROTECT THE AFFECTED AREA OF THE OUTLET.
5. SEDIMENT – SEDIMENT SHOULD BE CONTINUALLY CHECKED IN THE BASIN. WHEN SEDIMENT ACCUMULATIONS REACH THE PREDETERMINED DESIGN ELEVATION, THEN THE SEDIMENT SHOULD BE REMOVED AND PROPERLY DISPOSED OF.
6. SAFETY INSPECTIONS – ALL PERMANENT IMPOUNDMENTS SHOULD BE INSPECTED BY A QUALIFIED PROFESSIONAL.
7. REFER TO THE INSPECTION AND MAINTENANCE MANUAL, LOCATED WITHIN THE ALTERATION OF TERRAIN STORMWATER MANAGEMENT REPORT.

TEST PIT DATA:

Test Pit 1 — Approx Exist Elev 194 ±
0"-8" Loam
8-27" 10yr5/8 Fine Sandy Loam - Massive Friable
27-120" 10YR 7/6 Sandy Loose, Granular
LEDGE: NONE OBSERVED
ESHWT: NONE OBSERVED
ROOTS: 30"
OWT: NONE OBSERVED
24C Agawam Fine Sandy Loam HSC B
Ksat= 6.0/20 in/hr

Test Pit 2 — Approx Exist Elev 196.5 ±
0"-8" Loam
8-25" 10yr5/8 Fine Sandy Loam - Massive Friable
25-132" 10YR 7/6 Sandy Loose, Granular
LEDGE: NONE OBSERVED
ESHWT: NONE OBSERVED
ROOTS: 30"
OWT: NONE OBSERVED
24B Agawam Fine Sandy Loam HSC B
Ksat= 6.0/20 in/hr

Test Pit 2A — Approx Exist Elev 196.5 ±
0"-8" Loam
8-25" 10yr5/8 Fine Sandy Loam - Massive Friable
25-132" 10YR 7/6 Sandy Loose, Granular
LEDGE: NONE OBSERVED
ESHWT: NONE OBSERVED
ROOTS: 30"
OWT: NONE OBSERVED
24B Agawam Fine Sandy Loam HSC B
Ksat= 6.0/20 in/hr

Test Pit 3 — Approx Exist Elev 197 ±
0"-8" Loam
8-25" 10yr5/8 Fine Sandy Loam - Massive Friable
25-132" 10YR 7/6 Sandy Loose, Granular
LEDGE: NONE OBSERVED
ESHWT: NONE OBSERVED
ROOTS: 30"
OWT: NONE OBSERVED
24B Agawam Fine Sandy Loam HSC B
Ksat= 6.0/20 in/hr

Test Pit 3A — Approx Exist Elev 197.5 ±
0"-8" Loam
8-25" 10yr5/8 Fine Sandy Loam - Massive Friable
25-132" 10YR 7/6 Sandy Loose, Granular
LEDGE: NONE OBSERVED
ESHWT: NONE OBSERVED
ROOTS: 30"
OWT: NONE OBSERVED
24B Agawam Fine Sandy Loam HSC B
Ksat= 6.0/20 in/hr

Test Pit 4 — Approx Exist Elev 192 ±
0"-6" Loam
6-32" 10yr5/8 Fine Sandy Loam - Granular Loose
32-58" 10YR 7/6 Very Silty/Clayey, firm, blocky
LEDGE: NONE OBSERVED
ESHWT: 32"
ROOTS: 25"
OWT: 32"
350B Udipsamments, wet substratum HSC C
Ksat= 0.6/2.0 in/hr

Test Pit 5 — Approx Exist Elev 195 ±
0"-12" Loam
12-26" 10yr5/8 Fine Sandy Loam - Massive Friable
26-100" 10YR 7/6 Sandy Loose, Granular
LEDGE: NONE OBSERVED
ESHWT: NONE OBSERVED
ROOTS: 30"
OWT: NONE OBSERVED
24B Agawam Fine Sandy Loam HSC B
Ksat= 6.0/20 in/hr

Due to proximity of soil boundary, also listing
300B Udipsamments HSC A
Ksat= 6.0/20 in/hr

NOTES:
1. PERFORMED BY BRIAN PRATT OF THIS OFFICE ON NOVEMBER 24, 2020.
2. CALCULATION OF THE DESIGN INFILTRATION RATE REPRESENT KSAT VALUES FROM ENV-WQ 1504.14(C)(1). SSSNNE SPECIAL PUBLICATION NO. 5, KSAT VALUES FOR NEW HAMPSHIRE SOILS, SEPTEMBER 2009. REFER TO INFILTRATION FEASIBILITY REPORT WITHIN THE DRAINAGE ANALYSIS FOR ADDITIONAL INFORMATION.

No.	DATE	DESCRIPTION	DESIGNER	REVIEWER
5.	10/26/2021	REVS PER NHDES	ACD	BAP
4.	09/21/2021	REVS PER NHF&G AND WETLANDS	ACD	BAP
3.	07/20/2021	REVS PER CITY, DES WETLANDS, AND F&G	ACD	BAP
2.	05/05/2021	REVS PER CITY TRC, PB, AOT,& WETLANDS	ACD	BAP
1.	03/15/2021	REVS PER CITY TRC COMMENTS	ACD	BAP

STATE OF NEW HAMPSHIRE — BRIAN ALPHONSE DUBOIS III — No. 11921 — 10/26/2021 — LICENSED PROFESSIONAL ENGINEER

SCALE: HORZ.: N/A VERT.:
DATUM: HORZ.: VERT.:
0 GRAPHIC SCALE

FUSS & O'NEILL
50 COMMERCIAL STREET
MANCHESTER, NEW HAMPSHIRE 03101
603-695-8200
www.fuss&oneill.com

EFI EXPRESS
CIVIL DETAILS
STORMWATER & TESTPIT DATA
TAX MAP 257 LOT 66
TEBBETTS ROAD
ROCHESTER NEW HAMPSHIRE

PROJ. No.: 20200646.A10
DATE: JANUARY 2021

CD-507

File Path: J:\DWG\P2020\0646\A10\Civil\Plan\20200916 A10_DET 2021-03.dwg Layout: CD-507 Plotted: Mon, November 15, 2021 - 1:27 PM User: edubois
MS VIEW: LAYER STATE: Plotter: DWG TO PDF.PC3 CTB File: FO.STB

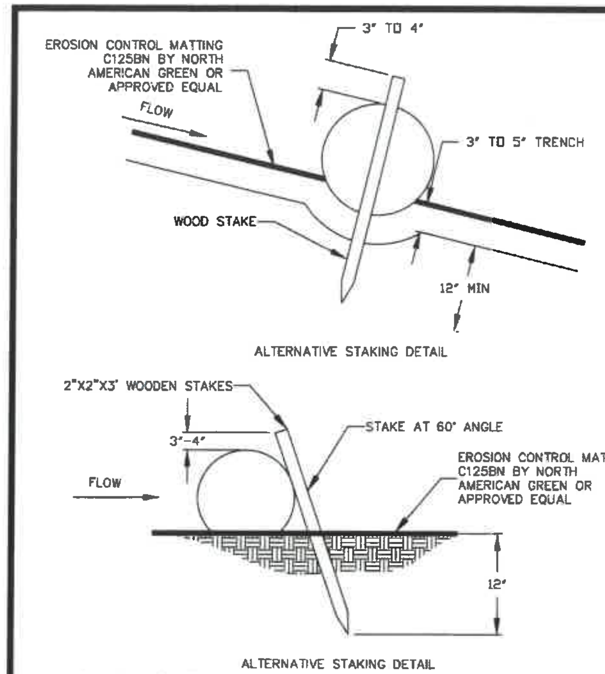

COMPOST FILTER SOCK GENERAL NOTES:

1. FOR DITCH APPLICATIONS, MINIMUM INSTALLED HEIGHT OF SINGLE SOCK NOMINALLY. SOCKS ARE PLACED PERPENDICULAR TO FLOW OF WATER. FILTER SOCKS SHALL CONTINUE UP SIDE SLOPES TO TOP OF BANK OR MAXIMUM 3-FEET ABOVE INSTALLED HEIGHT. FILTER SOCKS SHALL REMAIN IN PLACE UNTIL ALL UPSTREAM AREAS ARE PERMANENTLY STABILIZED.
2. REMOVE SEDIMENT FROM BEHIND THE FILTER SOCK ONCE IT ACCUMULATES TO ONE-HALF OF THE ORIGINAL HEIGHT OF THE FILTER SOCK.
3. INSPECT FILTER SOCKS AFTER EACH RUNOFF EVENT. REMOVE AND REPLACE IF SIGNS OF UNDERCUTTING OR DOWNSTREAM RILLS ARE OBSERVED.
4. SOCKS SHOULD BE REMOVED FROM SLOPES AFTER STABILIZATION IS COMPLETE UNLESS DIRECTED OTHERWISE.
5. FILTER SOCKS APPLIED IN DITCHES SHALL BE COMPLETELY REMOVED ONCE VEGETATION IS ESTABLISHED.

Compost Filter Sock Installation Detail

N.T.S.

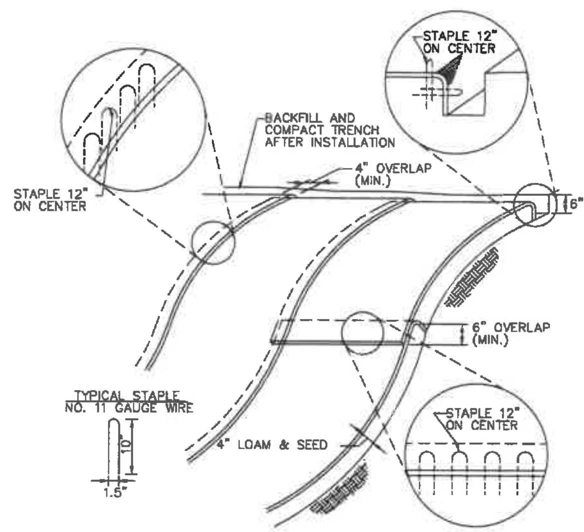

NOTES:

1. BEGIN AT THE TOP OF BLANKET INSTALLATION AREA BY ANCHORING BLANKET IN A 6" DEEP TRENCH. BACKFILL AND COMPACT TRENCH AFTER STAPLING.
2. ROLL THE BLANKET DOWN THE SWALE IN THE DIRECTION OF THE WATER FLOW.
3. THE EDGES OF BLANKETS MUST BE STAPLED WITH APPROX. 4 INCH OVERLAP WHERE 2 OR MORE STRIP WIDTHS ARE REQUIRED.
4. WHEN BLANKETS MUST BE SPLICED DOWN THE SWALE, PLACE BLANKET END OVER END WITH 6 INCH (MIN.) OVERLAP AND ANCHOR DOWN SLOPE BLANKET IN A 6 INCH DEEP TRENCH.
5. BLANKETS SHALL NOT CONTAIN WELDED PLASTIC, PLASTIC, OR MULTI-FILAMENT OR MONOFILAMENT POLYPROPYLENE NETTING OR MESH. BLANKETS CONTAINING PLASTIC MULTI-FILAMENT OR MONOFILAMENT POLYPROPYLENE NETTING OR MESH. SHALL NOT BE USED DUE TO POTENTIAL ENDANGERED SPECIES.
6. BLANKETS SHALL BE COCONUT STRAW JUTE MATTING.

Erosion Control Blanket Slope Protection

N.T.S.

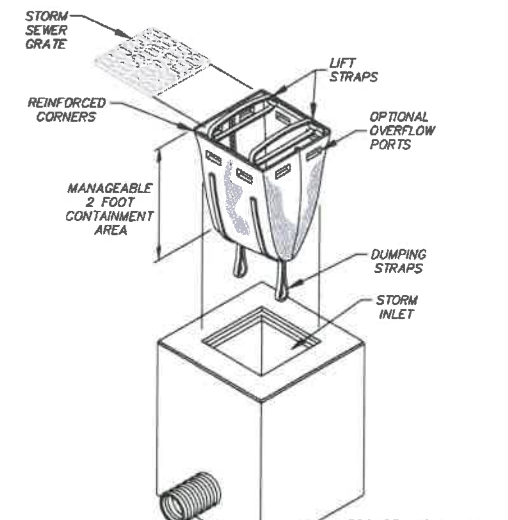

PROVIDE AND INSTALL DANDY SACK ® BY DANDY PRODUCT AND INSTALL PER MANUFACTURES RECOMMENDATIONS.

Dandy Sack

N.T.S.

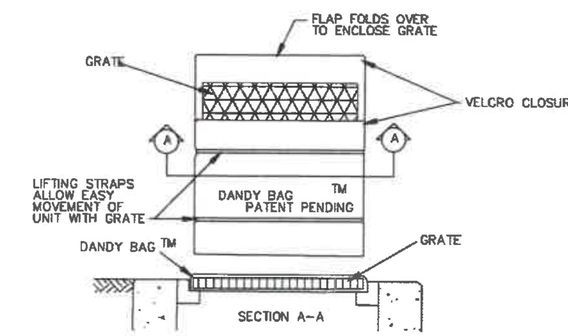

INSTALLATION:
STAND GRATE ON END. PLACE DANDY BAG OVER GRATE.
ROLL GRATE OVER SO THAT OPEN END IS UP.
PULL UP SACK.
TUCK FLAP IN PREE VELCRO STRIPS TOGETHER. BE SURE END OF GRATE IS COMPLETELY COVERED BY FLAP OR DANDY BAG WILL NOT WORK PROPERLY. HOLDING HANDLES, CAREFULLY PLACE DANDY BAG WITH GRATE INSERTED INTO CATCH BASIN FRAME.
MAINTENANCE:
WITH A STIFF BRISTLE BROOM OR SQUARE POINT SHOVEL REMOVE SILT & OTHER DEBRIS OFF SURFACE AFTER EACH EVENT. REMOVE FINE MATERIAL FROM INSIDE ENVELOPE AS NEEDED.
(CONTACT DANDY PRODUCTS INC. 1-800-591-2284)

Dandy Bag

N.T.S.

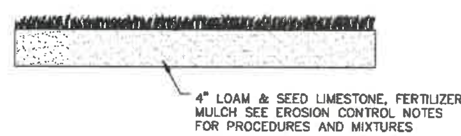

Loam & Seed Detail

N.T.S.

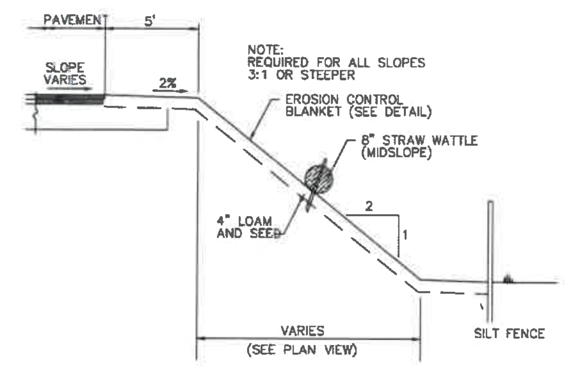

Slope Stabilization

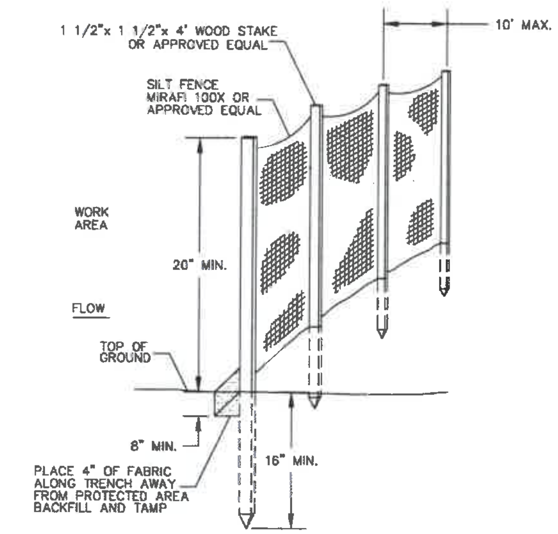

Silt Fence Barrier

N.T.S.

The following channel guide outlines general recommendations for installing RollMax System temporary and/or permanent RECPs concentrated flow applications. Consult the staple pattern guide (Figure 1) for fastener spacing recommendations based on the channel severity

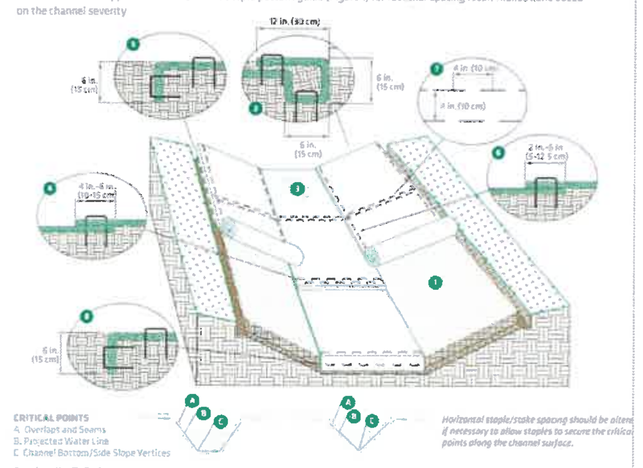

Drawings Not To Scale

CHANNEL INSTALLATION STEPS

1. Prepare soil before installing RECPs, including any necessary application of lime, fertilizer and seed
2. Begin at the top of the channel by anchoring the RECPs in a 6 in. (15 cm) deep x 6 in. (15 cm) wide trench with approximately 12 in. (30 cm) of RECPs extended beyond the upslope portion of the trench. For supplemental scour protection, use RevetMax™ System ShoreMax® Mat at the channel/culvert outlet as needed. Anchor the RECPs with a row of staples/stakes approximately 12 in. (30 cm) apart in the bottom of the trench. Backfill and compact the trench after stapling. Apply seed to the compacted soil and fold the remaining 12 in. (30 cm) portion of RECPs back over the seed and compacted soil. Secure RECPs over compacted soil with a row of staples/stakes spaced approximately 12 in. (30 cm) apart across the width of the RECPs.
3. Roll center RECPs in direction of water flow in bottom of channel. RECPs will unroll with appropriate side against the soil surface. All RECPs must be securely fastened to soil surface by placing staples/stakes in appropriate locations as shown in the staple pattern guide.
4. Place consecutive RECPs end-over-end (shingle style) with a 4 in.-6 in. (10-15 cm) overlap. Use a double row of staples staggered 4 in. (10 cm) apart and 4 in. (10 cm) on center to secure RECPs.
5. Full-length edge of RECPs at top of side slopes must be anchored with a row of staples/stakes approximately 12 in. (30 cm) apart in a 6 in. (15 cm) deep x 6 in. (15 cm) wide trench. Backfill and compact the trench after stapling.
6. Adjacent RECPs must be overlapped approximately 2 in.-5 in. (5-12.5 cm) (depending on RECP type) and stapled*
7. In high flow channel applications a staple check slot is recommended at 30 to 40 ft (9-12 m) intervals. Use a double row of staples staggered 4 in. (10 cm) apart and 4 in. (10 cm) on center over entire width of the channel.
8. The terminal end of the RECPs must be anchored with a row of staples/stakes approximately 12 in. (30 cm) apart in a 6 in. (15 cm) deep x 6 in. (15 cm) wide trench. Backfill and compact the trench after stapling.

**NOTE:* *In adverse soil conditions longer staples/stakes or earth anchors may be necessary to properly secure the RECPs.*

Erosion Control Channel Installation Detail

N.T.S.

The following slope guide outlines general recommendations for installing RollMax™ System temporary and/or permanent RECPs on sloping applications. Consult the staple pattern guide (Figure 1) for fastener spacing recommendations based on the slope severity.

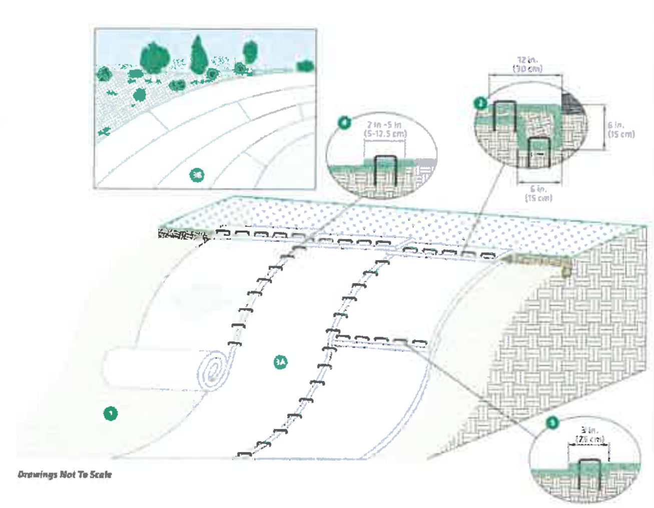

Drawings Not To Scale

SLOPE INSTALLATION STEPS

1. Prepare soil before installing RECPs, including any necessary application of lime, fertilizer and seed
2. Begin at the top of the slope by anchoring the RECPs in a 6 in. (15 cm) deep x 6 in. (15 cm) wide trench with approximately 12 in. (30 cm) of RECPs extended beyond the upslope portion of the trench. Anchor the RECPs with a row of staples/stakes approximately 12 in. (30 cm) apart in the bottom of the trench. Backfill and compact the trench after stapling. Apply seed to the compacted soil and fold the remaining 12 in. (30 cm) portion of RECPs back over the seed and compacted soil. Secure RECPs over compacted soil with a row of staples/stakes spaced approximately 12 in. (30 cm) apart across the width of the RECPs.
3. Roll the RECPs (3A) down or (3B) horizontally across the slope. RECPs will unroll with appropriate side against the soil surface. All RECPs must be securely fastened to soil surface by placing staples/stakes in appropriate locations as shown in the staple pattern guide.
4. The edges of parallel RECPs must be stapled with an approximately 2 in.-5 in. (5-12.5 cm) overlap depending on the RECP type.
5. Consecutive RECPs spliced down the slope must be end-over-end (shingle style) with an approximate 3 in. (7.5 cm) overlap. Staple through overlapped area, approximately 12 in. (30 cm) apart across entire RECPs width.*

**NOTE:* *In adverse soil conditions longer staples/stakes or earth anchors may be necessary to properly secure the RECPs.*

Erosion Control Slope Installation Detail

N.T.S.

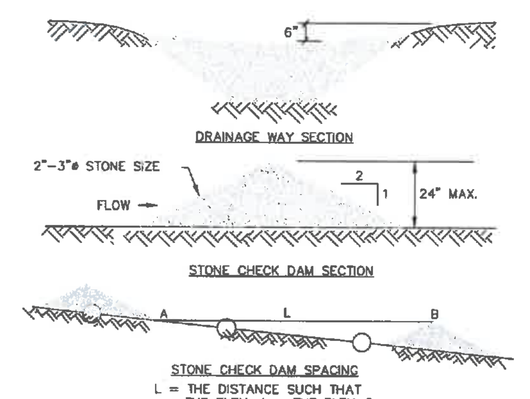

MAINTENANCE:

1. TEMPORARY GRADE STABILIZATION STRUCTURES SHOULD BE CHECKED AFTER EACH RAINFALL AND AT LEAST DAILY DURING PROLONGED STORMS. ANY NECESSARY REPAIRS SHOULD BE MADE IMMEDIATELY. PARTICULAR ATTENTION SHOULD BE GIVEN TO END RUN AND EROSION AT THE DOWNSTREAM TOE OF THE STRUCTURE. WHEN THE STRUCTURES ARE REMOVED, THE DISTURBED PORTION SHOULD BE BROUGHT TO THE EXISTING CHANNEL GRADE AND THE AREAS PREPARED, SEEDED AND MULCHED. WHILE THIS PRACTICE IS NOT INTENDED TO BE USED PRIMARILY FOR SEDIMENT TRAPPING, SOME SEDIMENT WILL ACCUMULATE BEHIND THE STRUCTURES. SEDIMENT SHALL BE REMOVED FROM BEHIND THE STRUCTURES WHEN IT HAS ACCUMULATED TO ONE HALF OF THE ORIGINAL HEIGHT OF THE STRUCTURE.

CONSTRUCTION SPECIFICATIONS:

1. DAMS SHALL BE INSTALLED AT THE LOCATIONS SHOWN ON THE PLANS.
2. CONSTRUCTION OPERATIONS SHALL BE CARRIED OUT IN SUCH A MANNER SO THAT EROSION AND AIR AND WATER POLLUTION WILL BE MINIMIZED.
3. STRUCTURES SHALL BE REMOVED FROM THE CHANNEL WHEN THEIR USEFUL LIFE HAS BE COMPLETED.
4. STONE SHALL BE FRACTURED FACE STONE. D50 SIZE SHALL BE 2 TO 3 INCHES. NO STONE SMALLER THAN 1-1/2 INCHES OR LARGER THAN 4 INCHES SHALL BE USED.

Typical Stone Check Dam Detail

N.T.S.

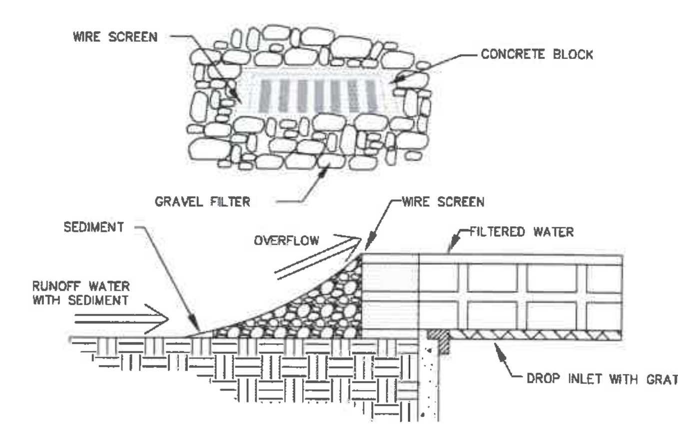

Block and Gravel Inlet Sediment Filter

N.T.S.

No.	DATE	DESCRIPTION	DESIGNER	REVIEWER
5.	10/26/2021	REVS PER NHDES	ACD	BAP
4.	09/21/2021	REVS PER NHF&G AND WETLANDS	ACD	BAP
3.	07/20/2021	REVS PER CITY, DES WETLANDS, AND F&G	ACD	BAP
2.	05/05/2021	REVS PER CITY TRG, PB, AOT,& WETLANDS	ACD	BAP
1.	03/15/2021	REVS PER CITY TRG COMMENTS	ACD	BAP

STATE OF NEW HAMPSHIRE — ARMAND ALPHONSE DUBOIS III — No. 11921 — 10/26/2021 — LICENSED PROFESSIONAL ENGINEER

SCALE: HORZ.: N/A VERT.: N/A
DATUM: HORZ.: VERT.:
GRAPHIC SCALE 0

FUSS & O'NEILL
50 COMMERCIAL STREET
MANCHESTER, NEW HAMPSHIRE 03101
603.668.8223
www.fando.com

EFI EXPRESS
CIVIL DETAILS
EROSION CONTROL
TAX MAP 257 LOT 66
TEBBETTS ROAD
ROCHESTER NEW HAMPSHIRE

PROJ. No.: 20200846.A10
DATE: JANUARY 2021

CD-508

File Path: J:\DWG\P2020\0846\A10\Civil\Plan\20200846.A10_DET 2021-03.dwg Layout: CD-508 Plotted: Mon, November 15, 2021 - 1:27 PM User: adubois
Plotter: DWG TO PDF.PC3 CTB File: FO.STB
MS VIEW: LAYER STATE:

INVASIVE SPECIES NOTE

1. THE CONTRACTOR SHALL TAKE STEPS TO PREVENT THE SPREAD OF INVASIVE PLANT, INSECT, AND FUNGAL SPECIES BY MEETING THE REQUIREMENTS AND INTENT OF RSA 430:53 AND AGR 3800 RELATIVE TO INVASIVE SPECIES. http://gencourt.state.nh.us/rules/state_agencies/agr3800.html

DUST CONTROL NOTE

1. THE CONTRACTOR SHALL, IN ACCORDANCE WITH ENV-A 1000 "...TAKE PRECAUTIONS THROUGHOUT THE DURATION OF THE ACTIVITY IN ORDER TO PREVENT, ABATE, AND CONTROL THE EMISSION OF FUGITIVE DUST INCLUDING BUT NOT LIMITED TO WETTING, COVERING, SHIELDING, OR VACUUMING."

MAINTENANCE NOTES

SILT FENCE/ FILTER SOCK

1. SILT FENCE/ FILTER SOCK SHALL BE INSPECTED IMMEDIATELY AFTER EACH RAINFALL AND AT LEAST DAILY DURING PROLONGED RAINFALL. ANY REPAIRS THAT ARE REQUIRED SHALL BE MADE IMMEDIATELY.
2. IF THE FABRIC ON A SILT FENCE OR THE FILTER SOCK SHOULD DECOMPOSE OR BECOME INEFFECTIVE DURING THE EXPECTED LIFE OF THE FENCE OR FILTER SOCK, THE FABRIC OR FILTER SOCK SHALL BE REPLACED PROMPTLY.
3. SEDIMENT DEPOSITS SHOULD BE INSPECTED AFTER EVERY STORM EVENT. THE DEPOSITS SHOULD BE REMOVED WHEN THEY REACH APPROXIMATELY ONE-HALF THE HEIGHT OF THE BARRIER.
4. SEDIMENT DEPOSITS THAT ARE REMOVED OR LEFT IN PLACE AFTER THE FABRIC HAS BEEN REMOVED SHALL BE GRADED TO CONFORM WITH THE EXISTING TOPOGRAPHY AND VEGETATED.

BLOCK & GRAVEL INLET SEDIMENT FILTER

1. ALL STRUCTURES SHOULD BE INSPECTED AFTER EVERY RAIN STORM AND REPAIRS MADE AS NECESSARY. SEDIMENT SHOULD BE REMOVED FROM THE TRAPPING DEVICES AFTER THE SEDIMENT HAS REACHED A MAX. OF 1/2 THE DEPTH OF THE TRAP. THE SEDIMENT SHOULD BE DISPOSED OF IN A SUITABLE AREA AND PROTECTED FROM EROSION BY EITHER STRUCTURAL OR VEGETATIVE MEANS. THE TEMPORARY TRAPS SHOULD BE REMOVED AND THE AREA REPAIRED AS SOON AS THE CONTRIBUTING DRAINAGE AREA TO THE INLET HAS BEEN COMPLETELY STABILIZED.

BIORETENTION AREAS & SEDIMENT FOREBAY

1. THE BOTTOM, INTERIOR AND EXTERIOR SIDE SLOPES AND CREST OF EARTHEN DETENTION PONDS SHALL BE MOWED, AND THE VEGETATION MAINTAINED IN HEALTHY CONDITION, AS APPROPRIATE TO THE FUNCTION OF THE FACILITY AND TYPE OF VEGETATION.
2. VEGETATED EMBANKMENTS THAT SERVE AS "BERMS" THAT IMPOUND WATER SHALL BE MOWED AT LEAST ONCE ANNUALLY TO PREVENT THE ESTABLISHMENT OF WOODY VEGETATION.
3. EMBANKMENTS SHALL BE INSPECTED AT LEAST ANNUALLY BY A QUALIFIED PROFESSIONAL FOR SETTLEMENT, EROSION, SEEPAGE, ANIMAL BURROWS, WOODY VEGETATION AND OTHER CONDITIONS THAT COULD DEGRADE THE EMBANKMENT AND REDUCE ITS STABILITY FOR IMPOUNDING WATER. IMMEDIATE CORRECTIVE ACTION SHOULD BE IMPLEMENTED IF ANY SUCH CONDITIONS ARE FOUND.
4. INLET AND OUTLET PIPES, INLET AND OUTLET STRUCTURES, ENERGY DISSIPATION STRUCTURES OR PRACTICES AND OTHER STRUCTURAL APPURTENANCES SHOULD BE INSPECTED AT LEAST ANNUALLY BY A QUALIFIED PROFESSIONAL AND CORRECTIVE ACTION IMPLEMENTED AS INDICATED BY SUCH INSPECTION.
5. TRASH AND DEBRIS SHALL BE REMOVED FROM THE POND AND ANY INLET OR OUTLET STRUCTURES WHENEVER OBSERVED BY INSPECTION.
6. ACCUMULATED SEDIMENT SHOULD BE REMOVED WHEN IT SIGNIFICANTLY AFFECTS POND CAPACITY.

TYPICAL CONSTRUCTION SEQUENCE

1. INSTALL HAY BALE BARRIERS AND SILT FENCES IN LOCATIONS SHOWN ON PLANS AS A MINIMUM. EROSION AND SEDIMENT CONTROL MEASURES SHALL BE INSTALLED PRIOR TO ANY EARTH MOVING OPERATION. PREPARE TEMPORARY STABILIZED CONSTRUCTION ENTRANCE IN SUITABLE LOCATION.
2. INSPECT AND MAINTAIN EROSION CONTROL MEASURES ON A DAILY BASIS.
3. DAILY OR AS REQUIRED, CONSTRUCT TEMPORARY BERMS, CULVERTS, DITCHES, SILTATION FENCES, SEDIMENT TRAPS, ETC. MULCH AND SEED AS REQUIRED.
4. CUT AND CLEAR TREES, DISPOSE OF DEBRIS IN AN APPROVED OFF-SITE LOCATION.
5. THE WORK AREA SHALL BE GRADED, SHAPED AND OTHERWISE DRAINED IN SUCH A MANNER AS TO MINIMIZE SOIL EROSION, SILTATION OF DRAINAGE CHANNELS, DAMAGE TO EXISTING VEGETATION, AND DAMAGE TO PROPERTY OUTSIDE LIMITS OF THE WORK AREA. SILT FENCES, FILTER SOCK AND/OR DETENTION BASINS WILL BE NECESSARY TO ACCOMPLISH THIS.
6. TOPSOIL SHALL BE STRIPPED AND STOCKPILED DURING DRY CONDITIONS AND WITHOUT COMPACTION. TOPSOIL SHALL BE STABILIZED AGAINST EROSION.
7. REMOVE ONSITE UNDESIRABLE SOILS AND LEDGE.
8. GRUBBING AND STUMPING DISPOSAL IN AN APPROVED OFF-SITE LOCATION.
9. CONSTRUCT ALL DITCHES AND SWALES.
10. ALL DITCHES AND SWALES, SHALL BE STABILIZED PRIOR TO DIRECTING ANY STORM WATER INTO THEM.
11. CONSTRUCT SLOPED EMBANKMENTS.
12. ROUGH GRADE SITE OR PHASED WORK AREA. DISTURBED AREAS SHALL BE STABILIZED UPON COMPLETION OF ROUGH GRADING PER THE EROSION CONTROL NOTES.
13. INSTALL ALL UNDERGROUND UTILITIES.
14. INSTALL DRAINAGE STRUCTURES, CULVERTS, HEADWALLS, RIP RAP, AND OTHER DRAINAGE FACILITIES. PLACE CATCH BASIN RIMS IN DANDY BAGS UNTIL PARKING AREAS ARE PAVED. STORMWATER PONDS, INFILTRATION BASINS AND SWALES MUST BE STABILIZED PRIOR TO DIRECTING RUNOFF TO THEM.
15. FINISH GRADING, LOAMING AND SEEDING. ALL DISTURBED AREAS SHALL BE STABILIZED WITHIN 72 HOURS AFTER FINAL GRADING.
16. COMPLETE PERMANENT SEEDING AND LANDSCAPING.
17. TEMPORARY EROSION CONTROL MEASURES SHALL BE MAINTAINED UNTIL ALL DISTURBED AREAS ARE STABILIZED AND HAVE A HEALTHY VEGETATIVE COVER.
18. CLEAN ALL DRAINAGE STRUCTURE SUMPS OF SEDIMENT AND DEBRIS (INCLUDES ALL STRUCTURES WITHIN THE LIMITS OF WORK).
19. DUST SHALL BE CONTROLLED DURING CONSTRUCTION BY ADEQUATE USE OF WATER.

WINTER EROSION CONTROL NOTES

1. ALL PROPOSED VEGETATED AREAS WHICH DO NOT EXHIBIT A MINIMUM OF 85% GROWTH BY OCTOBER 15TH, OR WHICH ARE DISTURBED AFTER OCTOBER 15TH, SHALL BE STABILIZED BY SEEDING AND INSTALLING EROSION CONTROL BLANKETS ON SLOPES GREATER THAN 3:1, AND SEEDING AND PLACING 3 TO 4 TONS OF MULCH PER ACRE, SECURED WITH ANCHORED NETTING ELSEWHERE. THE INSTALLATION OF EROSION CONTROL BLANKETS OR MULCH AND NETTING SHALL NOT OCCUR OVER ACCUMULATED SNOW OR ON FROZEN GROUND AND SHALL BE COMPLETED IN ADVANCE OF THAW OR SPRING MELT EVENTS;
2. ALL DITCHES OR SWALES WHICH DO NOT EXHIBIT A MINIMUM OF 85% VEGETATIVE GROWTH BY OCTOBER 15TH, OR WHICH ARE DISTURBED AFTER OCTOBER 15TH, SHALL BE STABILIZED TEMPORARILY WITH STONE OR EROSION CONTROL BLANKETS APPROPRIATE FOR THE DESIGN FLOW CONDITIONS; AND
3. AFTER OCTOBER 15TH, INCOMPLETE ROAD OR PARKING SURFACES, WHERE WORK HAS STOPPED FOR THE WINTER SEASON, SHALL BE PROTECTED WITH A MINIMUM OF 3 INCHES OF CRUSHED GRAVEL PER NHDOT ITEM 304.3.

TYPICAL EROSION CONTROL NOTES

DURING CONSTRUCTION AND THEREAFTER, EROSION CONTROL MEASURES ARE TO BE IMPLEMENTED AS NOTED:

1. INSTALLATION OF PERIMETER CONTROLS (SILT FENCE OR FILTER SOCK) SHALL BE COMPLETED PRIOR TO THE START OF SITE WORK IN ANY GIVEN AREA. PREFABRICATED SILT FENCES SHALL BE INSTALLED ACCORDING TO THE MANUFACTURES' RECOMMENDATIONS.
2. PERIMETER CONTROLS SHALL BE KEPT CLEAN DURING CONSTRUCTION AND REMOVED WHEN ALL SLOPES HAVE A HEALTHY STAND OF VEGETATIVE COVER. EROSION CONTROL MEASURES SHALL BE INSPECTED ON A WEEKLY BASIS AND AFTER EVERY RAINFALL.
3. EXISTING VEGETATION IS TO REMAIN UNDISTURBED WHEREVER POSSIBLE.
4. NO MORE THAN FIVE ACRES OF LAND SHALL BE LEFT DISTURBED AT ANY ONE TIME. ALL DISTURBED AREAS SHALL BE STABILIZED WITHIN 72 HOURS AFTER FINAL GRADING.
5. STABILIZATION SHALL INCLUDE THE FOLLOWING, AT A MINIMUM:
   A. INSTALLATION OF BASE COURSE GRAVELS (IN PAVED AREAS)
   B. MIN. 85% VEGETATED GROWTH
   C. INSTALLATION OF STONE OR RIP RAP MATERIAL (3" MIN. DEPTH)
   D. PROPERLY INSTALLED EROSION CONTROL BLANKETS
6. ALL DISTURBED AREAS SHALL HAVE A MINIMUM OF 4" OF LOAM INSTALLED WITH NOT LESS THAN 1.1 POUNDS OF SEED MIX PER 1,000 SQ. FT. SEED MIXTURE SHALL BE:

PERMANENT	
TALL FESCUE	0.45 LBS.
CREEPING RED FESCUE	0.45 LBS.
BIRDSFOOT TREFOIL	0.20 LBS.
TEMPORARY	
ANNUAL RYEGRASS	1.10 LBS.

7. LIME AND FERTILIZER SHALL BE INCORPORATED INTO THE SOIL PRIOR TO SEEDING. A MINIMUM OF 2 TONS PER ACRE OF AGRICULTURAL LIMESTONE AND 500 LBS. PER ACRE OF 10-20-20 FERTILIZER SHALL BE APPLIED. SEEDING PRACTICES SHALL COMPLY WITH LOCAL USDA SOIL CONSERVATION SERVICES RECOMMENDATIONS.
8. HAY MULCH OR JUTE MATTING SHALL BE USED WHERE INDICATED ON THE PLANS. A MINIMUM OF 1.5 TONS OF MULCH PER ACRE SHALL BE APPLIED. MULCH SHALL BE ANCHORED IN PLACE WHERE NECESSARY. JUTE MATTING SHALL BE LAID IN THE DIRECTION OF RUNOFF FLOW AND APPLIED IN ACCORDANCE WITH MANUFACTURERS INSTRUCTIONS.
9. PERMANENT OR TEMPORARY COVER MUST BE IN PLACE BEFORE THE GROWING SEASON ENDS. WHEN SEEDED AREAS ARE MULCHED, PLANTINGS BAY BE MADE FROM EARLY SPRING TO EARLY OCTOBER. WHEN SEEDED AREAS ARE NOT MULCHED, PLANTINGS SHOULD BE MADE FROM EARLY SPRING TO MAY 20 OR FROM AUGUST 15 TO SEPTEMBER 15. NO DISTURBED AREA SHALL BE LEFT EXPOSED DURING WINTER MONTHS, PLANT ANNUAL RYE GRASS PRIOR TO OCTOBER 15TH.
10. THE LAND AREA EXPOSED SHOULD BE KEPT TO THE SHORTEST PRACTICAL PERIOD OF TIME AND SHALL NOT REMAIN EXPOSED MORE THAN 45 DAYS FROM INITIAL DISTURBANCE.
11. THE SMALLEST PRACTICAL AREA SHALL BE DISTURBED DURING CONSTRUCTION, BUT IN NO CASE SHALL EXCEED 5 ACRES AT ANY ONE TIME BEFORE DISTURBED AREAS ARE STABILIZED
12. AN AREA SHALL BE CONSIDERED STABLE IF ONE OF THE FOLLOWING HAS OCCURRED:
    - BASE COURSE GRAVELS HAVE BEEN INSTALLED IN AREAS TO BE PAVED
    - A MINIMUM OF 85% OF VEGETATED GROWTH HAS BEEN ESTABLISHED
    - A MINIMUM OF 3" NON EROSIVE MATERIAL SUCH AS STONE OR RIPRAP HAS BEEN INSTALLED
    - EROSION CONTROL BLANKETS HAVE BEEN PROPERLY INSTALLED.
13. ALL CONTRIBUTING WATERSHED AREAS MUST BE FULLY STABILIZED PRIOR TO DIRECTING STORMWATER TO THEM.
14. ALL EROSION CONTROLS SHALL BE INSPECTED WEEKLY AND AFTER EVERY 0.5" OR GREATER RAINFALL WITHIN A 24-HOUR PERIOD.
15. TEMPORARY WATER DIVERSION (SEDIMENT BASINS, SWALES, ETC.) MUST BE USED AS NECESSARY TO CONTAIN RUNOFF UNTIL SOILS ARE STABILIZED.
16. CUT AND FILL SLOPES MUST BE STABILIZED WITHIN 72 HOURS OF ACHIEVING FINISHED GRADE.
17. STORMWATER BASINS AND SWALES MUST BE INSTALLED BEFORE ROUGH GRADING THE SITE.
18. STORMWATER BASINS AND SWALES MUST BE STABILIZED PRIOR TO DIRECTING RUNOFF TO THEM.

COLD WEATHER SITE STABILIZATION

PER ENV-WQ 1505.06 - COLD WEATHER SITE STABILIZATION.

A. TO ADEQUATELY PROTECT WATER QUALITY DURING COLD WEATHER AND DURING SPRING RUNOFF, THE ADDITIONAL STABILIZATION TECHNIQUES SPECIFIED IN THIS SECTION SHALL BE EMPLOYED DURING THE PERIOD FROM OCTOBER 15 THROUGH MAY 1.
B. SUBJECT TO (C), BELOW, THE AREA OF EXPOSED, UNSTABILIZED SOIL SHALL BE:
   1. LIMITED TO ONE ACRE; AND
   2. PROTECTED AGAINST EROSION BY THE METHODS DESCRIBED IN THIS SECTION PRIOR TO ANY THAW OR SPRING MELT EVENT.
C. THE ALLOWABLE AREA OF EXPOSED SOIL MAY BE INCREASED IF A WINTER CONSTRUCTION PLAN IS DEVELOPED BY A QUALIFIED ENGINEER OR A CPESC SPECIALIST AND SUBMITTED TO THE DEPARTMENT FOR APPROVAL AS A REQUEST TO WAIVE THE ONE-ACRE LIMIT.
D. SUBJECT TO (F) AND (G), BELOW, ALL PROPOSED VEGETATED AREAS HAVING A SLOPE OF LESS THAN 15% THAT DO NOT EXHIBIT A MINIMUM OF 85% VEGETATIVE GROWTH BY OCTOBER 15, OR THAT ARE DISTURBED AFTER OCTOBER 15, SHALL BE SEEDED AND COVERED WITH 3 TO 4 TONS OF HAY OR STRAW MULCH PER ACRE SECURED WITH ANCHORED NETTING OR TACKIFIER OR WITH AT LEAST 2 INCHES OF EROSION CONTROL MIX MEETING THE CRITERIA OF ENV-WQ 1506.05(B).
E. SUBJECT TO (F) AND (G), BELOW, ALL PROPOSED VEGETATED AREAS HAVING A SLOPE OF 15% OR GREATER THAT DO NOT EXHIBIT A MINIMUM OF 85% VEGETATIVE GROWTH BY OCTOBER 15, OR THAT ARE DISTURBED AFTER OCTOBER 15, SHALL BE SEEDED AND COVERED WITH A PROPERLY INSTALLED AND ANCHORED EROSION CONTROL BLANKET OR WITH AT LEAST 4 INCHES OF EROSION CONTROL MIX MEETING THE CRITERIA OF ENV-WQ 1506.05(B).
F. ANCHORED HAY MULCH OR EROSION CONTROL MIX THAT MEETS THE CRITERIA OF ENV-WQ 1506.05(B) SHALL NOT BE INSTALLED OVER SNOW GREATER THAN ONE INCH IN DEPTH.
G. EROSION CONTROL BLANKETS SHALL NOT BE INSTALLED OVER SNOW GREATER THAN ONE INCH IN DEPTH OR ON FROZEN GROUND.
H. ALL PROPOSED STABILIZATION IN ACCORDANCE WITH (D) OR (E), ABOVE, SHALL BE COMPLETED WITHIN A DAY OF ESTABLISHING THE GRADE THAT IS FINAL OR THAT OTHERWISE WILL EXIST FOR MORE THAN 5 DAYS.
I. ALL DITCHES OR SWALES THAT DO NOT EXHIBIT A MINIMUM OF 85% VEGETATIVE GROWTH BY OCTOBER 15, OR THAT ARE DISTURBED AFTER OCTOBER 15, SHALL BE STABILIZED TEMPORARILY WITH STONE OR EROSION CONTROL BLANKETS APPROPRIATE FOR THE DESIGN FLOW CONDITIONS, AS DETERMINED BY THE OWNER'S ENGINEERING CONSULTANT.
J. AFTER OCTOBER 15, INCOMPLETE ROAD OR PARKING AREAS WHERE ACTIVE CONSTRUCTION OF THE ROAD OR PARKING AREA HAS STOPPED FOR THE WINTER SEASON SHALL BE PROTECTED WITH A MINIMUM 3-INCH LAYER OF BASE COURSE GRAVELS MEETING THE GRADATION REQUIREMENTS OF NHDOT STANDARD SPECIFICATION FOR ROAD AND BRIDGE CONSTRUCTION, 2016, TABLE 304-1, ITEM NO. 304.1, 304.2, OR 304.3, AVAILABLE AS NOTED IN APPENDIX B.

TEMPORARY SEDIMENT TRAP NOTES

1. TEMPORARY SEDIMENT TRAPS SHOULD MEET THE FOLLOWING REQUIREMENTS:
   - SEDIMENT TRAPS SHOULD BE LOCATED SO THAT THEY CAN BE INSTALLED PRIOR TO DISTURBING THE AREA THEY ARE TO PROTECT.
   - THE TRAP SHOULD BE INSTALLED AS CLOSE TO THE DISTURBED AREA OR SOURCE OF SEDIMENT AS POSSIBLE.
   - THE MAXIMUM CONTRIBUTING DRAINAGE AREA TO THE TRAP SHOULD BE LESS THAN 5 ACRES.
   - THE MINIMUM VOLUME OF THE TRAP SHOULD BE 3,600 CUBIC FEET OF STORAGE FOR EACH ACRE OF DRAINAGE AREA.
   - THE SIDE SLOPES OF THE TRAP SHOULD BE 3:1 OR FLATTER, AND SHOULD BE STABILIZED IMMEDIATELY AFTER THEIR CONSTRUCTION.
2. EMBANKMENTS:
   - THE MAXIMUM HEIGHT OF THE SEDIMENT TRAP EMBANKMENT SHOULD BE 4 FEET WHEN MEASURED FROM THE LOWEST POINT OF NATURAL GROUND ON THE DOWNSTREAM SIDE OF THE EMBANKMENT.
   - THE MINIMUM TOP WIDTH OF THE EMBANKMENT SHOULD BE 6 FEET.
3. OUTLETS (GENERAL REQUIREMENTS):
   - THE OUTLET SHOULD BE DESIGNED, CONSTRUCTED AND MAINTAINED IN SUCH A MANNER THAT SEDIMENT DOES NOT LEAVE THE TRAP AND THAT EROSION AT OR BELOW THE OUTLET DOES NOT OCCUR.
   - OUTLETS SHOULD BE DESIGNED SO THAT THE TOP OF THE EMBANKMENT IS A MINIMUM OF 1 FOOT ABOVE THE CREST ELEVATION OF THE OUTLET.
   - THE OUTLET OF THE TRAP SHOULD BE A MINIMUM OF ONE FOOT BELOW THE CREST OF THE TRAP
   - THE OUTLET SHOULD DISCHARGE TO A STABILIZED AREA. THE OUTLETS MUST EMPTY ONTO UNDISTURBED GROUND, INTO A WATERCOURSE, STABILIZED CHANNEL OR A STORM SEWER SYSTEM.
   - OUTLETS MAY BE CONSTRUCTED AS EARTH SPILLWAYS, STONE OUTLETS, OR PIPE OUTLETS.
4. EARTH OUTLETS:
   - AN EARTH OUTLET SEDIMENT TRAP HAS A DISCHARGE POINT THAT IS EITHER OVER NATURAL GROUND OR CUT INTO NATURAL GROUND.
   - THE OUTLET WIDTH SHOULD BE EQUAL TO 6 TIMES THE DRAINAGE AREA IN ACRES.
   - THE EMBANKMENT AND OUTLET SHOULD BE VEGETATED WITHIN 3 DAYS OF CONSTRUCTION.
5. STONE OUTLETS:
   - A STONE OUTLET SEDIMENT TRAP HAS AN OUTLET CONSISTING OF A CRUSHED STONE SECTION IN THE EMBANKMENT.
   - THE STONE SECTION SHOULD BE LOCATED AT THE LOW POINT OF THE NATURAL GROUND, AS DETERMINED AT THE DOWNSTREAM SIDE OF THE EMBANKMENT.
   - THE OUTLET SHOULD BE CONSTRUCTED OF MINIMUM SIZE 1 ½ CRUSHED STONE.
6. VEGETATION:
   - ALL EMBANKMENTS, EARTH SPILLWAYS, AND DISTURBED AREAS BELOW THE STRUCTURE SHOULD BE VEGETATED WITHIN 72 HOURS OF COMPLETION OF THE CONSTRUCTION OF THE STRUCTURE.
   - IF THE STRUCTURE IS NOT PLANNED FOR MORE THAN ONE VEGETATIVE GROWING SEASON, THE STRUCTURE MAY BE VEGETATED USING THE RECOMMENDATION OF THE TEMPORARY VEGETATION BEST MANAGEMENT PRACTICE DESCRIBED IN NHDES STORMWATER MANAGEMENT MANUAL, VOL. 2.
   - BASINS THAT WILL BE CARRIED OVER THE WINTER AND INTO THE NEXT VEGETATIVE GROWING SEASON SHOULD BE VEGETATED USING THE RECOMMENDATIONS FOR PERMANENT VEGETATION BEST MANAGEMENT PRACTICE.

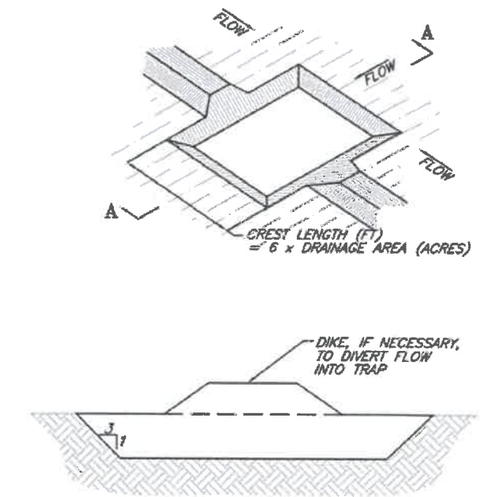

Earth Outlet Temporary Sediment Trap

N.T.S.

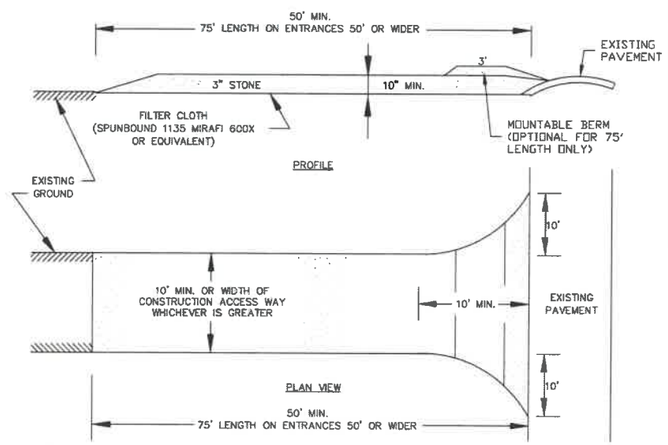

1. FILTER CLOTH - WILL BE PLACED OVER THE ENTIRE AREA PRIOR TO PLACING OF STONE.
2. SURFACE WATER - ALL SURFACE WATER FLOWING OR DIVERTED TOWARD CONSTRUCTION ENTRANCES SHALL BE PIPED ACROSS THE ENTRANCE. IF PIPING IS IMPRACTICAL, A MOUNTABLE BERM WITH 5:1 SLOPES WILL BE PERMITTED
3. MAINTENANCE - THE ENTRANCE SHALL BE MAINTAINED IN A CONDITION WHICH WILL PREVENT TRACKING OR FLOWING OF SEDIMENT ONTO PUBLIC RIGHTS-OF-WAY. THIS MAY REQUIRE PERIODIC TOP DRESSING WITH ADDITIONAL STONE AS CONDITIONS DEMAND AND REPAIR AND/OR CLEANOUT OF ANY MEASURES USED TO TRAP SEDIMENT. ALL SEDIMENT SPILLED, DROPPED, WASHED OR TRACKED ONTO PUBLIC RIGHTS-OF-WAY MUST BE REMOVED IMMEDIATELY.
4. WASHING - WHEELS SHALL BE CLEANED TO REMOVE SEDIMENT PRIOR TO ENTRANCE ONTO

USDA - SCS Stabilized Construction Entrance

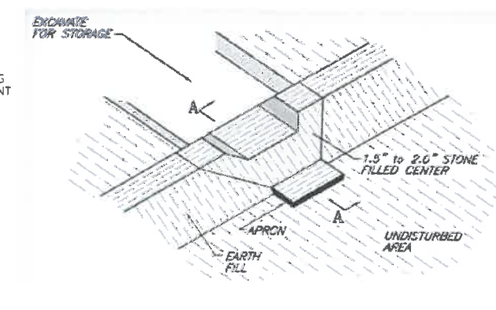

Temporary Sediment Trap

N.T.S.

No.	DATE	DESCRIPTION	DESIGNER	REVIEWER
5.	10/26/2021	REVS PER NHDES	ACD	BAP
4.	09/21/2021	REVS PER NHF&G AND WETLANDS	ACD	BAP
3.	07/20/2021	REVS PER CITY, DES WETLANDS, AND F&G	ACD	BAP
2.	05/05/2021	REVS PER CITY TRG, PB, AOF,& WETLANDS	ACD	BAP
1.	03/15/2021	REVS PER CITY TRG COMMENTS	ACD	BAP

SCALE: HORZ.: N/A VERT.: N/A
DATUM: HORZ.: VERT.:
GRAPHIC SCALE

FUSS & O'NEILL
50 CONGRESSIONAL STREET
MANCHESTER, NEW HAMPSHIRE 03101
603-668-8223
www.fuss&oneill.com

EFI EXPRESS
CIVIL DETAILS
EROSION CONTROL
TAX MAP 257 LOT 66
TEBBETTS ROAD
ROCHESTER NEW HAMPSHIRE

PROJ. No.: 20200646.A10
DATE: JANUARY 2021

CD-509

File Path: J:\DWG\P2020\0646\A10\Civil\Plan\20200616.A10_DET 2021-03.dwg Layout: CD-509 Plotted: Mon, November 15, 2021 - 1:27 PM User: edubois
MS VIEW: LAYER STATE: Plotter: DWG TO PDF.PC3 CTB File: FO.STB

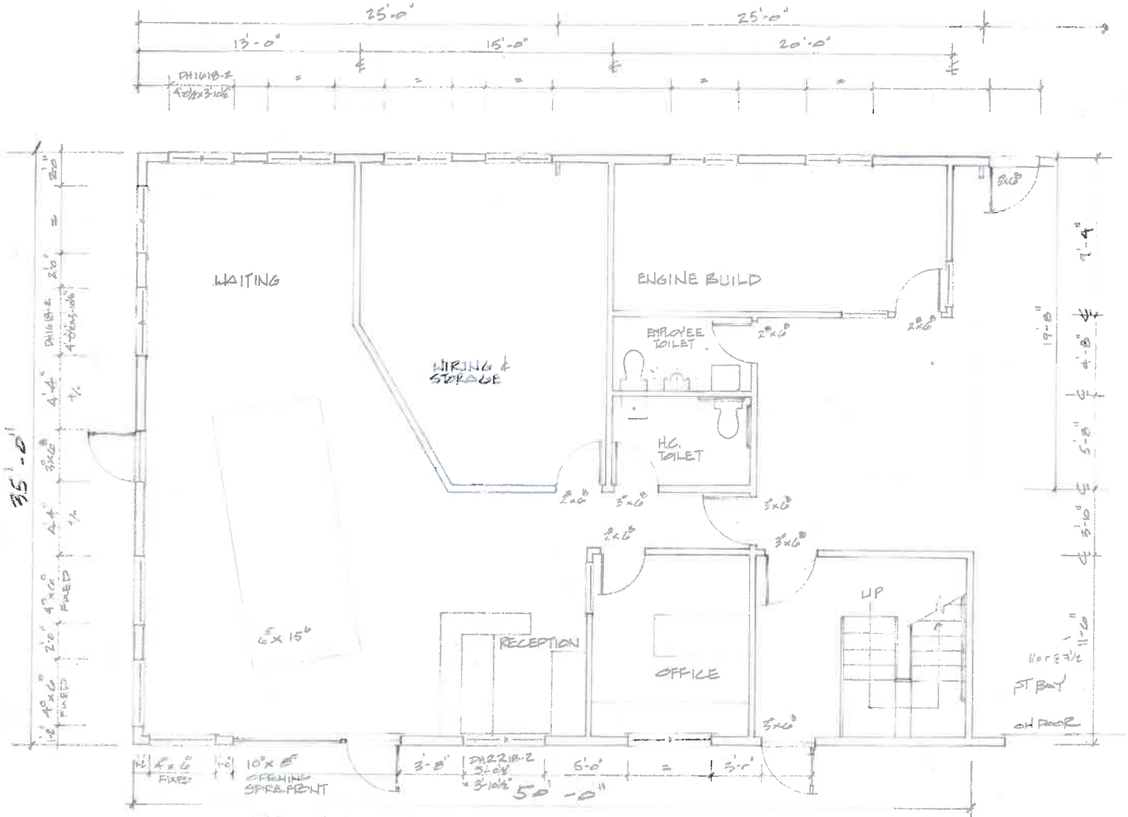

FIRST FLOOR ADMINISTRATIVE AREA APPROX. 1550 #

1/4" = 1'-0" @24x36

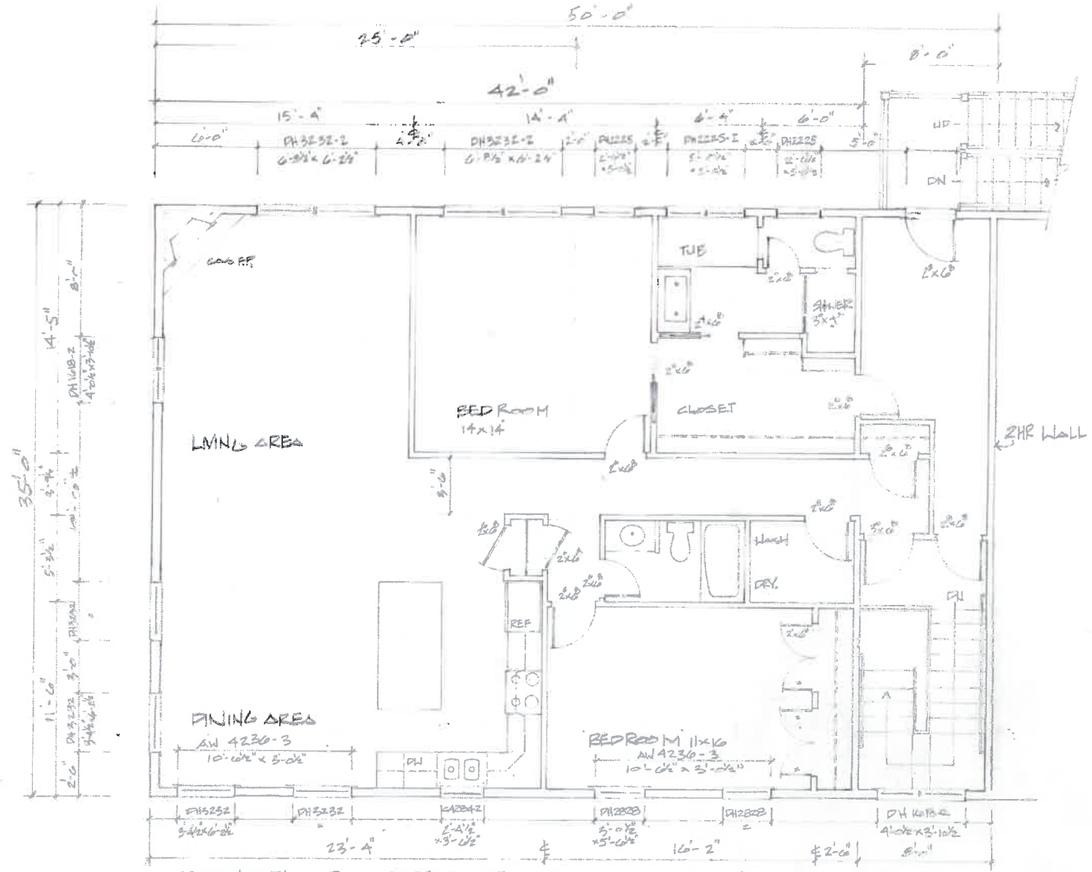

SECOND FLOOR APARTMENT AREA 2BEDROOM 1500 #

1/4" = 1'-0" @24x36

PESIGN
RWROBIN WUNDERLICH
LALDER BROOK WAY
LEE NH 03861
603 659 5717
603 608 7942 C

NEW FACILITY
EF - EXPRESS
TAX MAP 257 LOT 16
TEBBETTS ROAD
ROCHESTER, NH - 3867

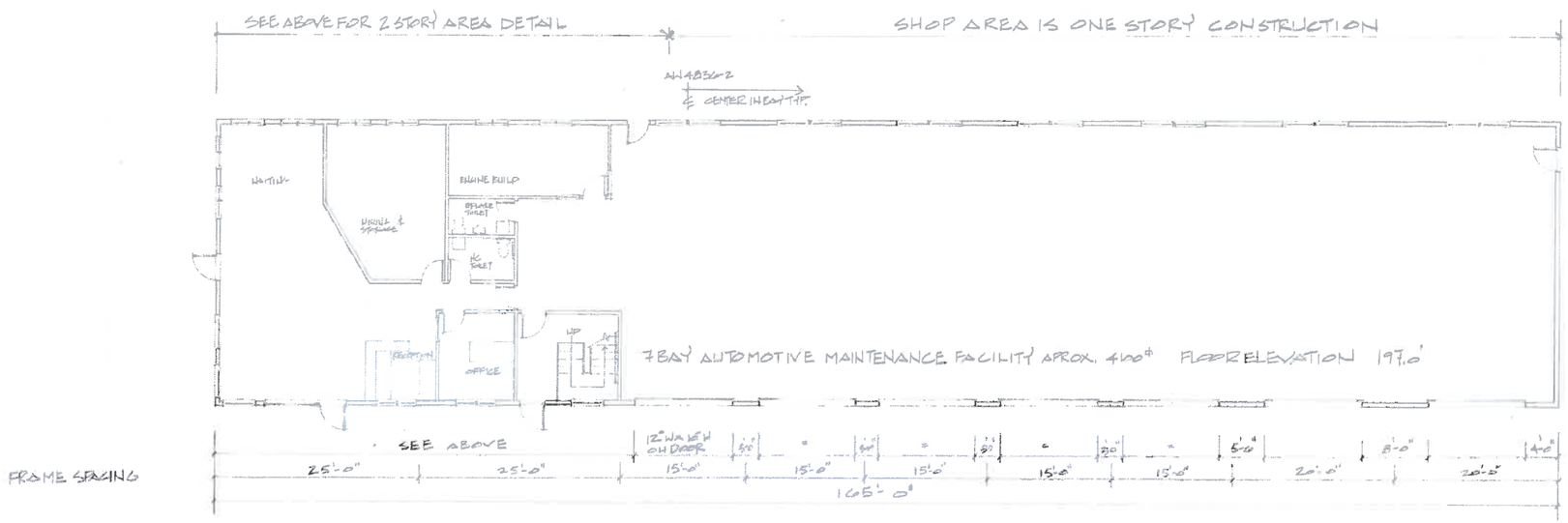

FIRST FLOOR PLAN 5775 #

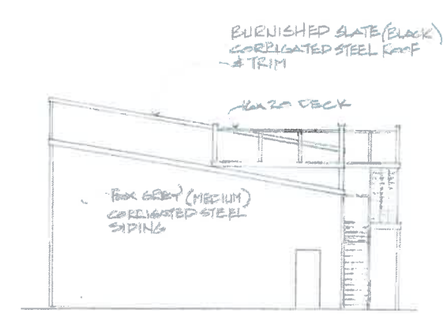

NORTH ELEVATION SHOP BUILDING

1/8" = 1'-0"

SHOP AND APARTMENT BUILDING PLANS

6-21-21

A 1
of 3

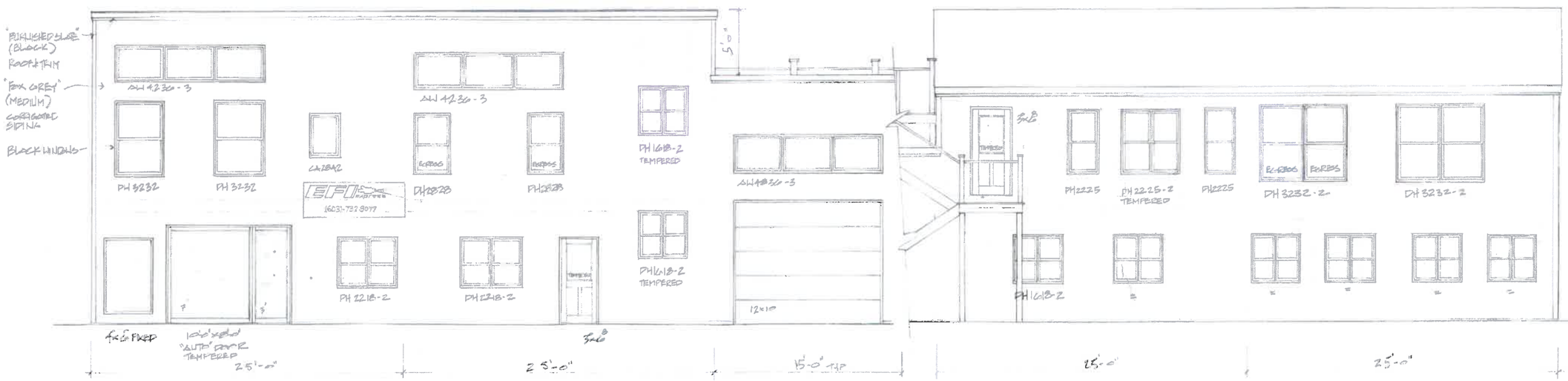

EAST ELEVATION

1/4" = 1'-0"

WEST ELEVATION

1/4" = 1'-0"

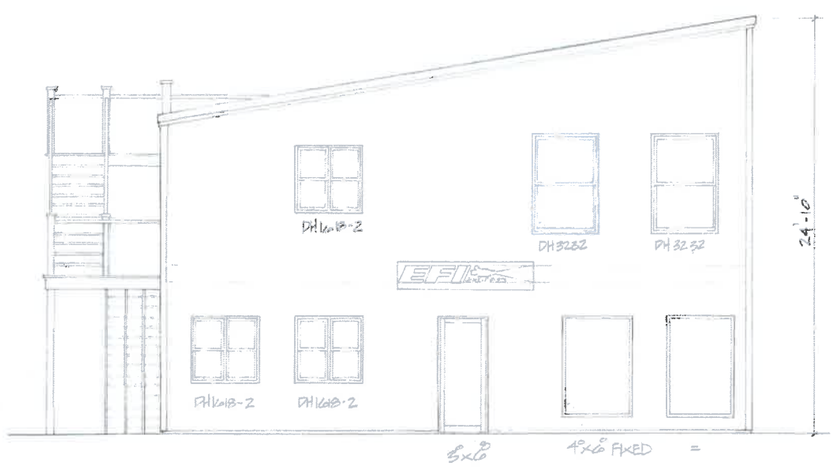

SOUTH ELEVATION

1/4" = 1'-0"

BUILDING SECTION

1/4" = 1'-0"

DESIGN
RW ROBIN WUNDERLICH
1 SLIDER BROOK WAY
LEE, NH 03861
603 659 8914 o
603 608 7942 c

NEW FACILITY
E F I EXPRESS
TAX MAP 254 LOT 6
TEBBETTS ROAD
ROCHESTER, NH 03867

1/4" PARTIAL ELEVATIONS
SHOP / APARTMENT

A2
9/13

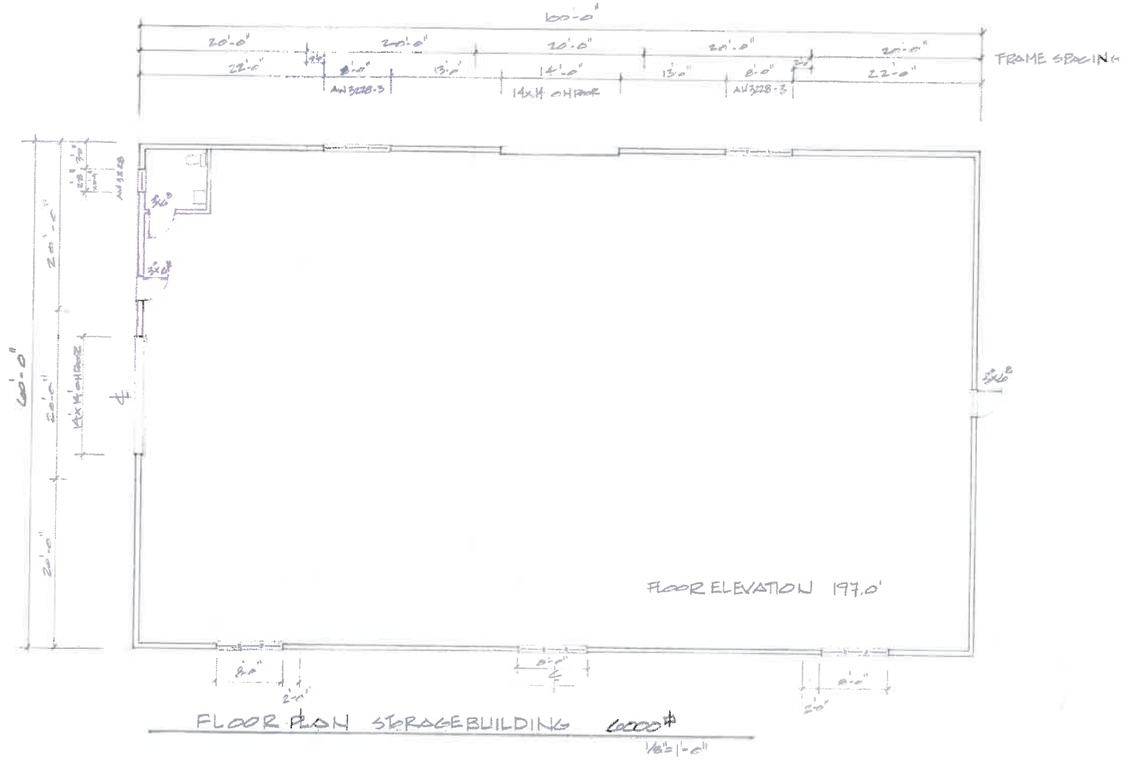

FLOOR PLAN STORAGE BUILDING 60000#

1/8"=1'-0"

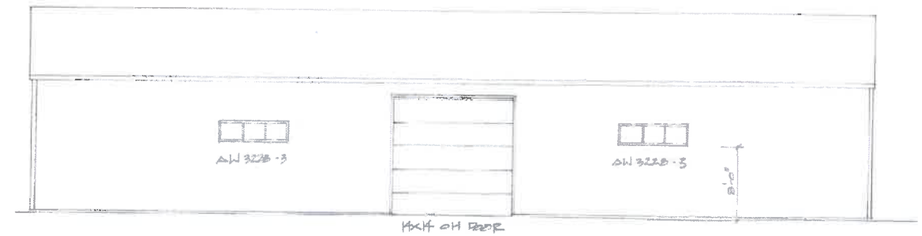

NORTH ELEVATION STORAGE BUILDING

1/8"=1'-0"

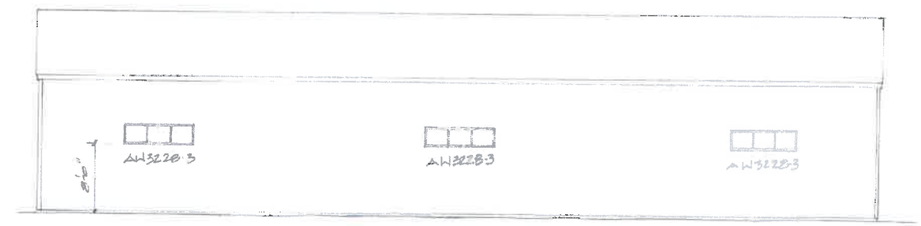

SOUTH ELEVATION STORAGE BUILDING

1/8"=1'-0"

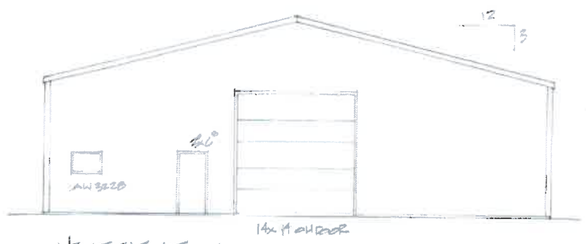

WEST ELEVATION

EAST ELEVATION

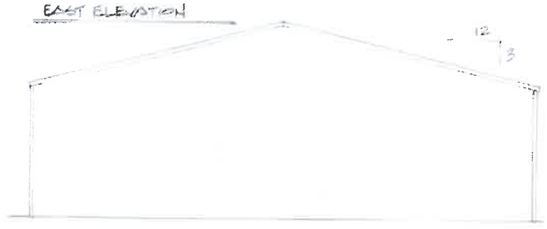

SECTION

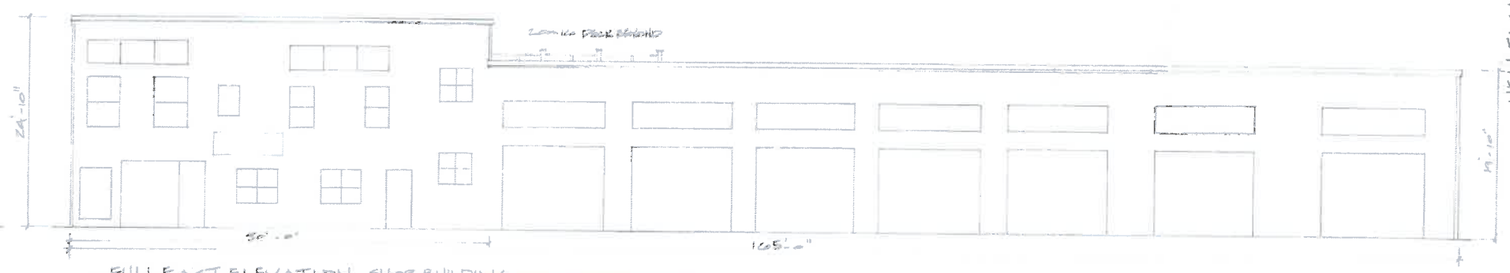

FULL EAST ELEVATION SHOP BUILDING

1/8"=1'-0"

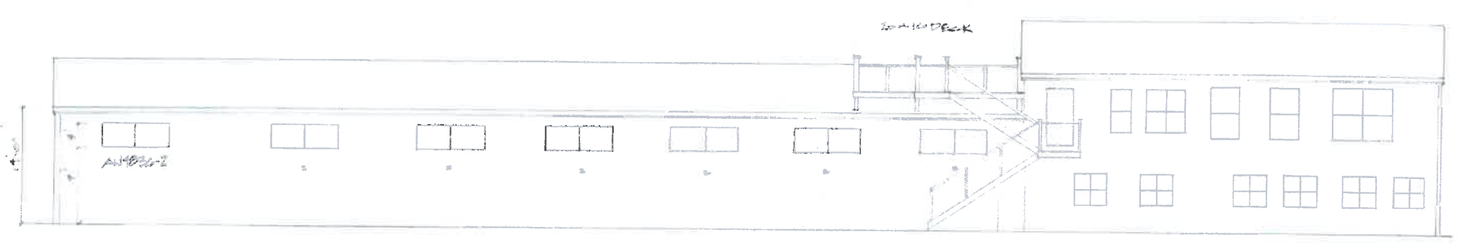

FULL WEST ELEVATION SHOP BUILDING

1/8"=1'-0"

DESIGN
ROBIN LINDBERG
LADER BROOK WAY
LEE, NH 03861
603 659 8717
603 868 7942

NEW FACILITY
E.F. EXPRESS
TAX MAP 237 LOT 66
TEBBETTS ROAD
ROCHESTER, NH 03867

STORAGE BUILDING
SHOP BLD ELEVATIONS

A3