GENERAL NOTES

1. THE INTENT OF THIS SITE PLAN IS TO PROPOSE A NEW COMMERCIAL/INDUSTRIAL FACILITY LOCATED AT INDUSTRIAL WAY AND TEN ROD ROAD IN ROCHESTER, NH.

2.CURRENT OWNER: IRM PROPERTIES LLC. 181 STAGECOACH ROAD, BARRINGTON, NH 03825

3. THE PROJECT PARCEL IS SHOWN AS LOT NO. 1, MAP 221 OF THE CITY OF ROCHESTER TAX ASSESSOR'S MAPS AND IS LOCATED IN THE GENERAL INDUSTRY (GI) AND CONSERVATION OVERLAY DISTRICT (COD) ZONES.

4. THE PROJECT PARCEL CONTAINS 6.10 ACRES OR 265,784 SQUARE FEET AREA OF LAND.

5. TITLE REFERENCE FOR THE PROJECT PARCEL IS THE STRAFFORD COUNTY REGISTRY OF DEEDS, BOOK NO. 3887 PG 715.

6. PROJECT PLAN REFERENCES: (SEE REFERENCE 1 BELOW)

7. ZONING DIMENSIONAL AND DENSITY REQUIREMENTS ARE AS FOLLOWS:

A. ZONING DISTRICT: GENERAL INDUSTRY	PROVIDED
B. MINIMUM LOT SIZE: 30,000 SQ. FT	265,789 SQ. FT.
C. MINIMUM LOT FRONTAGE: 100 FT.	895 FT.
D. MINIMUM YARD SETBACKS	
FRONT 25 FT.	25 FT.
SIDE 20 FT.	20 FT.
REAR 55 FT	
MAXIMUM LOT COVERAGE 75% (199,338 SQ. FT.)	52% (126,035 SQ. FT.)
MAXIMUM BUILDING HEIGHT 55 FT.	55 FT

8. PROPERTY LINE INFORMATION AND TOPOGRAPHY TAKEN FROM REFERENCE (1)

9. SUBJECT PARCEL IS NOT LOCATED WITHIN FEDERALLY DESIGNATED FLOOD HAZARD AREA (COMMUNITY PANEL NUMBER 33017C0203D, EFFECTIVE DATE 5/16/2005).

10.WETLAND DELINEATED BY KENNETH A. WOOD, CERTIFIED WETLAND SCIENTIST, (CERTIFICATION NUMBER N.H 00187) IN FALL OF 2019. BUFFER REDUCTION IN ACCORDANCE OF ROCHESTER CITY CODE SECTION 275 ARTICLE 12.9.

11. PARKING REQUIREMENTS ARE AS FOLLOWS
MINIMUM. 2 ADA FOR 26 TO 50 REGULAR SPACES

INDUSTRIAL
1 SPACE PER 1000 GROSS SQUARE FEET, PLUS 3 SPACES PER 1000 GROSS SQUARE FEET FOR AREA DEDICATED TO OFFICES OR RETAIL SALES.

TOTAL SPACES REQUIRED => 27 SPACES
TOTAL SPACES PROVIDED => 37 (35 REGULAR, 2 ADA (5.4%))

12. AS-BUILT PLANS OF THE SITE SHALL BE SUBMITTED ON A REPRODUCIBLE MYLAR MEDIUM AND IN A DIGITAL DXF FORMAT ON DISK TO THE CITY OF ROCHESTER ENGINEER'S OFFICE UPON COMPLETION OF THE PROJECT. AS-BUILT PLANS SHALL BE PREPARED AND CERTIFIED CORRECT BY A L.L.S OR P.E. DIGITAL FILES SHALL BE GEO-REFERENCED TO NEW.HAMPSHIRE STATE PLANE COORDINATES NAD83 AND SHALL BE EXPRESSED IN FEET.

13. EXTERIOR LIGHTING SHALL BE FULL CUT-OFF, DARK SKY COMPLIANT TYPE FIXTURES AND SHALL PROVIDE LIGHTING DIRECTED ON-SITE ONLY.

14. COMMERCIAL VEHICLE ROUTE DURING CONSTRUCTION SHALL CONFORM WITH ROCHESTER CITY CODE OR BE COORDINATED WITH THE COMMUNITY SERVICES DIRECTOR.

15. THE INSTALLATION OF ELECTRIC POWER, CABLE TELEVISION AND TELEPHONE LINES SHALL BE UNDERGROUND THROUGHOUT THE SITE FOR WHICH DEVELOPMENT IS PROPOSED. SITE PLANS SHALL SHOW ANY EASEMENTS FOR THE SERVICES.

16. THE SUBJECT PARCEL IS SERVED BY MUNICIPAL WATER AND SEWER. COORDINATION WITH ROCHESTER PUBLIC WORKS DEPARTMENT ON THE BACKFLOW PREVENTION FOR THE BUILDING WILL OCCUR PRIOR TO SEWER INSTALLATION.

17. ALL EROSION CONTROL NOTES SHALL INCLUDE PROVISIONS FOR CONSTRUCTION SEQUENCING, TEMPORARY EROSION CONTROL MEASURES, AND PERMANENT STANDARDS SUCH AS LOAD SPREAD RATE FOR DISTURBED AREAS, RATES OF LIME, TYPE AND RATES FOR FERTILIZES, AND SEED AND MULCH MIXTURE WITH RATES OF APPLICATION.

18. THE OWNER OF RECORD SHALL RECORD AT THE REGISTRY OF DEEDS DOCUMENTATION SUFFICIENT TO PROVIDE NOTICE TO ALL PERSONS THAT MAY ACQUIRE ANY PROPERTY SUBJECT TO THE REQUIREMENTS AND RESPONSIBILITIES DESCRIBED IN THE APPROVED STORMWATER MANAGEMENT PLAN. THE NOTICE SHALL COMPLY WITH THE APPLICABLE REQUIREMENTS FOR RECORDING CONTAINED IN RSA 477 AND 478. THE NOTICE NEED NOT SET FORTH THE REQUIREMENTS AT LENGTH SO LONG AS IT IS SUFFICIENT TO PROVIDE NOTICE TO PROSPECTIVE PURCHASES TO THE REQUIREMENTS FOR MAINTENANCE AND REPORTING.

19. THE LIMITS OF CONSTRUCTION DISTURBANCE THAT ARE LOCATED IN OR WITHIN THE 50 FT. OF CONSERVATION AND WETLAND DISTRICTS SHALL BE STAKED, FLAGGED, AND CLEARLY IDENTIFIED PRIOR TO THE COMMENCEMENT OF SITE WORK.

20. ALL TREATMENT SWALES TO BE CONSTRUCTED SHALL HAVE SOD BOTTOMS.

21. A LETTER OF CREDIT FOR THE COST OF REVEGETATING ALL DISTURBED AREAS ON THE SITE SHALL BE SUBMITTED PRIOR TO ANY EARTH DISTURBING ACTIVITY.

22. SITE CONSTRUCTION HOURS SHALL BE LIMITED TO MONDAY-FRIDAY 7AM-6PM SATURDAY AND SUNDAY 9AM-4PM. HOURS OF CONSTRUCTION MUST BE DOCUMENTED ON A SITE CONSTRUCTION SIGN ALONG WITH THE CONTACT INFORMATION FOR THE GENERAL CONTRACTOR. SAID SIGNAGE MUST BE LOCATED AND APPROVED BY THE CITY ENGINEER OR ASSISTANT CITY MANAGER.

23. A PRE-CONSTRUCTION CONFERENCE WITH THE DEVELOPER, THE DESIGN ENGINEER, THE EARTHWORK CONTRACTOR AND THE CITY ENGINEER SHALL OCCUR PRIOR TO ANY EARTH DISTURBING ACTIVITY.

24. ALL CONSTRUCTION SHALL CONFORM WITH THE STATE OF NEW HAMPSHIRE DEPARTMENT OF TRANSPORTATION (NHDOT) "STANDARD SPECIFICATIONS FOR ROAD AND BRIDGE CONSTRUCTION" AND THE CITY OF ROCHESTER PUBLIC WORKS REGULATIONS AND STANDARD SPECIFICATION FOR CONSTRUCTION. THE MORE STRINGENT SPECIFICATION SHALL APPLY.

25. AS PER NHDES ENV-WQ CHAPTER 1503.21(c), AS A CONDITION OF ACCEPTANCE FOR THE ALTERATION OF TERRAIN (AOT) PERMIT, A QUALIFIED ENGINEER SHALL CERTIFY THAT THE PROJECT HAS BEEN COMPLETED IN ACCORDANCE WITH THE APPROVED PLANS, OR THAT DEVIATIONS WERE MADE WHICH DID NOT REQUIRE AN AMENDED OR NEW PERMIT.

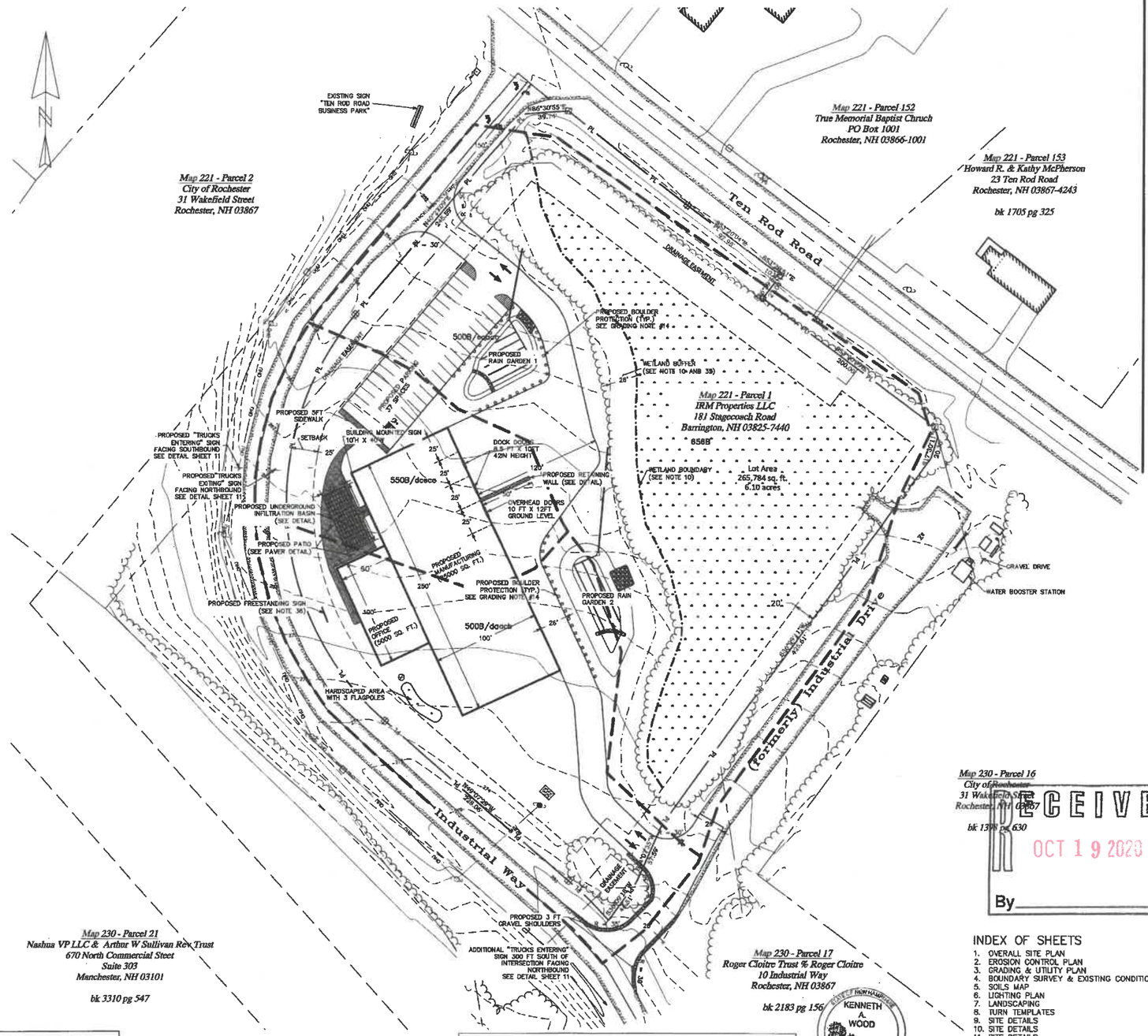

LOCUS MAP

APPROXIMATE SCALE: 1" = 2,500 FT

GENERAL NOTES (CONT.)

25. APPROVED BACKFLOW PREVENTORS SHALL BE PROVIDED FOR BOTH FIRE AND DOMESTIC WATERLINES.

26. THE PROPOSED STRUCTURE SHALL BE SERVED BY A SPRINKLER SYSTEM AS REQUIRED UNDER CODE OF THE CITY OF ROCHESTER AND THE 2015 STATE BUILDING CODES.

27. SPRINKLER CONNECTIONS MUST BE FLUSHED IN ACCORDANCE WITH NFPA 24 AND A CONTRACTOR'S MATERIAL AND TEST CERTIFICATE FOR UNDERGROUND PIPING FORM MUST BE COMPLETED.

28. FIRE DEPARTMENT CONNECTS SHALL BE LOCATED ON THE STREET SIDE OF THE BUILDING PER NFPA 13.

29. BUILDING ADDRESSES SHALL BE ASSIGNED BY THE BUILDING OFFICIAL AT THE TIME OF ISSUANCE OF A BUILDING PERMIT.

30. THE SITE LAYOUT IS DESIGNED IN COMPLIANCE WITH APPLICABLE ACCESSIBILITY REGULATIONS. THE PROPOSED STRUCTURE WILL BE DESIGNED IN ACCORDANCE WITH APPLICABLE ACCESSIBILITY STANDARDS.

31. THE PROPOSED USE FOR THE SITE IS ONE BUILDING WITH SEPARATE OFFICES AND WAREHOUSE SPACES.

32. THE FOLLOWING FEDERAL AND STATE PERMITS WILL NEED TO BE ISSUED FOR THE SUBJECT PROPERTY:
A. ALTERATION OF TERRAIN PERMIT

33. NO VARIANCES OR SPECIAL EXCEPTIONS HAVE BEEN GRANTED AT THE TIME OF THIS PLAN SUBMISSION.

34. FOR MORE INFORMATION ABOUT THIS SITE PLAN CONTACT KENNETH WOOD, P.E. OF ATTAR ENGINEERING

35. NO SNOW REMOVAL SHALL OCCUR IN BUFFER ZONE.

36. FREESTANDING SIGN TO BE INSTALLED 10 FT FROM PROPERTY LINE. THE SIGN WILL HAVE AN OVERALL HEIGHT OF 20 FT FROM THE GROUND. THE SIGN DISPLAY WILL BE 5 FT HIGH BY 15 FT WIDE.

37. PROPOSED HOURS OF OPERATION ARE 8 A.M. – 5 P.M. MONDAY THRU FRIDAY. THE FACILITY CURRENTLY EMPLOYS 15 EMPLOYEES WITH A POTENTIAL OF UP TO 25 EMPLOYS

38. DAILY TRAFFIC – PCE'S (PASSENGER CAR EQUIVALENTS) ARE ESTIMATED AT 60 TRIPS/DAY ACCOUNTING FOR EMPLOYEES, CLIENTS, AND SHIPPING AND RECEIVING. A MAJORITY OF RECEIVING TRIPS ARE SMALL (FED EX AND UPS) DELIVERIES CONSISTING OF 4 PCE/DAY. LARGER DELIVERIES (WB-50) ARE ANTICIPATED AT ONE TRIP/MONTH. THE MAXIMUM (A.M.) PEAK IS AT 25 TRIPS/HOUR.

39. ROOF RUNOFF FROM THE PROPOSED 5,000 SQ. FT. OFFICE SPACE SHALL BE ROUTED THROUGH ROOFEDGE GUTTERS, WITH THE DOWNSPOUT FOR THE NORTHERN PITCH BEING ROUTED DIRECTLY INTO PROPOSED CB #4. SEE GRADING & UTILITY PLAN (SHEET 3).

RECEIVED
OCT 19 2020
By

INDEX OF SHEETS

1. OVERALL SITE PLAN
2. EROSION CONTROL PLAN
3. GRADING & UTILITY PLAN
4. BOUNDARY SURVEY & EXISTING CONDITIONS PLAN
5. SOILS MAP
6. LIGHTING PLAN
7. LANDSCAPING
8. TURN TEMPLATES
9. SITE DETAILS
10. SITE DETAILS
11. SITE DETAILS
12. SITE DETAILS
13. SITE DETAILS
14. SITE DETAILS

REFERENCES

1. BOUNDARY AND TOPOGRAPHIC WORKSHEET PROVIDED BY THADDEUS THORNE SURVEY, INC

STATE OF NEW HAMPSHIRE
KENNETH A. WOOD
No. 187
CERTIFIED WETLAND SCIENTIST

LEGEND

PROPERTY LINE	
SETBACK	
EXT. ABUTTER LINE	
PRP. RIGHT-OF-WAY	
EXT. PAVEMENT	
PRP. PAVEMENT	
PRP. BUILDING	
EXT. WETLAND BNDY	WETLAND
EXT. WETLAND AREA	

GRAPHIC SCALE
0 50 100 150 200 (FEET)

CITY DEPARTMENT REVIEWS

SIGNATURE	DATE
ROCHESTER POLICE DEPARTMENT	
ROCHESTER FIRE DEPARTMENT	
ROCHESTER PUBLIC WORKS DEPARTMENT	

THIS APPLICATION HAS BEEN REVIEWED BY THESE DEPARTMENTS, WHICH HAVE OFFERED COMMENTS TO THE PLANNING BOARD.

APPROVAL OF THE PLANNING BOARD OF ROCHESTER, NH

SIGNATURE	DATE
Shannon B Saunders CHAIR Director	10/19/20

Approved by PB May 4, 2020

THE SIGNATURE OF 3 OR MORE PLANNING BOARD MEMBERS INDICATES APPROVAL OF THIS PLAN

NO.	DESCRIPTION	DATE
D	CITY PLANNING BOARD REVISIONS	10/15/20
C	CITY ENGINEER REVISIONS	09/24/20
B	NHDES AOT PERMIT REVISIONS	08/07/20
A	TOWN COMPLETENESS REVISIONS	08/28/20

REVISIONS

TAX MAP 221, LOT 1

STATE OF NEW HAMPSHIRE
KENNETH A. WOOD
No. 9367
LICENSED
PROFESSIONAL ENGINEER

SITE PLAN– MANUFACTURING BUILDING
INTEC AUTOMATION
6 INDUSTRIAL WAY, ROCHESTER, NH

FOR: INTEC AUTOMATION INC.
PO BOX 1653
ROCHESTER NH, 03867

ATTAR ENGINEERING, INC.
CIVIL ◆ STRUCTURAL ◆ MARINE
1284 STATE ROAD – ELIOT, MAINE 03903
PHONE: (207)439-6023 FAX: (207)439-2128

SCALE: 1" = 50'	APPROVED BY:	DRAWN BY: MJS
DATE: 04/08/20		REVISION DATE: D : 10/15/20
JOB NO: C164-20	FILE: IRM BASE.DWG	SHEET: 1 OF 14

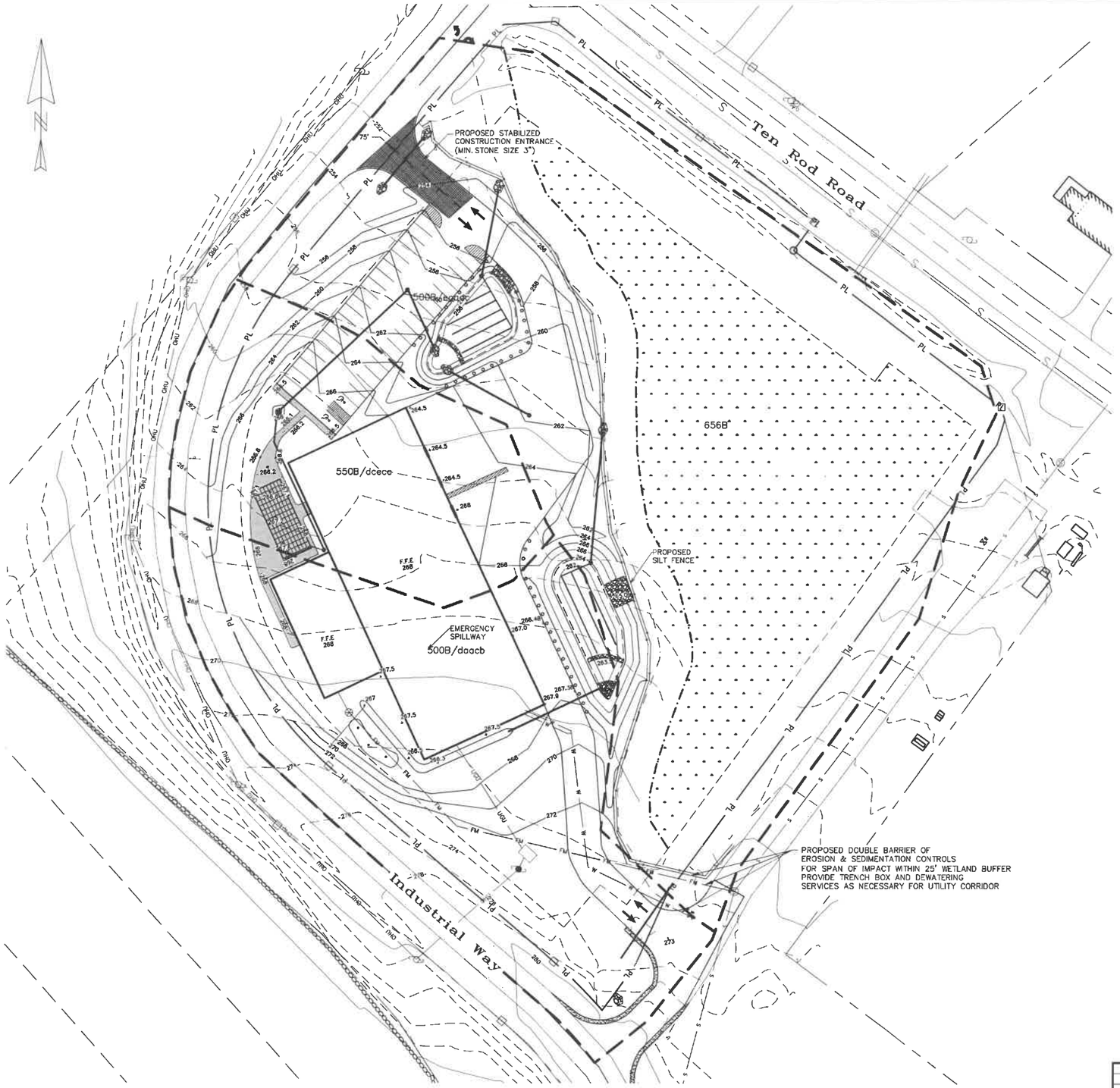

LEGEND

PROPERTY LINE	
SETBACK	
EXT. PAVEMENT	
PRP. PAVEMENT	
EXT. BUILDING	
PRP. BUILDING	
EXT. MAJOR CONTOUR	XXX
EXT. MINOR CONTOUR	XXX
PRP. MAJOR CONTOUR	XXX
PRP. MINOR CONTOUR	XXX
PRP. SPOT GRADE	102.0' X
EXT. TREELINE	
PRP. TREELINE	
PRP. STOCKADE FENCE	
EXT. CATCH BASIN	
EXT. STORM LINE	D D
PRP. CATCH BASIN	
PRP. STORM LINE	D D
SEWER MANHOLE	S
PRP. SEWER LINE	S S
PRP. GAS VALVE	
PRP. GAS MAIN	GAS
EXT. WATER HYDRANT	
EXT. WATER LINE	W W
PRP. WATER VALVE	
PRP. WATER LINE	W W
POWER POLE	EXT PRP
EXT. OVERHEAD ELEC	OHU
EXT. LIGHT POLE	
EXT. U.G. ELECTRIC	UGU
PRP. SILTATION FENCE	I I

GRAPHIC SCALE

0 40 80 120 160 (FEET)

TAX MAP 221, LOT 1

NO.	DESCRIPTION	DATE
B	CITY ENGINEER REVISIONS	09/24/20
A	NHDES AOT PERMIT REVISIONS	08/07/20

REVISIONS

STATE OF NEW HAMPSHIRE — BENJAMIN A. WOOD No. 18257 — LICENSED PROFESSIONAL ENGINEER

EROSION CONTROL PLAN
INTEC AUTOMATION
6 INDUSTRIAL WAY, ROCHESTER, NH

FOR: INTEC AUTOMATION INC.
PO BOX 1653
ROCHESTER NH, 03867

ATTAR ENGINEERING, INC.
CIVIL ◆ STRUCTURAL ◆ MARINE
1284 STATE ROAD – ELIOT, MAINE 03903
PHONE: (207)439-6023 FAX: (207)439-2128

SCALE: 1" = 40'	APPROVED BY:	DRAWN BY: MJS
DATE: 04/06/20		REVISION DATE: B : 09/24/20
JOB NO: C164-20	FILE: IRM BASE.DWG	SHEET: 2 OF 14

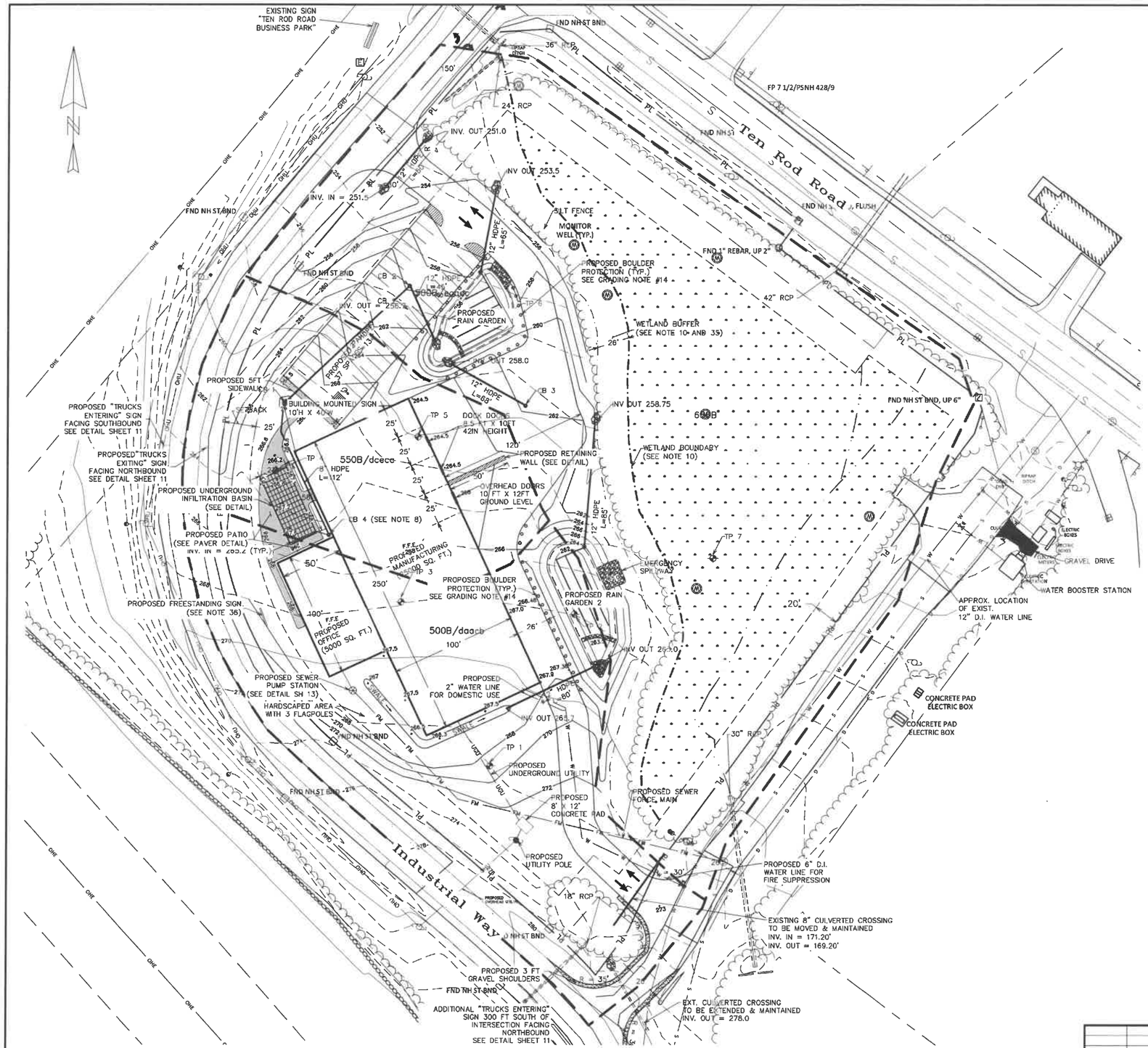

GRADING, DRAINAGE AND UTILITIES NOTES

1. ALL PIPES, VALVES, FITTINGS, AND CONNECTIONS SHALL MEET CURRENT ROCHESTER WATER DEPARTMENT STANDARDS.

2. ALL WATER SERVICES TO BE EQUIPPED WITH CURB STOPS.

3. ALL STORM DRAINS TO BE ADS N-12 (PE) OR APPROVED EQUAL.

4. A MINIMUM OF 5.0' OF COVER SHALL BE MAINTAINED OVER ALL WATER LINES.

5. THE ELECTRICAL POWER COMPANY WILL PREPARE THE ELECTRICAL PLAN FOR CONSTRUCTION. ALL ELECTRICAL, TELEPHONE, AND CABLE SERVICES WILL BE UNDERGROUND.

6. NEW WATER LINES SHALL BE TESTED IN ACCORDANCE WITH DISTRICT REQUIREMENTS.

7. ELECTRICAL SERVICE TO BE COORDINATED WITH EVERSOURCE.

8. NORTHWEST ROOF EGDES ADJACENT TO PATIO AREA TO BE GUTTERED. THE GUTTER OUTFALL SHALL FLOW INTO CATCH BASIN 4 (CB 4). CATCH BASIN 4 IS TO ACT AS AN OVERFLOW STRUCTURE FOR THE INFILTRATOR SYSTEM.

9. ALL WATER MAIN AND FITTING SHALL BE POLY-WRAPPED TO PREVENT DAMAGE FROM CORROSIVE SOILS.

10. ALL DOMESTIC AND FIRE WATER SERVICE LINES TO HAVE PERMITTED BACKFLOW PREVENTION DEVICES INSTALLED.

11. ROOF RUNOFF FROM THE PROPOSED 5,000 SQ. FT. OFFICE SPACE SHALL BE ROUTED THROUGH ROOFEDGE GUTTERS, WITH THE DOWNSPOUT FOR THE NORTHERN PITCH BEING ROUTED DIRECTLY INTO PROPOSED CB #4.

12. IN ACCORDANCE WITH THE NEW HAMPSHIRE STORMWATER MANUAL: VOLUME 2, CHAPTER 4 "DESIGNING BEST MANAGEMENT PRACTICES", RIP-RAP SIZING IS AS FOLLOWS:

$D_{50} = [0.02*Q^{1.3}]/[TW*D_0]$

WHERE: Q = PEAK DISCHARGE (CFS)
TW = TAILWATER ELEVATION (FEET)
D_0 = INSIDE DIAMETER OF OUTFALL (FEET)

BRC #1 OUTFALL:
$D_{50} = [0.02*(2.49)^{1.3}] / [(0.25)*(1.0)]$
$= [0.02*3.27] / [0.25]$
$= [0.065] / [0.25] = 0.262$ FEET => 3.13 INCHES

BRC #2 OUTFALL:
$D_{50} = [0.02*(3.07)^{1.3}] / [(0.25)*(1.0)]$
$= [0.02*4.30] / [0.25]$
$= [0.086] / [0.25] = 0.344$ FEET => 4.12 INCHES

13. MINIMUM VERTICAL SEPARATION BETWEEN PROPOSED FORCE MAIN AND OTHER PROPOSED UTILITY SERVICES SHALL BE 18 INCHES, WITH MAXIMUM ALLOWABLE DISTANCE BETWEEN SERVICE JOINTS. MINIMUM DEPTH OF COVER OF PROPOSED FORCE MAIN SHALL BE 5 FEET.

14. BOULDER BARRIERS ARE PROPOSED AROUND BOTH STORMWATER RAIN GARDENS 1 AND 2, FOR THE SPAN OF PERIMETER THAT ABUTS A PROPOSED IMPERVIOUS SURFACE. THESE BOULDERS ARE TO ACT AS A PREVENTATIVE MEASURE FOR PLOWING/STORAGE OF SNOW IN THE RAIN GARDENS. SEE DETAIL SHEET 11 FOR THE BOULDER BARRIER DETAIL.

DRAINAGE STRUCTURE SCHEDULE

CB 1 RIM ELEV. = 265.5 12" INV OUT = 261.0 8" INV IN (CB4) = 263.0	CB 2 RIM ELEV. = 259.8 12" INV IN (CB1) = 257.2 12" INV OUT = 257.0
CB 3 RIM ELEV. = 261.8 12" INV OUT = 259.0	CB 4 RIM ELEV. = 267.9 4" INV OUT = 265.4 8" INV OUT = 265.6

LEGEND

PROPERTY LINE	
SETBACK	
EXT. PAVEMENT	
PRP. PAVEMENT	
EXT. BUILDING	
PRP. BUILDING	
EXT. MAJOR CONTOUR	XXX
EXT. MINOR CONTOUR	XXX
PRP. MAJOR CONTOUR	XXX
PRP. MINOR CONTOUR	XXX
PRP. SPOT GRADE	102.0' x
EXT. TREELINE	
PRP. TREELINE	
PRP. STOCKADE FENCE	
EXT. CATCH BASIN	
EXT. STORM LINE	D D
PRP. CATCH BASIN	
PRP. STORM LINE	D D
SEWER MANHOLE	S
PRP. SEWER LINE	S S
PRP. GAS VALVE	
PRP. GAS MAIN	GAS
EXT. WATER HYDRANT	
EXT. WATER LINE	W W
PRP. WATER VALVE	
PRP. WATER LINE	W W
POWER POLE	EXT PRP
EXT. OVERHEAD ELEC	OHU
EXT. LIGHT POLE	
EXT. U.G. ELECTRIC	UGU
PRP. SILTATION FENCE	x x

GRAPHIC SCALE
0 40 80 120 160 (FEET)

TAX MAP 221, LOT 1

NO.	DESCRIPTION	DATE
D	CITY PLANNING BOARD REVISIONS	10/15/20
C	CITY ENGINEER REVISIONS	09/24/20
B	NHDES AOT PERMIT REVISIONS	08/07/20
A	TOWN COMPLETENESS REVISIONS	06/26/20

REVISIONS

STATE OF NEW HAMPSHIRE — KENNETH A. WOOD No. 8972 — LICENSED PROFESSIONAL ENGINEER

GRADING AND UTILITIES PLAN
INTEC AUTOMATION
6 INDUSTRIAL WAY, ROCHESTER, NH

FOR: INTEC AUTOMATION INC.
PO BOX 1653
ROCHESTER NH, 03867

ATTAR ENGINEERING, INC.
CIVIL ◆ STRUCTURAL ◆ MARINE
1284 STATE ROAD – ELIOT, MAINE 03903
PHONE: (207)439-6023 FAX: (207)439-2128

SCALE: 1" = 40'	APPROVED BY:	DRAWN BY: MJS
DATE: 04/06/20		REVISION DATE: D : 10/15/20
JOB NO: C164-20	FILE: IRM BASE.DWG	SHEET: 3 OF 14

Vicinity Sketch

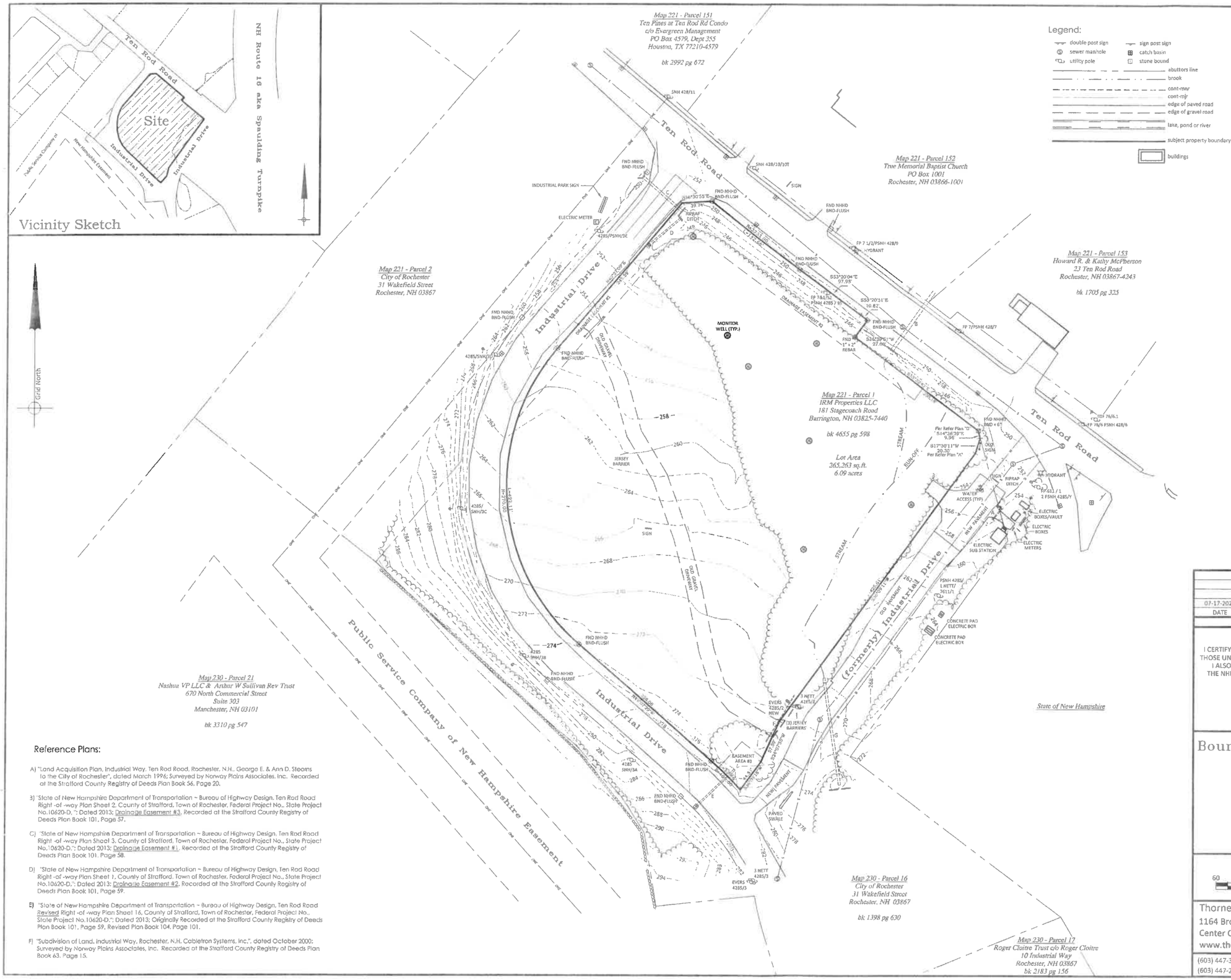

Notes:

1) Traverses performed with EDM/Theodolite- 20 October 2019
Error of closure - 1/54860

2) Owner of Record: Tax Map 221 Lot 1
IRM Properties, LLC
181 Stagecoach Street
Barrington, NH 03825-7440
Deed Reference - Strafford County Registry of Deeds Book 4655, Page 598

3) Tax Map 221, Lot 1 is subject to three (3) drainage easements to benefit the State of New Hampshire as shown on this plan. For the description see Deed Book 3887, Page 715 for further description.

4) The bearings shown herein refer to the New Hampshire Coordinate System. Grid North, the vertical datum is the North American Vertical Datum of 1988 (NAVD88). The contours are 2 foot interval.

CULVERT LETTER	CULVERT SIZE	INVERT IN	INVERT OUT	CULVERT TYPE
A	15"	254.12'	252.84'	UNKNOWN
B	48"	243.65'	243.13'	CONCRETE
C	36"	245.32'	244.80'	CONCRETE
D	24"	C.BASIN	245.36'	UNKNOWN
E	24"	C.BASIN	274.21'	CONCRETE
F	8"	UNKNOWN	268.55'	PLASTIC
G	36"	269.04'	265.08'	CONCRETE

Reference Plans:

A) "Land Acquisition Plan, Industrial Way, Ten Rod Road, Rochester, N.H., George E. & Ann D. Stearns to the City of Rochester", dated March 1996; Surveyed by Norway Plains Associates, Inc. Recorded at the Strafford County Registry of Deeds Plan Book 56, Page 20.

B) "State of New Hampshire Department of Transportation ~ Bureau of Highway Design, Ten Rod Road Right -of -way Plan Sheet 2, County of Strafford, Town of Rochester, Federal Project No., State Project No.10620-D,"; Dated 2013; Drainage Easement #3, Recorded at the Strafford County Registry of Deeds Plan Book 101, Page 57.

C) "State of New Hampshire Department of Transportation ~ Bureau of Highway Design, Ten Rod Road Right -of -way Plan Sheet 3, County of Strafford, Town of Rochester, Federal Project No., State Project No.10620-D,"; Dated 2013; Drainage Easement #1, Recorded at the Strafford County Registry of Deeds Plan Book 101, Page 58.

D) "State of New Hampshire Department of Transportation ~ Bureau of Highway Design, Ten Rod Road Right -of -way Plan Sheet 1, County of Strafford, Town of Rochester, Federal Project No., State Project No.10620-D,"; Dated 2013; Drainage Easement #2, Recorded at the Strafford County Registry of Deeds Plan Book 101, Page 59.

E) "State of New Hampshire Department of Transportation ~ Bureau of Highway Design, Ten Rod Road Revised Right -of -way Plan Sheet 16, County of Strafford, Town of Rochester, Federal Project No., State Project No.10620-D,"; Dated 2013; Originally Recorded at the Strafford County Registry of Deeds Plan Book 101, Page 59, Revised Plan Book 104, Page 101.

F) "Subdivision of Land, Industrial Way, Rochester, N.H. Cabletron Systems, Inc.", dated October 2000; Surveyed by Norway Plains Associates, Inc. Recorded at the Strafford County Registry of Deeds Plan Book 63, Page 15.

DATE	DESCRIPTION	BY
07-17-2020	REVISED NORTH ARROWN AND NOTE 4	WS/ LG

*** REVISIONS ***

CERTIFICATION

I CERTIFY THAT THIS PLAT WAS PREPARED BY ME OR BY THOSE UNDER MY DIRECT AND IMMEDIATE SUPERVISION. I ALSO CERTIFY THAT THIS SURVEY CONFORMS TO THE NHLSA MINIMUM STANDARDS OF PRACTICE FOR THE SURVEY OF REAL PROPERTY.

July 17, 2020
DATE

LORAINE GERARD No. 663

Boundary Survey and Existing Conditions of Land of IRM Properties, LLC

Tax Map 221 - Parcel 1

Industrial Way
Rochester, Strafford County
New Hampshire

Scale: 1" = 60'
60 30 0 60 120

SURVEYED BY: TH, MM, LLG	DATE: 10-29-19
DRAWN BY: WS LLG	DATE: 11-12-19 01-27-20
CHECKED BY: LLG	DATE: 01-29-20

Thorne Associates
1164 Brownfield Road
Center Conway, NH 03813
www.thornellc.com

THORNE ASSOCIATES

(603) 447-3320 fax
(603) 447-2254 phone
email: info@thornellc.com

DWG. NO. 20-05

TEST PIT #1 (EL = 269.0')

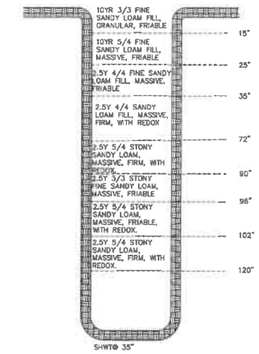

SOIL TEST PIT PROFILE
(NTS)

TEST PIT #2 (EL = 267.5')

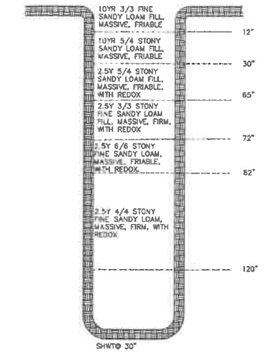

SOIL TEST PIT PROFILE
(NTS)

TEST PIT #3 (EL = 267.5')

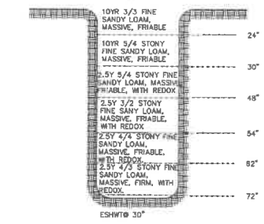

SOIL TEST PIT PROFILE
(NTS)

TEST PIT #4 (EL = 263.5')

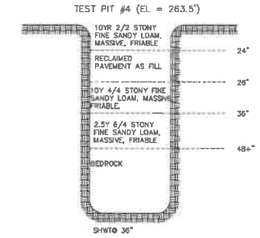

SOIL TEST PIT PROFILE
(NTS)

TEST PIT #5 (EL = 259.5')

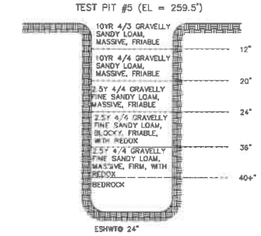

SOIL TEST PIT PROFILE
(NTS)

TEST PIT #6 (EL = 255.5')

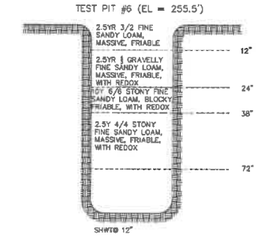

SOIL TEST PIT PROFILE
(NTS)

TEST PIT #7 (EL = 262')

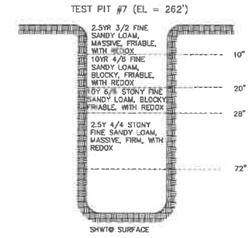

SOIL TEST PIT PROFILE
(NTS)

SOILS NOTES

1. THIS MAP PRODUCT IS WITHIN THE TECHNICAL STANDARDS OF THE NATIONAL COOPERATIVE SOIL SURVEY. IT WAS PRODUCED BY A CERTIFIED SOIL SCIENTIST, AND IS NOT A PRODUCT OF THE USDA NATURAL RESOURCES CONSERVATION SERVICE. THERE IS A NARRATIVE REPORT THAT ACCOMPANIES THIS MAP.
2. THE DETAILED SITE SPECIFIC SOIL MAP CONFORMS TO THE STANDARDS OF SSSNNE PUBLICATION NO. 2, AS AMENDED "SITE-SPECIFIC SOIL MAPPING STANDARDS FOR NH & VT"
3. SITE SPECIFIC SOIL SURVEY WAS COMPLETED BY MICHAEL CUOMO, CSS ON 3/27/20

SOILS LEGEND

NUMERICAL SYMBOL	SOIL SERIES NAME	HSG
500	UDORTHENTS, LOAMY (MOD. WELL DRAINED)	B
550	UDORTHENTS, BEDROCK SUBSTRATUM	C
500	UDORTHENTS, LOAMY (SOMEWHAT POORLY DRAINED)	C
656	RIDGEBURY	C

ALPHA SLOPE LEGEND	RANGE
B	1-8%

LEGEND

- PROPERTY LINE
- SETBACK
- EXT. ABUTTER LINE
- PRP. RIGHT-OF-WAY
- EXT. PAVEMENT
- PRP. PAVEMENT
- PRP. BUILDING
- EXT. WETLAND BNDY
- EXT. WETLAND AREA

GRAPHIC SCALE

0 50 100 150 200 (FEET)

TAX MAP 221, LOT 1

NO.	DESCRIPTION	DATE
A	NHDES AOT PERMIT REVISIONS	08/07/20

REVISIONS

STATE OF NEW HAMPSHIRE
KENNETH A. WOOD No. 8917 LICENSED PROFESSIONAL ENGINEER

EXISTING CONDITIONS/SITE SPECIFIC SOIL SURVEY
INTEC AUTOMATION
6 INDUSTRIAL WAY, ROCHESTER, NH

FOR: INTEC AUTOMATION INC.
PO BOX 1653
ROCHESTER NH, 03867

ATTAR ENGINEERING, INC.
CIVIL ◆ STRUCTURAL ◆ MARINE
1284 STATE ROAD – ELIOT, MAINE 03903
PHONE: (207)439-6023 FAX: (207)439-2128

SCALE: 1" = 50'	APPROVED BY:	DRAWN BY: MJS
DATE: 04/06/20		REVISION DATE: A : 08/07/20
JOB NO: C164-20	FILE: IRM BASE.DWG	SHEET: 5 OF 14

TYPE PRV PREVAIL

TYPE GWC

StatArea_1
MAIN PARKING LOT
Illuminance (Fc)
Average = 1.76
Maximum = 3.6
Minimum = 1.0
Avg/Min Ratio = 1.76
Max/Min Ratio = 3.60

StatArea_2
DOCK AREA
Illuminance (Fc)
Average = 2.14
Maximum = 3.9
Minimum = 0.7
Avg/Min Ratio = 3.06
Max/Min Ratio = 5.57

Luminaire Schedule

Symbol	Qty	Label	Arrangement	Description
	2	S3	SINGLE	GLEON-AF-01-LED-E1-T3/ SSS4A20SFN1 (20' AFG)
	4	S4	SINGLE	GLEON-AF-02-LED-E1-SL4-HSS/ SSS4A20SFN1 (20' AFG)
	5	S3-HS	SINGLE	GLEON-AF-01-LED-E1-SL3-HSS/ SSS4A20SFN1 (20' AFG)
	5	W	SINGLE	IST-AF-450-LED-E1-T4FF/ WALL MTD 18' AFG
	1	W1	SINGLE	IST-AF-450-LED-E1-SL3/ WALL MTD 18' AFG
	2	W2	SINGLE	IST-AF-350-LED-E1-T4FF/ WALL MTD 9' AFG
	3	W3	SINGLE	IST-AF-350-LED-E1-SL3/ WALL MTD 9' AFG

LEGEND

PROPERTY LINE	
SETBACK	
EXT. ABUTTER LINE	
PRP. RIGHT-OF-WAY	
EXT. PAVEMENT	
PRP. PAVEMENT	
PRP. BUILDING	
EXT. WETLAND BNDY	UPLAND WETLAND
EXT. WETLAND AREA	

GRAPHIC SCALE

0 40 80 120 160 (FEET)

TAX MAP 221, LOT 1

NO.	DESCRIPTION	DATE
	REVISIONS	

LIGHTING PLAN
INTEC AUTOMATION
6 INDUSTRIAL WAY, ROCHESTER, NH

FOR: INTEC AUTOMATION INC.
PO BOX 1653
ROCHESTER NH, 03867

ATTAR ENGINEERING, INC.
CIVIL ◆ STRUCTURAL ◆ MARINE
1284 STATE ROAD – ELIOT, MAINE 03903
PHONE: (207)439-8023 FAX: (207)439-2128

SCALE: 1" = 40'	APPROVED BY:	DRAWN BY: MJS
DATE: 04/06/20		REVISION DATE: - : -
JOB NO: C164-20	FILE: IRM BASE.DWG	SHEET: 6 OF 14

LANDSCAPING NOTES

1) THE CONTRACTOR SHAL FOLLOW BEST MANAGEMENT PRACTICES DURING CONSTRUCTION AND SHALL TAKE ALL MEANS NECESSARY TO STABILIZE AND PROTECT THE SITE FROM EROSION.

2) EROSION CONTROL SHALL BE IN PLACE PRIOR TO CONSTRUCTION.

3) EROSION CONTROL TO CONSIST OF HAY BALES AND EROSION CONTROL FABRIC SHALL BE STAKED IN PLACE BETWEEN THE WORK AND WATER BODIES, WETLANDS AND/OR DRAINAGE WAYS PRIOR TO ANY CONSTRUCTION.

4) THE CONTRACTOR SHALL VERIFY LAYOUT AND GRADES AND INFORM THE LANDSCAPE ARCHITECT OR CLIENT'S REPRESENTATIVE OF ANY DISCREPANCIES OR CHANGES IN LAYOUT AND/OR GRADE RELATIONSHIPS PRIOR TO CONSTRUCTION.

5) THE CONTRACTOR SHALL VERIFY EXACT LOCATION AND ELEVATION OF ALL UTILITIES WITH RESPECTIVE UTILITY OWNERS PRIOR TO CONSTRUCTION. CALL DIGSAFE AT 1-888-344-7233.

6) THE CONTRACTOR SHALL GUARANTEE ALL PLANTS FOR NOT LESS THAN ONE YEARS FROM THE TIME OF ACCEPTANCE.

7) ALL LANDSCAPING SHALL BE PROVIDED WITH EITHER OF THE FOLLOWING:

7)1) AN UNDERGROUND SPRINKLER SYSTEM

7)2) AN OUTSIDE HOSE ATTACHMENT WITHIN 150 FEET

8) TREES, GROUND COVER, AND SHRUB BEDS SHALL BE MULCHED TO A DEPTH OF 2" WITH ONE-YEAR-OLD, WELL-COMPOSTED, SHREDDED NATIVE BARK NOT LONGER THAN 4" IN LENGTH AND 1/2" IN WIDTH, FREE OF WOODCHIPS AND SAW DUST. MULCH FOR FERNS AND HERBACEOUS PERENNIALS SHALL BE NO LONGER THAN 1" IN LENGTH. TREES IN LAWN AREAS SHALL BE MULCHED IN A 5' DIAMETER MIN. SAUCER.

9) ALL DISTURBED AREAS WILL BE DRESSED WITH 4" OF TOPSOIL AND PLANTED AS NOTED ON THE PLANS OR SEEDED EXCEPT PLANT BEDS. PLANT BEDS SHALL BE PREPARED TO A DEPTH OF 12" WITH 75% LOAM AND 25% COMPOST.

PLANT LIST

TREES

SMYBOL	BOTANICAL NAME	COMMON NAME	QUANTITY	SIZE
AS	ACER SACCHARUM 'BONFIRE'	BONFIRE SUGAR MAPLE	1	2.5-3" CAL
SFT	SMALL FLOWERING TREE		6	2.5-3" CAL

LEGEND

PROPERTY LINE	
SETBACK	
EXT. ABUTTER LINE	
PRP. RIGHT-OF-WAY	
EXT. PAVEMENT	
PRP. PAVEMENT	
PRP. BUILDING	
EXT. WETLAND BNDY	WETLAND
EXT. WETLAND AREA	

GRAPHIC SCALE

0 40 80 120 160 (FEET)

TAX MAP 221, LOT 1

NO.	DESCRIPTION	DATE
	REVISIONS	

STATE OF NEW HAMPSHIRE
KENNETH A. WOOD
No. 11017
LICENSED
PROFESSIONAL ENGINEER

LANDSCAPING PLAN
INTEC AUTOMATION
6 INDUSTRIAL WAY, ROCHESTER, NH

FOR: INTEC AUTOMATION INC.
PO BOX 1653
ROCHESTER NH, 03867

ATTAR ENGINEERING, INC.
CIVIL ◆ STRUCTURAL ◆ MARINE
1284 STATE ROAD – ELIOT, MAINE 03903
PHONE: (207)439-6023 FAX: (207)439-2128

SCALE: 1" = 40'	APPROVED BY:	DRAWN BY: MJS
DATE: 04/06/20		REVISION DATE: - : -
JOB NO: C164-20	FILE: IRM BASE.DWG	SHEET: 7 OF 14

500B/eabcc

550B/dcecc

656B

500B/daacb

TAX MAP 221, LOT 1

GRAPHIC SCALE

0 40 80 120 160 (FEET)

NO.	DESCRIPTION	DATE
	REVISIONS	

STATE OF NEW HAMPSHIRE
KENNETH A. WOOD No. 8897
LICENSED PROFESSIONAL ENGINEER

WB-50 TURN TEMPLATE
INTEC AUTOMATION
6 INDUSTRIAL WAY, ROCHESTER, NH

FOR: INTEC AUTOMATION INC.
PO BOX 1653
ROCHESTER NH, 03867

ATTAR ENGINEERING, INC.
CIVIL ◆ STRUCTURAL ◆ MARINE
1284 STATE ROAD – ELIOT, MAINE 03903
PHONE: (207)439-6023 FAX: (207)439-2128

SCALE: 1" = 40'	APPROVED BY:	DRAWN BY: MJS
DATE: 04/06/20		REVISION DATE: – : –
JOB NO: C164-20	FILE: IRM BASE.DWG	SHEET: 8 OF 14

LEGEND

PROPERTY LINE	
SETBACK	
EXT. ABUTTER LINE	
PRP. RIGHT-OF-WAY	
EXT. PAVEMENT	
PRP. PAVEMENT	
PRP. BUILDING	
EXT. WETLAND BNDY	
EXT. WETLAND AREA	

EROSION & SEDIMENTATION CONTROL NOTES

1. SILTATION FENCE OR HAY BALE BARRIERS WILL BE INSTALLED DOWNSLOPE OF ALL STRIPPING OR CONSTRUCTION OPERATIONS. A DOUBLE SILT FENCE BARRIER SHALL BE INSTALLED DOWNSLOPE OF ANY SOIL MATERIAL STOCKPILES. SILT FENCES SHALL BE INSPECTED AFTER EACH RAIN EVENT AND DAILY DURING PROLONGED RAIN. SILT AND SOIL PARTICLES ACCUMULATING BEHIND THE FENCE SHALL BE REMOVED AFTER EACH SIGNIFICANT RAIN EVENT AND IN NO INSTANCE SHOULD ACCUMULATION EXCEED 1/2 THE HEIGHT OF THE FENCE. TORN OR DAMAGED AREAS SHALL BE REPAIRED.

2. TEMPORARY AND PERMANENT VEGETATION AND MULCHING IS AN INTEGRAL COMPONENT OF THE EROSION AND SEDIMENTATION CONTROL PLAN. ALL AREAS SHALL BE INSPECTED AND MAINTAINED UNTIL THE DESIRED VEGETATIVE COVER IS ESTABLISHED. THESE CONTROL MEASURES ARE ESSENTIAL TO EROSION PREVENTION AND ALSO REDUCE COSTLY REWORK OF GRADED AND SHAPED AREAS.

3. SEEDING, FERTILIZER AND LIME RATES AND TIME OF APPLICATION WILL BE DEPENDENT ON SOIL REQUIREMENTS. TEMPORARY VEGETATION SHALL BE MAINTAINED IN THESE AREAS UNTIL PERMANENT SEEDING IS APPLIED. ADDITIONALLY, EROSION AND SEDIMENTATION MEASURES SHALL BE MAINTAINED UNTIL PERMANENT VEGETATION IS ESTABLISHED.

4. ALL LAWN AREA, OUTER POND SIDE SLOPES AND SWALES SHALL BE PERMANENTLY SEEDED WITH THE FOLLOWING MIXTURE: 20 LB/ACRE CREEPING RED FESCUE, 2 LB/ACRE REDTOP AND 20 LB/ACRE TALL FESCUE FOR A TOTAL OF 42 LB/ACRE. FERTILIZER AND LIME RATES SHALL BE DEPENDENT ON SOIL TESTING. IN THE ABSENCE OF SOIL TESTS, FERTILIZE WITH 10-20-20 (N-P205-K201) AT 800 LB/ACRE AND LIME AT 3 TONS/ACRE. MULCH WITH HAY AT 70-90 LB/1000 S.F. 4" OF LOAM SHALL BE APPLIED PRIOR TO SEEDING.

5. POND BOTTOMS AND INNER POND SIDESLOPES SHALL BE PERMANENTLY SEEDED WITH THE FOLLOWING MIXTURE: 20 LB/ACRE CREEPING RED FESCUE, 8 LB/ACRE BIRDSFOOT TREFOIL AND 20 LB/ACRE TALL FESCUE FOR A TOTAL OF 48 LB/ACRE. SEE THE ABOVE NOTE FOR FERTILIZER, LIME AND MULCHING RATES.

6. TEMPORARY VEGETATION OF ALL DISTURBED AREAS, MATERIAL STOCKPILES AND OTHER SUCH AREAS SHALL BE ESTABLISHED BY SEEDING WITH EITHER WINTER RYE AT A RATE OF 112 LB/ACRE OR ANNUAL RYEGRASS AT A RATE OF 40 LB/ACRE. WINTER RYE SHALL BE USED FOR FALL SEEDING AND ANNUAL RYEGRASS FOR SHORT DURATION SEEDING. SEEDING SHALL BE ACCOMPLISHED BEFORE OCTOBER 1.

7. TEMPORARY SEEDING OF DISTURBED AREAS SHALL BE ACCOMPLISHED BEFORE OCTOBER 1. PERMANENT SEEDING SHALL BE ACCOMPLISHED BEFORE SEPTEMBER 15.

8. ALL SEEDED AREAS SHALL BE MULCHED WITH HAY AT A RATE OF 2 BALES (70-90 LB) PER 1000 S.F. OF SEEDED AREA.

9. SLOPES 2:1 OR STEEPER SHALL BE TREATED WITH POLYJUTE OPEN WEAVE GEOTEXTILE (OR EQUIVALENT) AFTER SEEDING. JUTE MATS SHALL BE ANCHORED PER MANUFACTURER'S SPECIFICATIONS.

10. EXCESSIVE DUST CAUSED BY CONSTRUCTION OPERATIONS SHALL BE CONTROLLED BY APPLICATION OF WATER OR CALCIUM CHLORIDE.

11. THE CONTRACTOR MAY OPT TO USE EROSION CONTROL MIX BERM AS A SEDIMENT BARRIER IN LIEU OF SILTATION FENCE OR HAY BALE BARRIERS WITH APPROVAL FROM THE INSPECTING ENGINEER.

12. MINIMIZE DISTURBED AREAS AND PROTECT NATURAL DOWNGRADIENT BUFFER AREAS TO THE EXTENT PRACTICABLE. CONTROL STORMWATER VOLUME AND VELOCITY WITHIN THE SITE TO MINIMIZE SOIL EROSION. MINIMIZE THE DISTURBANCE OF STEEP SLOPES. CONTROL STORMWATER DISCHARGES, INCLUDING BOTH PEAK FLOW RATES AND VOLUME, TO MINIMIZE EROSION AT OUTLETS. THE DISCHARGE MAY NOT RESULT IN EROSION OF ANY OPEN DRAINAGE CHANNELS, SWALES, STREAM CHANNELS OR STREAM BANKS, UPLAND, OR COASTAL OR FRESHWATER WETLANDS OFF THE PROJECT SITE.

13. THE PROJECT IS TO BE MANAGED IN A MANNER THAT MEETS THE REQUIREMENTS AND INTENT OF RSA 430:53 AND CHAPTER AGR 3800 RELATIVE TO INVASIVE SPECIES.

14. PERIMETER CONTROLS SHALL BE INSTALLED PRIOR TO EARTH MOVING OPERATIONS.

15. TEMPORARY WATER DIVERSION MUST BE USED AS NECESSARY UNTIL AREAS ARE STABILIZED. AN AREA SHALL BE CONSIDERED STABLE IF ONE OF THE FOLLOWING HAS OCCURRED: BASE COURSE GRAVELS HAVE BEEN INSTALLED IN AREAS NEEDED TO BE PAVED; A MINIMUM OF 85 PERCENT VEGETATED GROWTH HAS BEEN ESTABLISHED; A MINIMUM OF 3 INCHES OF NON-EROSIVE MATERIAL (SUCH AS STONE OR RIPRAP) HAS BEEN INSTALLED; EROSION CONTROL BLANKETS HAVE BEEN PROPERLY INSTALLED.

EROSION & SED. CONTROL NOTES (CONT.)

16. PRIOR TO CONSTRUCTION, PROPERLY INSTALL SEDIMENT BARRIERS AT THE DOWNGRADIENT EDGE OF ANY AREA TO BE DISTURBED AND ADJACENT TO ANY DRAINAGE CHANNELS WITHIN THE DISTURBED AREA. SEDIMENT BARRIERS SHOULD BE INSTALLED DOWNGRADIENT OF SOIL OR SEDIMENT STOCKPILES AND STORMWATER PREVENTED FROM RUNNING ONTO THE STOCKPILE. MAINTAIN THE SEDIMENT BARRIERS BY REMOVING ACCUMULATED SEDIMENT, OR REMOVING AND REPLACING THE BARRIER, UNTIL THE DISTURBED AREA IS PERMANENTLY STABILIZED. WHERE A DISCHARGE TO A STORM DRAIN INLET OCCURS, IF THE STORM DRAIN CARRIES WATER DIRECTLY TO A SURFACE WATER AND YOU HAVE AUTHORITY TO ACCESS THE STORM DRAIN INLET, YOU MUST INSTALL AND MAINTAIN PROTECTION MEASURES THAT REMOVE SEDIMENT FROM THE DISCHARGE.

17. WHENEVER PRACTICABLE, NO DISTURBANCE ACTIVITIES SHOULD TAKE PLACE WITHIN 50 FEET OF ANY PROTECTED NATURAL RESOURCE. IF DISTURBANCE ACTIVITIES TAKE PLACE BETWEEN 30 FEET AND 50 FEET OF ANY PROTECTED NATURAL RESOURCE, AND STORMWATER DISCHARGES THROUGH THE DISTURBED AREAS TOWARD THE PROTECTED NATURAL RESOURCE, PERIMETER EROSION CONTROLS MUST BE DOUBLED. IF DISTURBANCE ACTIVITIES TAKE PLACE LESS THAN 30 FEET FROM ANY PROTECTED NATURAL RESOURCE, AND STORMWATER DISCHARGES THROUGH THE DISTURBED AREAS TOWARD THE PROTECTED NATURAL RESOURCE, PERIMETER EROSION CONTROLS MUST BE DOUBLED AND DISTURBED AREAS MUST BE TEMPORARILY OR PERMANENTLY STABILIZED WITHIN 7 DAYS.

18. PRIOR TO CONSTRUCTION, PROPERLY INSTALL A STABILIZED CONSTRUCTION ENTRANCE (SCE) AT ALL POINTS OF EGRESS FROM THE SITE. THE SCE IS A STABILIZED PAD OF AGGREGATE, UNDERLAIN BY A GEOTEXTILE FILTER FABRIC, USED TO PREVENT TRAFFIC FROM TRACKING MATERIAL AWAY FROM THE SITE ONTO PUBLIC ROW'S. MAINTAIN THE SCE UNTIL ALL DISTURBED AREAS ARE STABILIZED.

19. WITHIN 7 DAYS OF THE CESSATION OF CONSTRUCTION ACTIVITIES IN AN AREA THAT WILL NOT BE WORKED FOR MORE THAN 7 DAYS, STABILIZE ANY EXPOSED SOIL WITH MULCH, OR OTHER NON-ERODIBLE COVER. STABILIZE AREAS WITHIN 75 FEET OF A WETLAND OR WATERBODY WITHIN 48 HOURS OF THE INITIAL DISTURBANCE OF THE SOIL OR PRIOR TO ANY STORM EVENT, WHICHEVER COMES FIRST.

20. REMOVE ANY TEMPORARY CONTROL MEASURES, SUCH AS SILTATION FENCE, WITHIN 30 DAYS AFTER PERMANENT STABILIZATION IS ATTAINED. REMOVE ANY ACCUMULATED SEDIMENTS AND STABILIZE.

21. IF THE AREA WILL NOT BE WORKED FOR MORE THAN ONE YEAR OR HAS BEEN BROUGHT TO FINAL GRADE, THEN PERMANENTLY STABILIZE THE AREA WITHIN 7 DAYS BY PLANTING VEGETATION, SEEDING, SOD, OR THROUGH THE USE OF PERMANENT MULCH, OR RIPRAP, OR ROAD SUB-BASE. IF USING VEGETATION FOR STABILIZATION, SELECT THE PROPER VEGETATION FOR THE LIGHT, MOISTURE, AND SOIL CONDITIONS; AMEND AREAS OF DISTURBED SUBSOILS WITH TOPSOIL, COMPOST, OR FERTILIZERS; PROTECT SEEDED AREAS WITH MULCH OR, IF NECESSARY, EROSION CONTROL BLANKETS; AND SCHEDULE SODDING, PLANTING, AND SEEDING SO TO AVOID DIE-OFF FROM SUMMER DROUGHT AND FALL FROSTS. NEWLY SEEDED OR SODDED AREAS MUST BE PROTECTED FROM VEHICLE TRAFFIC, EXCESSIVE PEDESTRIAN TRAFFIC, AND CONCENTRATED RUNOFF UNTIL THE VEGETATION IS WELL-ESTABLISHED WITH 90% COVER BY HEALTHY VEGETATION. IF NECESSARY, AREAS MUST BE REWORKED AND RESTABILIZED IF GERMINATION IS SPARSE, PLANT COVERAGE IS SPOTTY, OR TOPSOIL EROSION IS EVIDENT. ONE OR MORE OF THE FOLLOWING MAY APPLY TO A PARTICULAR SITE.

22. FOR SEEDED AREAS, PERMANENT STABILIZATION MEANS A 90% COVER OF THE DISTURBED AREA WITH MATURE, HEALTHY PLANTS WITH NO EVIDENCE OF WASHING OR RILLING OF THE TOPSOIL.

23. FOR SODDED AREAS, PERMANENT STABILIZATION MEANS THE COMPLETE BINDING OF THE SOD ROOTS INTO THE UNDERLYING SOIL WITH NO SLUMPING OF THE SOD OR DIE-OFF.

24. FOR MULCHED AREAS, PERMANENT MULCHING MEANS TOTAL COVERAGE OF THE EXPOSED AREA WITH AN APPROVED MULCH MATERIAL. EROSION CONTROL MIX MAY BE USED AS MULCH FOR PERMANENT STABILIZATION ACCORDING TO THE APPROVED APPLICATION RATES AND LIMITATIONS.

25. THE CONTRACTOR SHALL BE RESPONSIBLE FOR ADEQUATE HOUSEKEEPING PRACTICES DURING THE CONSTRUCTION OF THE PROJECT. THESE CAN BE FOUND IN THE FOLLOWING DOCUMENT: MDEP CHAPTER 500 (STORMWATER MANAGEMENT), APPENDIX C. HOUSEKEEPING. HOUSEKEEPING PRACTICES INCLUDE, BUT ARE NOT LIMITED TO, SPILL PREVENTION, GROUNDWATER PROTECTION, FUGITIVE SEDIMENT AND DUST, DEBRIS AND OTHER MATERIALS, EXCAVATION DEWATERING, AUTHORIZED NON-STORMWATER DISCHARGES AND UNAUTHORIZED NON-STORMWATER DISCHARGES.

26. TEMPORARY WATER DIVERSION MUST BE USED AS NECESSARY UNTIL AREAS ARE STABILIZED. PONDS AND SWALES SHALL BE INSTALLED EARLY ON IN THE CONSTRUCTION SEQUENCE.

27. STORMWATER PONDS, INFILTRATION BASINS, DITCHES AND SWALES MUST BE STABILIZED PRIOR TO DIRECTING RUNOFF TO THEM.

28. ROADWAYS AND PARKING LOTS SHALL BE STABILIZED WITHIN 72 HOURS OF ACHIEVING FINISHED GRADE.

29. CUT AND FILL SLOPES SHALL BE SEEDED/ LOAMED WITHIN 72 HOURS OF ACHIEVING FINISHED GRADE.

EROSION & SED. CONTROL NOTES (CONT.)

30. THE SMALLEST PRACTICAL AREA SHALL BE DISTURBED DURING CONSTRUCTION, BUT IN NO CASE SHALL EXCEED 5 ACRES AT ANY ONE TIME BEFORE DISTURBED AREAS ARE STABILIZED.

31. ALL AREAS SHALL BE STABILIZED WITHIN 45 DAYS OF INITIAL DISTURBANCE. LIMIT THE LENGTH OF EXPOSURE OF STABILIZED SOIL TO 45 DAYS OR LESS.

32. STORMWATER PONDS, INFILTRATION BASINS, AND SWALES MUST BE INSTALLED BEFORE GRADING THE SITE.

33. RUNOFF MUST BE DIRECTED TO TEMPORARY PRACTICES UNTIL STORMWATER BMPS ARE STABILIZED.

34. DEFINITION OF STABILIZED: IN AREAS TO BE PAVED, BASE COURSE GRAVELS MEETING THE REQUIREMENTS OF NHDOT STANDARD FOR ROAD AND BRIDGE CONSTRUCTION, 2016, ITEM 304.2 HAVE BEEN INSTALLED.

35. DO NOT TRAFFIC EXPOSED SOIL SURFACE WITH CONSTRUCTION EQUIPMENT. IF FEASIBLE, PERFORM EXCAVATIONS WITH EQUIPMENT POSITIONED OUTSIDE THE LIMITS OF THE INFILTRATION SYSTEM. AFTER THE INFILTRATION SYSTEM AREA IS EXCAVATED TO THE FINAL DESIGN ELEVATION, THE FLOOR SHOULD BE DEEPLY TILLED WITH A ROTARY TILLER OR DISC HARROW TO RESTORE INFILTRATION RATES, FOLLOWED BY A PASS WITH A LEVELING DRAG. DO NOT PLACE INFILTRATION SYSTEMS INTO SERVICE UNTIL THE CONTRIBUTING AREAS HAVE BEEN FULLY STABILIZED.

WINTER CONSTRUCTION NOTES

1. AN AREA SHALL BE CONSIDERED STABILIZED WHEN EXPOSED SURFACES HAVE BEEN EITHER MULCHED WITH HAY AT A RATE OF 100 LB/1000 S.F. OR DORMANT SEEDED, MULCHED AND ADEQUATELY ANCHORED BY AN APPROVED ANCHORING TECHNIQUE. IN ALL CASES, MULCH SHALL BE APPLIED SO THAT THE SOIL SURFACE IS NOT VISIBLE THROUGH THE MULCH.

2. FROM OCTOBER 15 TO APRIL 1, LOAM AND SEED WILL NOT BE REQUIRED. DURING PERIODS OF TEMPERATURES ABOVE FREEZING, DISTURBED AREAS SHALL BE FINE GRADED AND PROTECTED WITH MULCH OR TEMPORARILY SEEDED AND MULCHED UNTIL PERMANENT SEEDING CAN BE APPLIED. AFTER NOVEMBER 1, DISTURBED AREAS MAY BE LOAMED, FINE GRADED AND DORMANT SEEDED AT A RATE 200-300% HIGHER THAN THE SPECIFIED PERMANENT SEEDING RATE. IF CONSTRUCTION CONTINUES DURING FREEZING WEATHER, DISTURBED AREAS SHALL BE GRADED BEFORE FREEZING AND TEMPORARILY STABILIZED WITH MULCH. DISTURBED AREAS SHALL NOT BE LEFT OVER THE WINTER OR FOR ANY OTHER EXTENDED PERIOD OF TIME UNLESS STABILIZED WITH MULCH.

3. FROM NOVEMBER 1 TO APRIL 15 ALL MULCH SHALL BE ANCHORED BY EITHER PEG LINE, MULCH NETTING, ASPHALT EMULSION CHEMICAL, TRACK OR WOOD CELLULOSE FIBER. MULCH NETTING SHALL BE USED TO ANCHOR MULCH IN ALL DRAINAGE WAYS WITH SLOPES GREATER THAN 3%, SLOPES EXPOSED TO DIRECT WINDS AND FOR SLOPES GREATER THAN 8%. MULCH NETTING SHALL BE USED TO ANCHOR MULCH IN ALL AREAS WITH SLOPES GREATER THAN 15%. AFTER OCTOBER 1, THE SAME APPLIES TO ALL SLOPES GREATER THAN 8%.

4. SNOW SHALL BE REMOVED FROM AREAS OF SEEDING AND MULCHING PRIOR TO PLACEMENT.

5. FOR WINTER STABILIZATION, HAY MULCH SHALL BE APPLIED AT TWICE THE STANDARD TEMPORARY STABILIZATION RATE. AT THE END OF EACH CONSTRUCTION DAY, AREAS THAT HAVE BEEN BROUGHT TO FINAL GRADE SHALL BE STABILIZED. MULCH SHALL NOT BE SPREAD ON TOP OF SNOW.

6. ALL AREAS WITHIN 75 FEET OF A PROTECTED NATURAL RESOURCE SHALL BE PROTECTED WITH A DOUBLE ROW OF SEDIMENT BARRIERS.

7. ALL VEGETATED DITCH LINES THAT HAVE NOT BEEN STABILIZED BY NOVEMBER 1, OR WILL BE WORKED DURING THE WINTER CONSTRUCTION PERIOD, SHALL BE STABILIZED WITH AN APPROPRIATE STONE LINING BACKED BY AN APPROPRIATE GRAVEL BED OR GEOTEXTILE UNLESS SPECIFICALLY RELEASED FROM THIS STANDARD BY THE MDEP.

8. MULCH NETTING SHALL BE USED TO ANCHOR MULCH ON ALL SLOPES GREATER THAN 8% UNLESS EROSION CONTROL BLANKETS OR EROSION CONTROL MIX IS BEING USED ON SUCH SLOPES.

9. AFTER OCTOBER 15, INCOMPLETE ROAD OR PARKING SURFACES (WHERE WORK HAS STOPPED FOR THE WINTER SEASON) SHALL BE PROTECTED WITH A MINIMUM OF 3 INCHES OF CRUSHED GRAVEL PER NHDOT ITEM 304.3

10. ALL DITCHES OR SWALES WHICH DO NOT EXHIBIT A MINIMUM OF 85% VEGETATIVE GROWTH BY OCTOBER 15, OR WHICH ARE DISTURBED AFTER OCTOBER 15, SHALL BE STABILIZED BY SEEDING AND INSTALLING EROSION CONTROL BLANKETS ON SLOPES GREATER THAN 3:1, AND FOR ALL OTHER SLOPES BY SEEDING AND PLACING 3 TO 4 TONS OF MULCH PER ACRE, SECURED WITH ANCHORED NETTING. THE INSTALLATION OF EROSION CONTROL BLANKETS OR MULCH AND NETTING SHALL NOT OCCUR OVER ACCUMULATED SNOW OR ON FROZEN GROUND AND SHALL BE COMPLETED IN ADVANCE OF THAW OR SPRING MELT EVENTS.

11. ALL DITCHES OR SWALES WHICH DO NOT EXHIBIT A MINIMUM OF 85% VEGETATIVE GROWTH BY OCTOBER 15, OR WHICH ARE DISTURBED AFTER OCTOBER 15, SHALL BE STABILIZED TEMPORARILY WITH STONE OR EROSION CONTROL BLANKETS APPROPRIATE FOR THE DESIGN FLOW CONDITIONS.

E&S INSPECTION/MAINTENANCE DURING CONSTRUCTION

A. INSPECTION AND CORRECTIVE ACTION. INSPECT DISTURBED AND IMPERVIOUS AREAS, EROSION CONTROL MEASURES, MATERIALS STORAGE AREAS THAT ARE EXPOSED TO PRECIPITATION, AND LOCATIONS WHERE VEHICLES ENTER OR EXIT THE SITE. INSPECT THESE AREAS AT LEAST ONCE A WEEK AS WELL AS BEFORE AND WITHIN 24 HOURS AFTER A STORM EVENT (RAINFALL), AND PRIOR TO COMPLETING PERMANENT STABILIZATION MEASURES. A PERSON WITH KNOWLEDGE OF EROSION AND STORMWATER CONTROL, INCLUDING THE STANDARDS AND CONDITIONS IN THE PERMIT, SHALL CONDUCT THE INSPECTIONS.

B. MAINTENANCE. IF BEST MANAGEMENT PRACTICES (BMPS) NEED TO BE REPAIRED, THE REPAIR WORK SHOULD BE INITIATED UPON DISCOVERY OF THE PROBLEM BUT NO LATER THAN THE END OF THE NEXT WORKDAY. IF ADDITIONAL BMPS OR SIGNIFICANT REPAIR OF BMPS ARE NECESSARY, IMPLEMENTATION MUST BE COMPLETED WITHIN 7 CALENDAR DAYS AND PRIOR TO ANY STORM EVENT (RAINFALL). ALL MEASURES MUST BE MAINTAINED IN EFFECTIVE OPERATING CONDITION UNTIL AREAS ARE PERMANENTLY STABILIZED.

C. DOCUMENTATION. KEEP A LOG (REPORT) SUMMARIZING THE INSPECTIONS AND ANY CORRECTIVE ACTION TAKEN. THE LOG MUST INCLUDE THE NAME(S) AND QUALIFICATIONS OF THE PERSON MAKING THE INSPECTIONS, THE DATE(S) OF THE INSPECTIONS, AND MAJOR OBSERVATIONS ABOUT THE OPERATION AND MAINTENANCE OF EROSION AND SEDIMENTATION CONTROLS, MATERIALS STORAGE AREAS, AND VEHICLES ACCESS POINTS TO THE PARCEL. MAJOR OBSERVATIONS MUST INCLUDE BMPS THAT NEED MAINTENANCE, BMPS THAT FAILED TO OPERATE AS DESIGNED OR PROVED INADEQUATE FOR A PARTICULAR LOCATION, AND LOCATION(S) WHERE ADDITIONAL BMPS ARE NEEDED. FOR EACH BMP REQUIRING MAINTENANCE, BMP NEEDING REPLACEMENT, AND LOCATION NEEDING ADDITIONAL BMPS, NOTE IN THE LOG THE CORRECTIVE ACTION TAKEN AND WHEN IT WAS TAKEN. THE LOG MUST BE MADE ACCESSIBLE TO DEPARTMENT STAFF AND A COPY MUST BE PROVIDED UPON REQUEST. THE PERMITTEE SHALL RETAIN A COPY OF THE LOG FOR A PERIOD OF AT LEAST THREE YEARS FROM THE COMPLETION OF PERMANENT STABILIZATION.

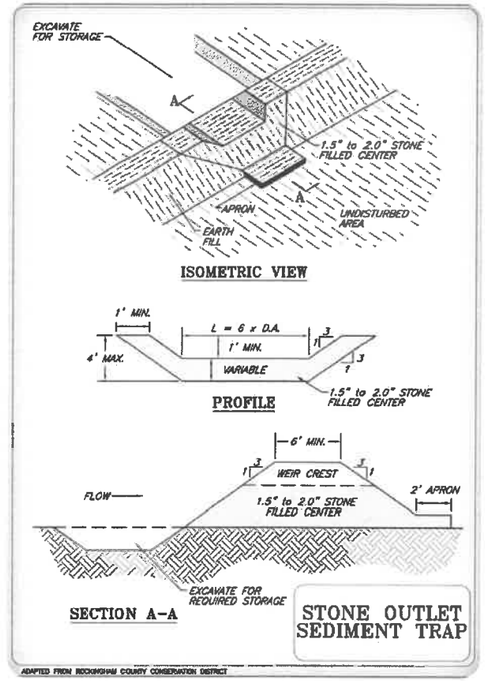

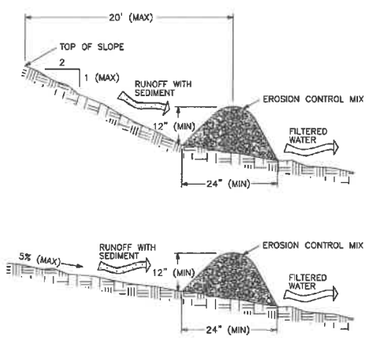

EROSION CONTROL MIX COMPOSITION STANDARDS:

- THE ORGANIC MATTER CONTENT SHALL BE BETWEEN 80 AND 100%, DRY WEIGHT BASIS.
- PARTICLE SIZE BY WEIGHT SHALL BE 100% PASSING A 6" SCREEN AND A MINIMUM OF 70%, MAXIMUM OF 85% PASSING A 0.75" SCREEN.
- THE ORGANIC PORTION NEEDS TO BE FIBROUS AND ELONGATED
- LARGE PORTIONS OF SILTS, CLAYS OR FINE SANDS ARE NOT ACCEPTABLE IN THE MIX
- SOLUBLE SALTS CONTENT SHALL BE <4.0 mmhos/cm
- THE pH SHOULD FALL BETWEEN 5.0 AND 8.0

EROSION CONTROL MIX BERM
(NTS)

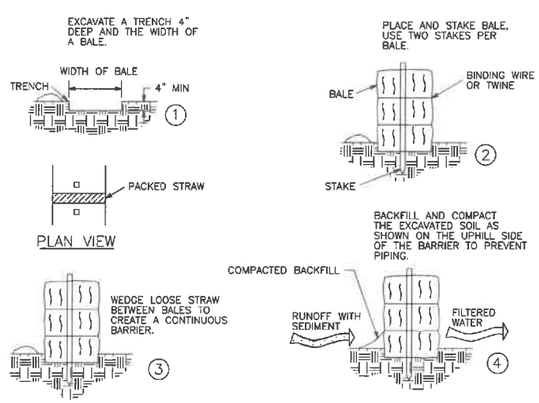

NOTES:

1. PLACE BALES IN A SINGLE ROW, LENGTHWISE ON THE CONTOUR.
2. PLACE BALES 10' AWAY FROM THE TOE OF SLOPE.
3. IN SLOPING AREAS WHERE SURFACE FLOW FOLLOWS THE BALE LINE, INSTALL PERPENDICULAR BALE CHECKS AT APPROPRIATE INTERVALS (100' MAX.)

HAY BALE BARRIER
(NTS)

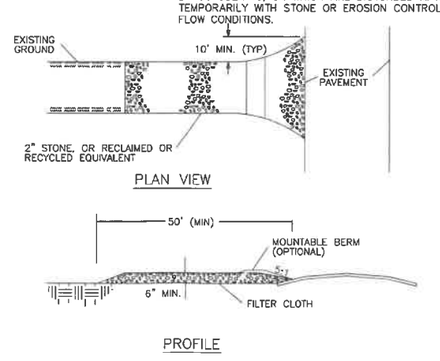

NOTES:

1. GEOTEXTILE: PLACE FILTER CLOTH OVER ENTIRE AREA TO BE COVERED WITH AGGREGATE. FILTER CLOTH WILL NOT BE REQUIRED ON A SINGLE FAMILY RESIDENTIAL LOT.
2. PIPING OF SURFACE WATER UNDER ENTRANCE SHALL BE PROVIDED AS REQUIRED. IF PIPING IS IMPOSSIBLE, A MOUNTABLE BERM WITH A 5:1 SLOPE WILL BE PERMITTED.

STABILIZED CONSTRUCTION ENTRANCE

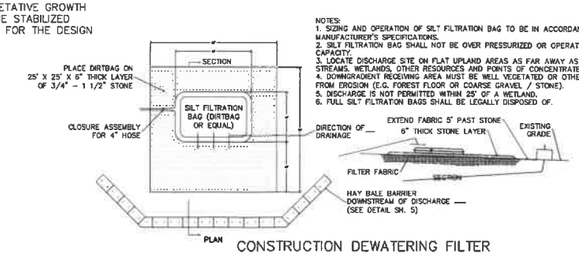

NOTES:
1. SIZING AND OPERATION OF SILT FILTRATION BAG TO BE IN ACCORDANCE WITH MANUFACTURER'S SPECIFICATIONS.
2. SILT FILTRATION BAG SHALL NOT BE OVER PRESSURIZED OR OPERATED BEYOND CAPACITY.
3. LOCATE DISCHARGE SITE ON FLAT UPLAND AREAS AS FAR AWAY AS POSSIBLE FROM STREAMS, WETLANDS, OTHER RESOURCES AND POINTS OF CONCENTRATED FLOW.
4. DOWNGRADIENT RECEIVING AREA MUST BE WELL VEGETATED OR OTHERWISE STABLE FROM EROSION (E.G. FOREST FLOOR OR COARSE GRAVEL / STONE).
5. DISCHARGE IS NOT PERMITTED WITHIN 25' OF A WETLAND.
6. FULL SILT FILTRATION BAGS SHALL BE LEGALLY DISPOSED OF.

CONSTRUCTION DEWATERING FILTER DETAIL FOR PUMPED DISCHARGE
(NTS)

NO.	DESCRIPTION	DATE
A	NHDES AOT PERMIT REVISIONS	08/07/20

REVISIONS

STATE OF NEW HAMPSHIRE — KENNETH A. WOOD No. 8850 — LICENSED PROFESSIONAL ENGINEER

SITE DETAILS
INTEC AUTOMATION
6 INDUSTRIAL WAY, ROCHESTER, NH

FOR: INTEC AUTOMATION
PO BOX 1653
ROCHESTER NH, 03867

ATTAR ENGINEERING, INC.
CIVIL ◆ STRUCTURAL ◆ MARINE
1284 STATE ROAD - ELIOT, MAINE 03903
PHONE: (207)439-6023 FAX: (207)439-2128

SCALE: 1" = 50'	APPROVED BY:	DRAWN BY: NB
DATE: 04/06/20		REVISION DATE: A : 08/07/20
JOB NO: C164-20	FILE: IRM_DET.DWG	SHEET: 9 OF 14

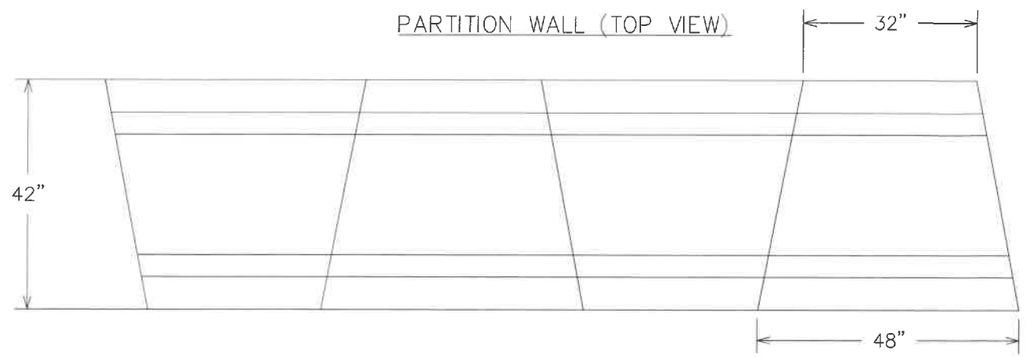

LONDONBOULDER WALL LAYOUT DETAIL
(NTS)

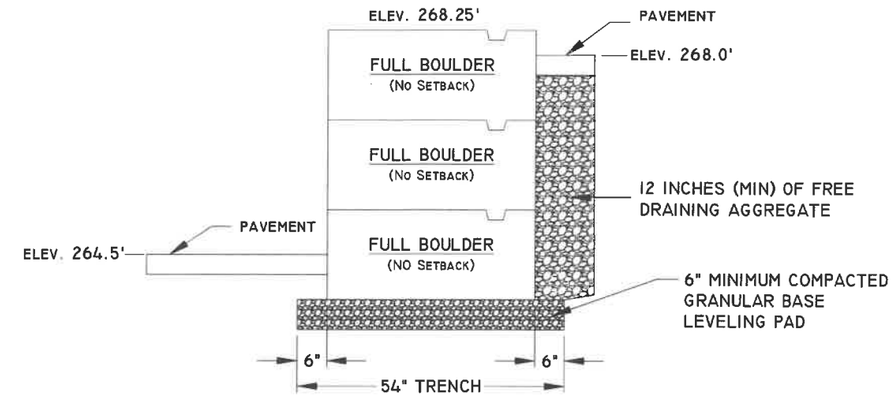

LONDONBOULDER FROM GENEST PRECAST OR
APPROVED EQUAL – NO SETBACK GRAVITY WALL
(NTS)

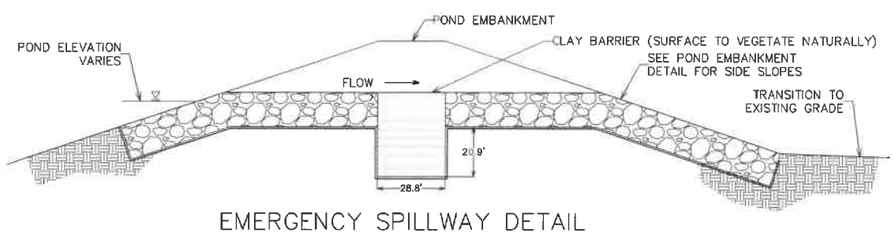

EMERGENCY SPILLWAY DETAIL
(NTS)

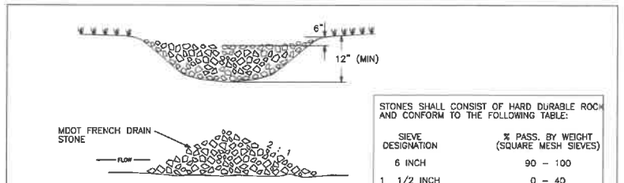

STONES SHALL CONSIST OF HARD DURABLE ROCK AND CONFORM TO THE FOLLOWING TABLE:

SIEVE DESIGNATION	% PASS. BY WEIGHT (SQUARE MESH SIEVES)
6 INCH	90 – 100
1 1/2 INCH	0 – 40
NO. 4	0 – 5

L = THE DISTANCE SUCH THAT POINTS A AND B ARE OF EQUAL ELEVATION.

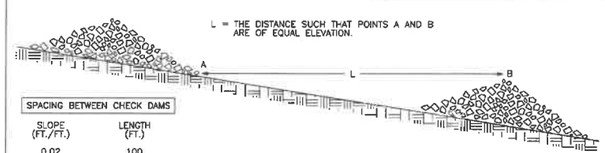

SPACING BETWEEN CHECK DAMS

SLOPE (FT./FT.)	LENGTH (FT.)
0.02	100
0.03	66
0.04	50
0.05	40
0.08	25
0.10	20
0.12	17
0.15	13

STONE CHECK DAM
(NTS)

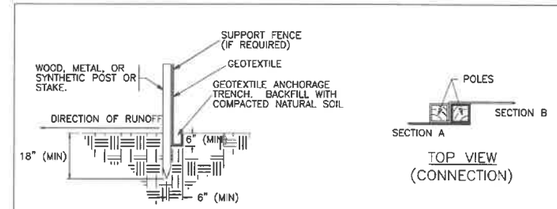

TOE – IN METHOD

TOP VIEW
(CONNECTION)

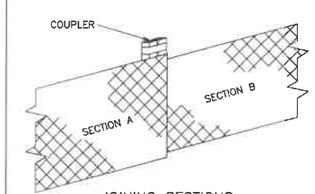

NOTES

1. DEPENDING UPON THE CONFIGURATION, ATTACH GEOTEXTILE TO WIRE MESH WITH HOG RINGS, TO STEEL POSTS WITH TIE WIRES, AND TO WOOD POSTS WITH STAPLES.

2. POSTS MAY BE WIRED TOGETHER WHEN JOINING SECTIONS.

JOINING SECTIONS

THE COUPLER CAN BE ANY ACCEPTABLE DEVICE USED TO TIE THE POLES TOGETHER

TEMPORARY SILT FENCE – NTS

STONE GRADATION REQUIREMENTS

SIEVE (METRIC)	SIEVE (US CUSTOMARY)	% PASSING (BY WEIGHT)
300 MM	12 IN	100
150 MM	6 IN	84–100
75 MM	3 IN	68–83
25.4 MM	1 IN	42–55
4.75 MM	No. 4	8–12

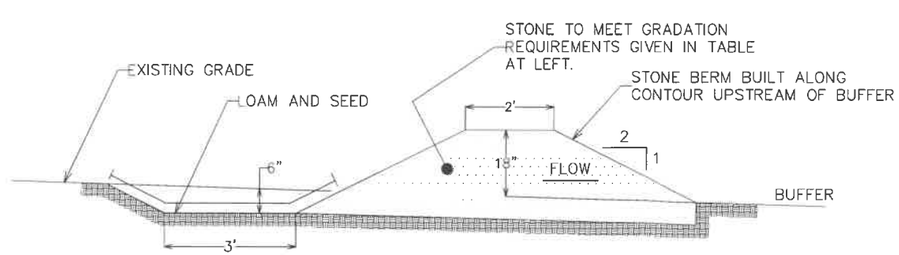

LEVEL SPREADER – TYPE C (STONE BERM)
(NTS)

NO.	DESCRIPTION	DATE
A	NHDES AOT PERMIT REVISIONS	08/07/20

REVISIONS

STATE OF NEW HAMPSHIRE
BRIDGETT A. WOOD
10th ENTRY
LICENSED PROFESSIONAL ENGINEER

SITE DETAILS
INTEC AUTOMATION
6 INDUSTRIAL WAY, ROCHESTER, NH

FOR: INTEC AUTOMATION
PO BOX 1653
ROCHESTER NH, 03867

ATTAR ENGINEERING, INC.
CIVIL ◆ STRUCTURAL ◆ MARINE
1284 STATE ROAD – ELIOT, MAINE 03903
PHONE: (207)439-6023 FAX: (207)439-2128

SCALE: 1" = 50'	APPROVED BY:	DRAWN BY: NB
DATE: 04/06/20		REVISION DATE: – : –
JOB NO: C164-20	FILE: IRM_DET.DWG	SHEET: 10 OF 14

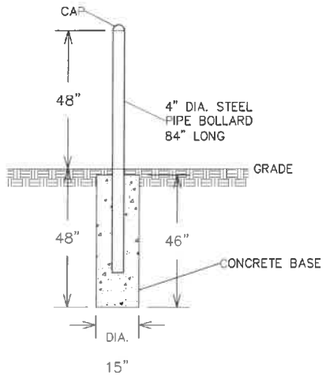

PROTECTIVE BOLLARD DETAIL
(NTS)

Intec Automation, Inc.

FREESTANDING SIGN DISPLAY DETAIL
(NTS)

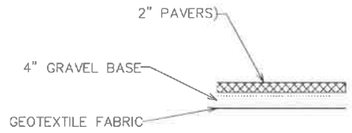

PAVER PATIO CROSS SECTION
(NTS)
GRAVEL FILL TO BE COMPACTED TO 95% MODIFIED PROCTOR

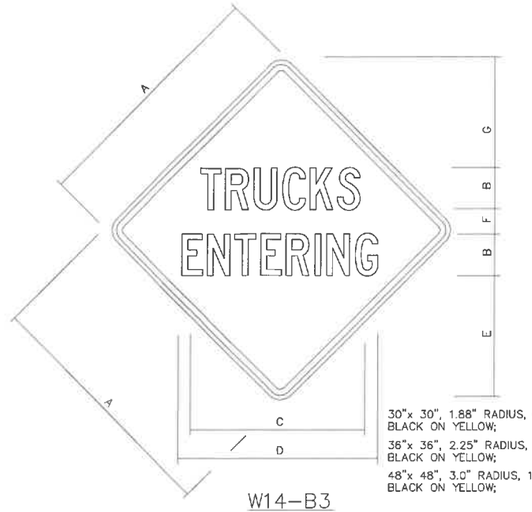

DIMENSIONS (inches)/LETTER FONTS						
A	B	C	D	E	F	G
30	5C	203/4	255/8	15	3	121/2
36	6C	23	281/4	18	31/2	151/2
48	8C	26	40	25	4	191/2

30"x 30", 1.88" RADIUS, 0.75" BORDER, 0.50" INDENT, BLACK ON YELLOW;
36"x 36", 2.25" RADIUS, 0.88" BORDER, 0.63 INDENT, BLACK ON YELLOW;
48"x 48", 3.0" RADIUS, 1.25" BORDER, 0.75" INDENT, BLACK ON YELLOW;

W14-B3

"TRUCKS ENTERING" SIGN DETAIL
(NTS)

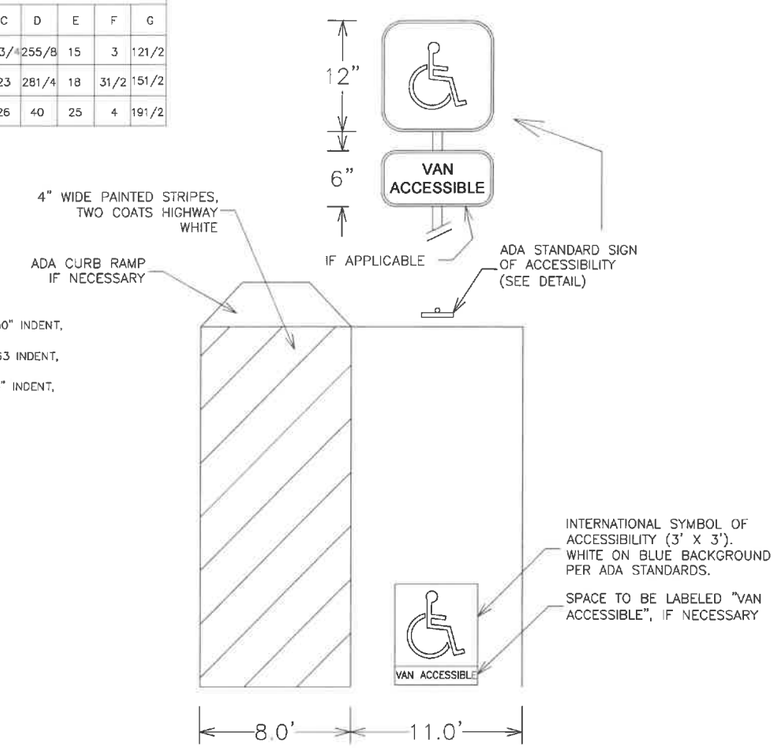

ACCESSIBLE PARKING SPACE DETAIL

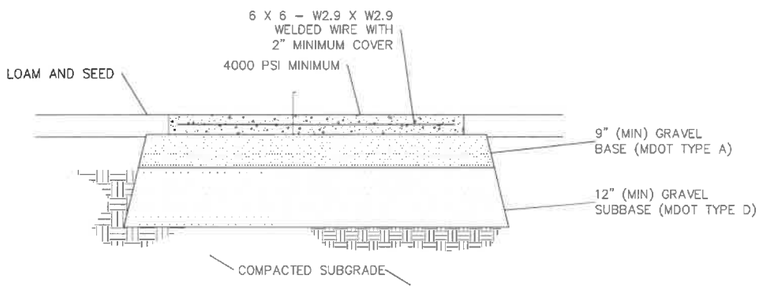

CONCRETE SIDEWALK DETAIL

PROVIDE CRACK CONTROL JOINTS AT 6' INTERVALS (MAX)
SURFACE WITH MEDIUM BROOM FINISH
(NTS)

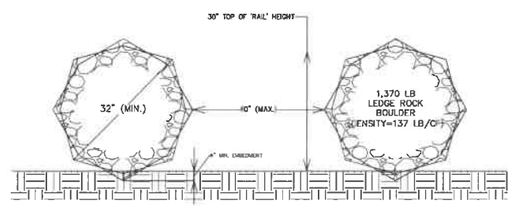

BOULDER BARRIER DETAIL
(NTS)

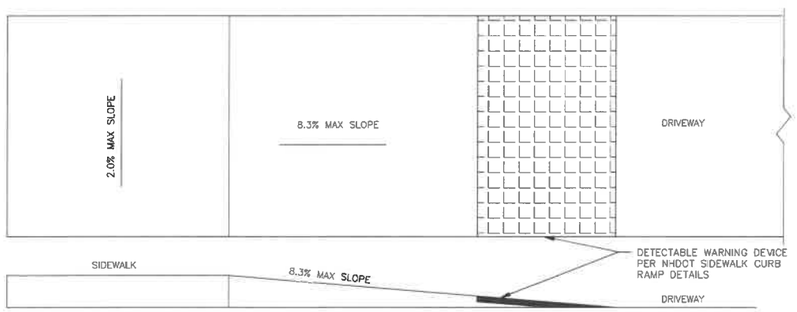

ADA CURB RAMP
(NTS)

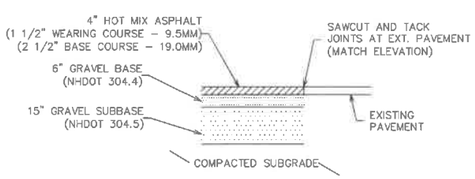

ASPHALT PARKING CROSS SECTION
(NTS)
GRAVEL FILL TO BE COMPACTED TO 95% MODIFIED PROCTOR

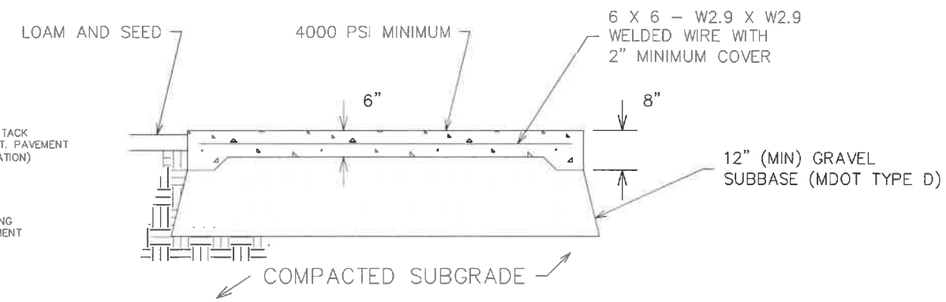

CONCRETE PAD DETAIL

PADS SHALL HAVE CRACK CONTROL JOINTS AT 6' (MAX) INTERVALS
(NTS)

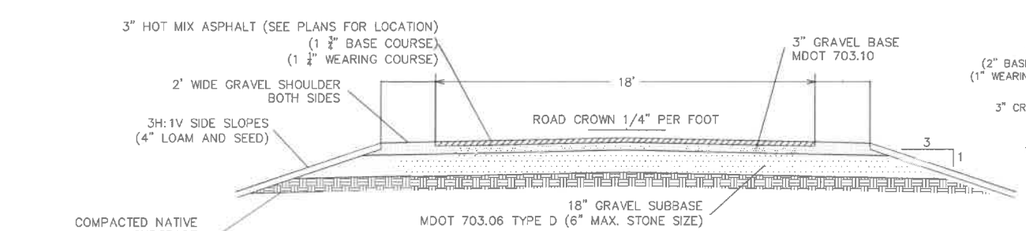

ROAD CROSS SECTION
SCALE: (NTS)
GRAVEL FILL TO BE COMPACTED TO 95% MODIFIED PROCTOR

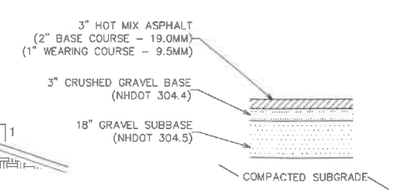

LOADING DOCK & DRIVEWAY CROSS SECTION
(NTS)
GRAVEL FILL TO BE COMPACTED TO 95% MODIFIED PROCTOR

NO.	DESCRIPTION	DATE
A	NHDES AOT PERMIT REVISIONS	08/07/20

REVISIONS

STATE OF NEW HAMPSHIRE — ROBERT A. WOOD No. 6812 — LICENSED PROFESSIONAL ENGINEER

SITE DETAILS
INTEC AUTOMATION
6 INDUSTRIAL WAY, ROCHESTER, NH

FOR: INTEC AUTOMATION
PO BOX 1653
ROCHESTER NH, 03867

ATTAR ENGINEERING, INC.
CIVIL ◆ STRUCTURAL ◆ MARINE
1284 STATE ROAD – ELIOT, MAINE 03903
PHONE: (207)439-6023 FAX: (207)439-2128

SCALE: 1" = 50'	APPROVED BY:	DRAWN BY: NB
DATE: 04/06/20		REVISION DATE: – : –
JOB NO: C164-20	FILE: IRM_DET.DWG	SHEET: 11 OF 14

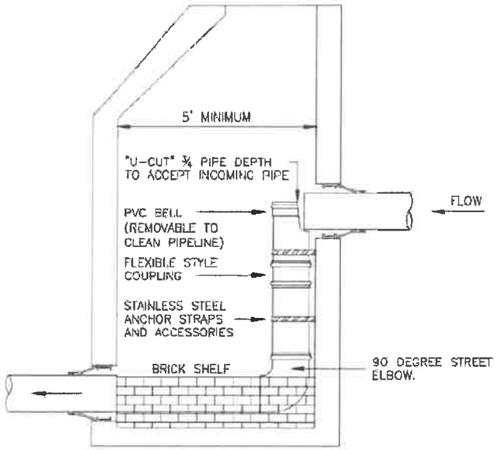

NOTES:

1. MANHOLES SHALL BE CONSTRUCTED IN ACCORDANCE TO THE CITY OF CONCORD STANDARDS FOR SANITARY MANHOLE CONSTRUCTION
2. INSIDE DROP MANHOLES SHALL HAVE A MINIMUM 5' INSIDE DIAMETER
3. IF CONNECTING TO AN EXISTING MANHOLE THAT HAS NO OTHER DROP PIPING, A SINGLE 8" INSIDE DROP WILL BE ALLOWED
4. ANCHOR STRAPS (MINIMUM OF 2) AND BOLTS TO BE 304 OR 316 STAINLESS STEEL AND NOT MORE THAN 3' ON CENTER. SECURE AS DIRECTED: STRAPS – 1" WIDE, BOLTS – ⅜" X 2½" LONG

SEWER FORCEMAIN INSIDE DROP MANHOLE DETAIL

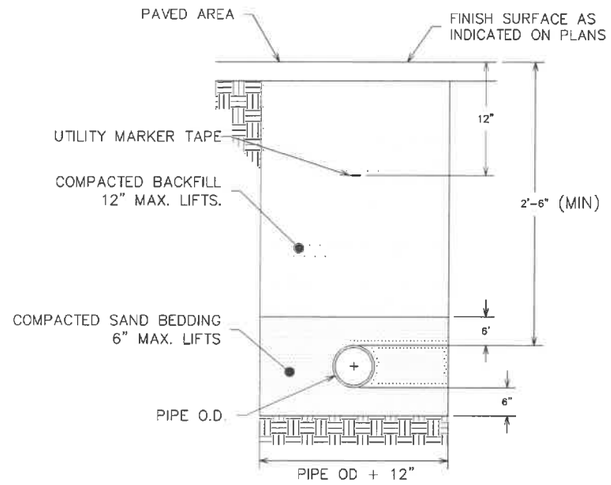

UTILITY CONDUIT TRENCH DETAIL
(NTS)

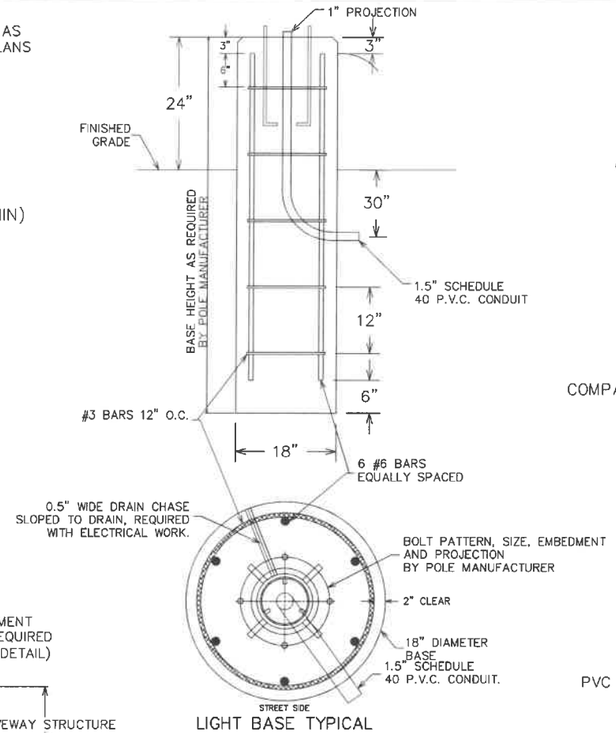

LIGHT BASE TYPICAL
(NTS)

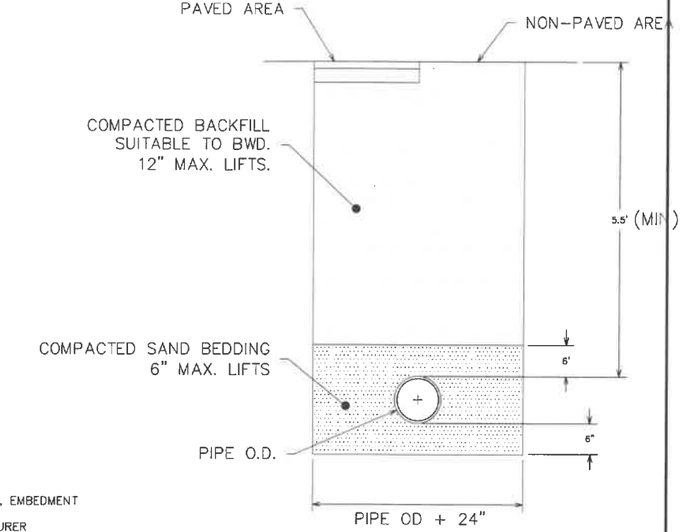

WATER LINE TRENCH DETAIL
(NTS)

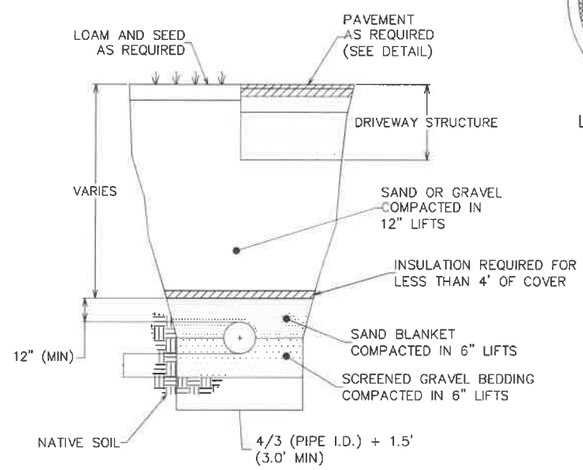

SEWER PIPE TRENCH DETAIL
SCALE: NTS

TRENCH TO BE SUPPORTED BY SLOPING BACK AT 2:1 OR OTHER ACCEPTABLE METHOD.

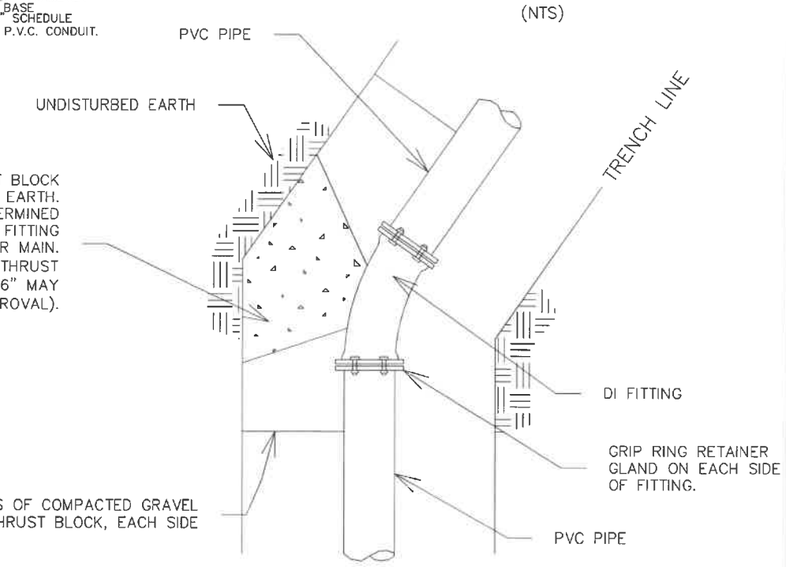

TYPICAL THRUST BLOCK BEHIND FITTINGS INSTALLATION
(NTS)

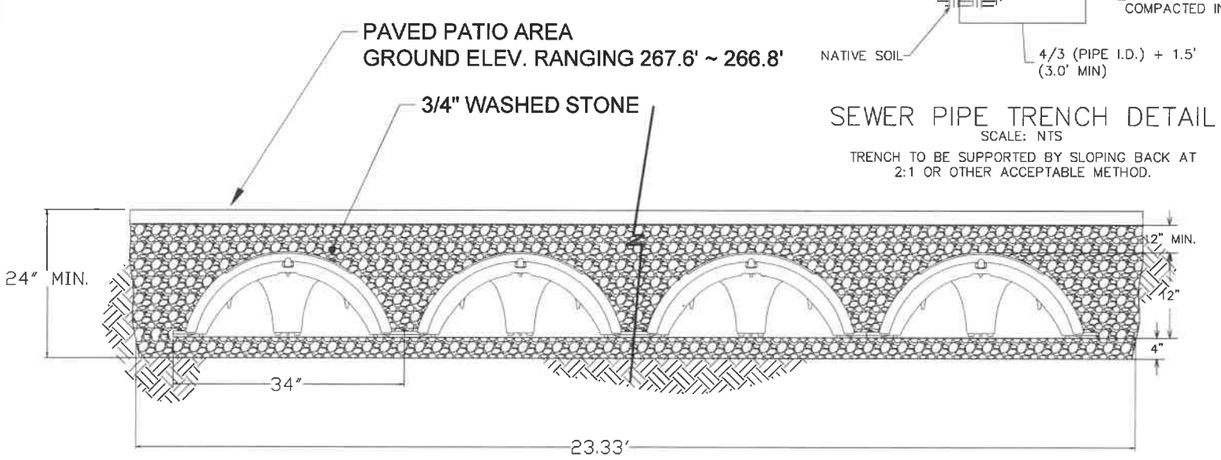

CROSS-SECTION
8 CHAMBERS X 14 CHAMBERS BED
(NTS)
**SHWT @ ~260.5' - SEE SHEET 5

NO.	DESCRIPTION	DATE
B	CITY ENGINEER REVISIONS	09/24/20
A	NHDES AOT PERMIT REVISIONS	08/07/20

REVISIONS

SITE DETAILS
INTEC AUTOMATION
6 INDUSTRIAL WAY, ROCHESTER, NH

FOR: INTEC AUTOMATION
PO BOX 1653
ROCHESTER NH, 03867

ATTAR ENGINEERING, INC.
CIVIL ◆ STRUCTURAL ◆ MARINE
1284 STATE ROAD – ELIOT, MAINE 03903
PHONE: (207)439-6023 FAX: (207)439-2128

SCALE: 1" = 50'	APPROVED BY:	DRAWN BY: NB
DATE: 4/6/2020		REVISION DATE: B : 09/24/20
JOB NO: C164-20	FILE: IRM_DET.DWG	SHEET: 12 OF 14

INFILTRATOR WATER TECHNOLOGIES
QUICK4 PLUS STANDARD CHAMBER
PRODUCT SPECIFICATIONS
(NOT TO SCALE)

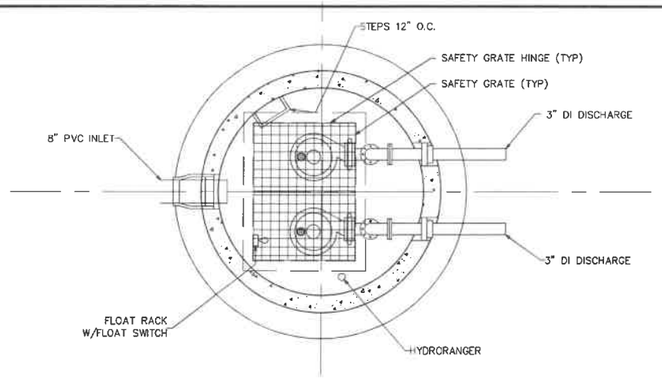

PUMP STATION PLAN
(NTS)

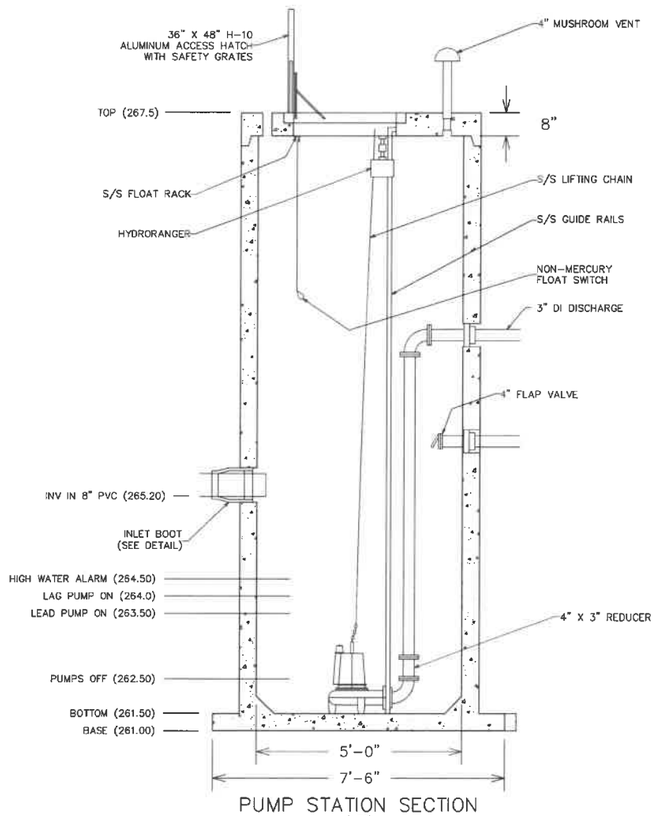

PUMP STATION SECTION
(NTS)

NOTES:
1. JUNCTION BOXES TO BE MOUNTED OUTSIDE OF WET WELL.

2. ALL ELECTRICAL COMPONENTS AND ENCLOSURES SHALL BE EXPLOSION PROOF.

3. PUMPS TO BE BARNES 4SE, 2.8HP, 6.25" IMP. DIA. (4SE2824L), PUMP STATION IS DESIGN TO OPERATE AT APPROXIMATELY 55 GPM (32' TDH).

4. SHOP DRAWINGS AND OPERATION AND MAINTENANCE MANUALS TO BE PROVIDED BY MANUFACTURER.

5. FLOAT SWITCHES TO BE NON-MERCURY.

6. ADDITIONAL REQUIREMENTS:

- THE CONTROL SYSTEM SHALL INCLUDE REDUNDANT PUMPING CAPACITY.
- REDUNDANT ALARM ACTIVATION.
- LOCAL ALARM.
- ELECTRICAL CONNECTION FOR EMERGENCY POWER (SEE NOTE 8).
- AUTOMATIC AND MANUAL PUMP ACTIVATION.
- RUN TIME METER.

7. THIS PUMP STATION WILL BE PRIVATELY OWNED AND MAINTAINED BY THE PROPERTY OWNER. IT IS RECOMMENDED THAT THE ASSOCIATION CONTRACT WITH A PUMP STATION MAINTENANCE COMPANY TO PROVIDE REGULAR MAINTENANCE AND EMERGENCY SERVICE. THE MAINTENANCE COMPANY SHALL HAVE THE CAPACITY TO PROVIDE A PORTABLE GENERATOR IN THE EVENT OF A POWER OUTAGE.

8. SEASONAL HIGH WATER TABLE ELEVATION = 260.5' - SEE SOILS SHEET 5

TOP VIEW

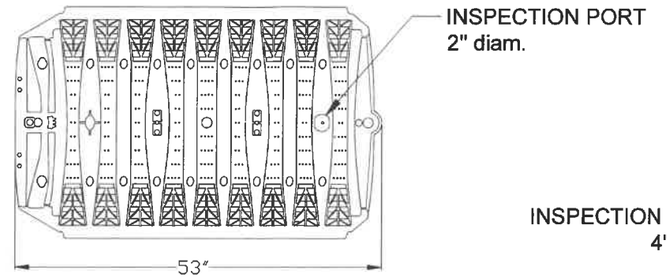

QUICK4 PLUS ALL-IN-ONE 12 END CAP

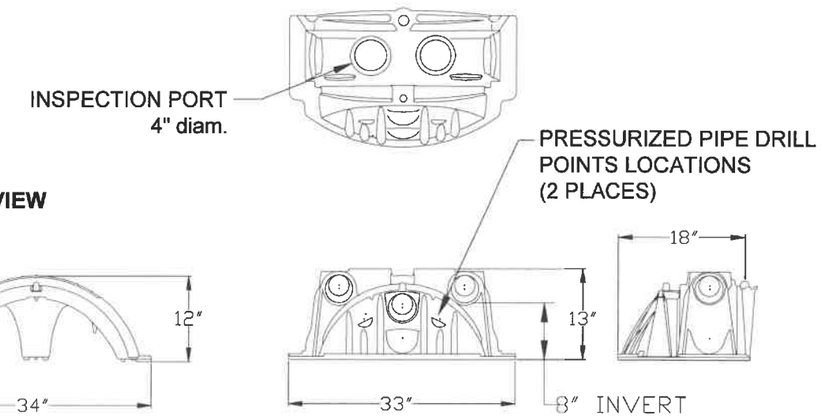

SIDE VIEW

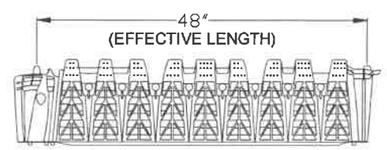

END VIEW

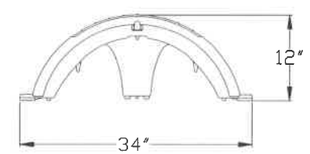

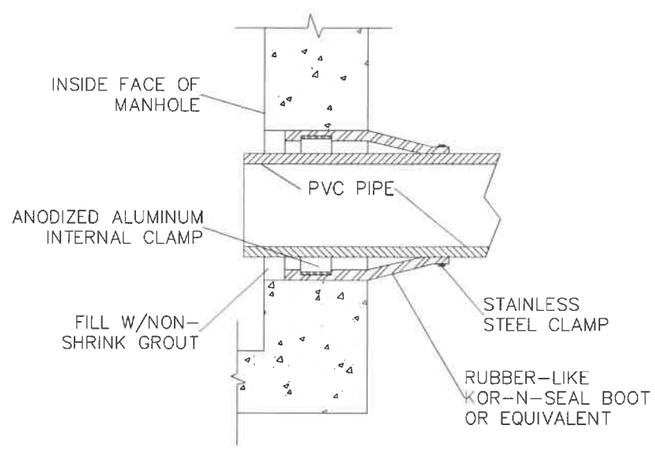

TYPICAL BOOT GASKET
SCALE: NTS

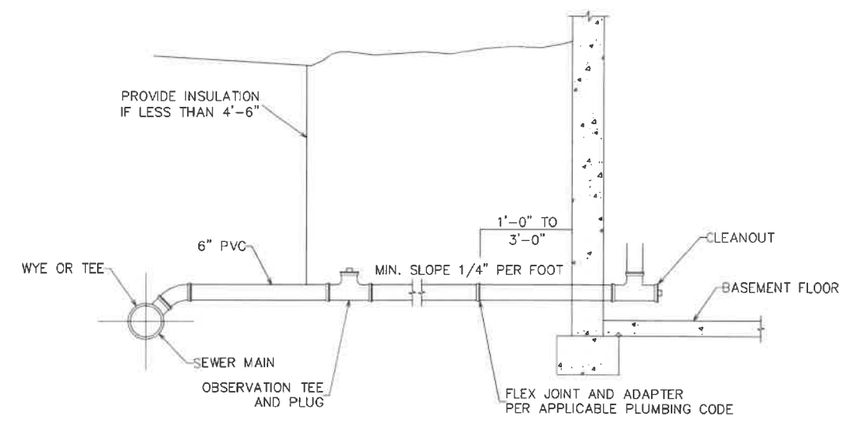

TYPICAL SERVICE CONNECTION
AND BUILDING LATERAL DETAIL
SCALE: NTS

NOTE: HOUSE SEWER MAY BE LOCATED BENEATH BASEMENT FLOOR

NO.	DESCRIPTION	DATE
A	NHDES AOT PERMIT REVISIONS	08/07/20

REVISIONS

SITE DETAILS
TEN ROD RD
6 INDUSTRIAL WAY, ROCHESTER, NH

FOR: INTEC AUTOMATION
PO BOX 1653
ROCHESTER NH, 03867

ATTAR ENGINEERING, INC.
CIVIL ◆ STRUCTURAL ◆ MARINE
1284 STATE ROAD – ELIOT, MAINE 03903
PHONE: (207)439-6023 FAX: (207)439-2128

SCALE: 1" = 50'	APPROVED BY:	DRAWN BY: NB
DATE: 04/08/20		REVISION DATE: – : –
JOB NO: C164-20	FILE: IRM_DET.DWG	SHEET: 13 OF 14

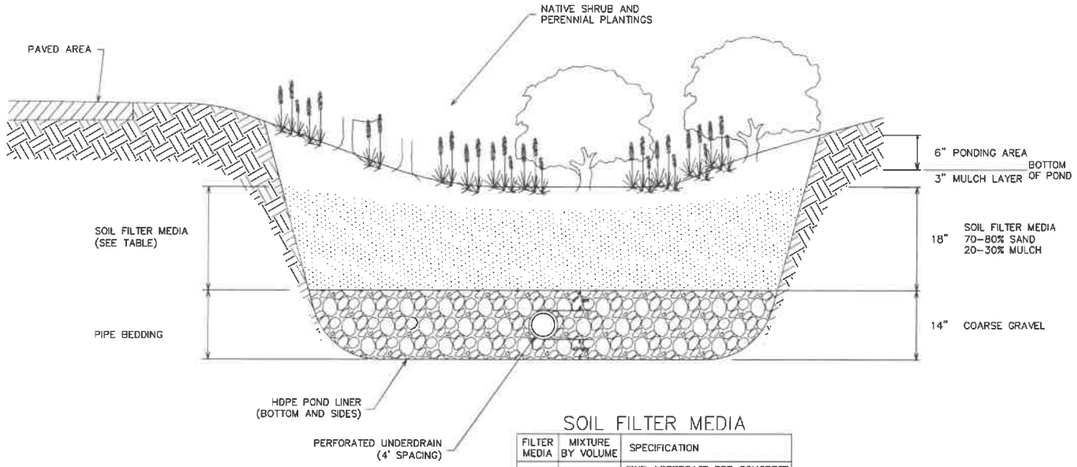

SOIL FILTER MEDIA

FILTER MEDIA	MIXTURE BY VOLUME	SPECIFICATION
SAND	70-80%	FINE AGGREGATE FOR CONCRETE
MULCH	20-30%	MODERATELY FINE, SHREDDED BARK OR WOOD FIBER MULCH WITH LESS THAN 10% PASSING THE #200 SIEVE.

BIORETENTION CELL CROSS SECTION

APPLIES TO POND # (X' UNDERDRAIN PIPE SPACING)
(NTS)

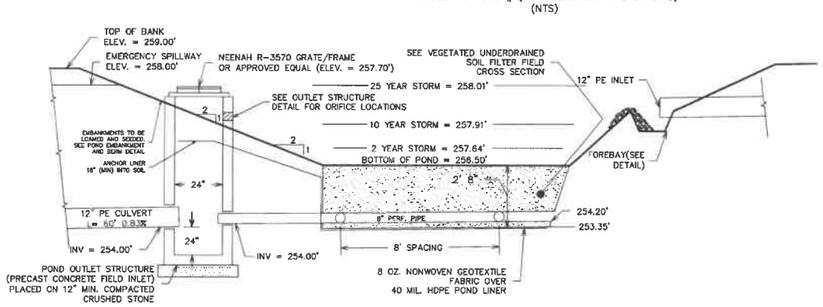

BIORETENTION(RAIN GARDEN) POND 1

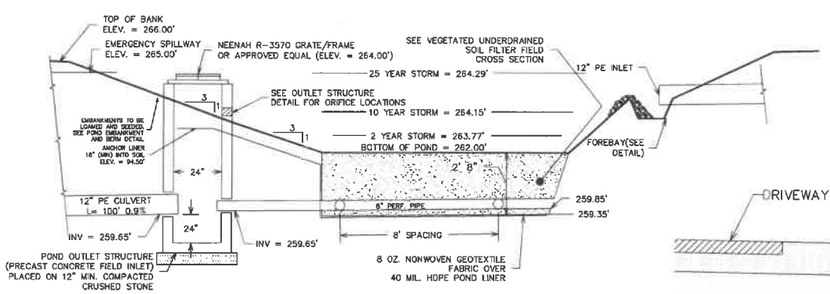

BIORETENTION(RAIN GARDEN) POND 2

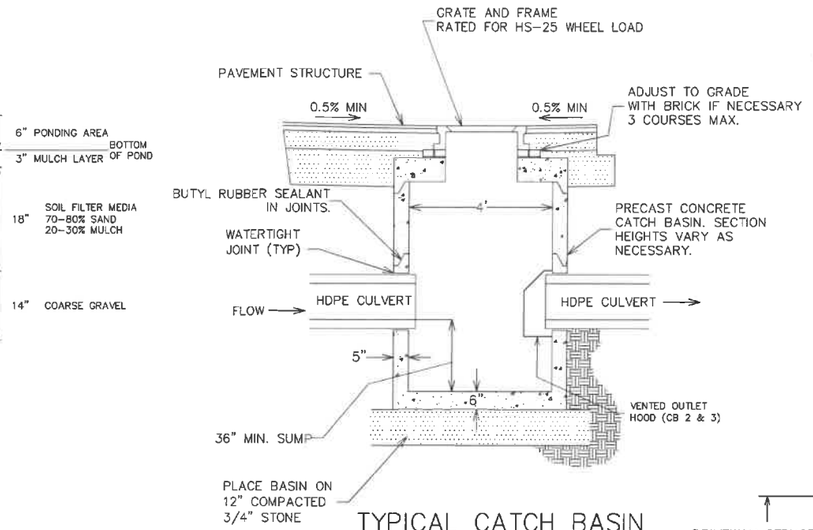

TYPICAL CATCH BASIN

(NTS)

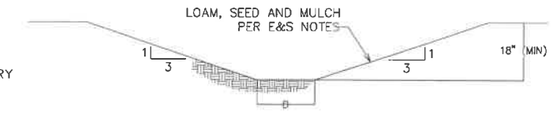

VEGETATED SWALE DETAIL

NTS

B (BOTTOM WIDTH) SHALL BE 2' (TYPE 1 SWALE).

SIDE SLOPES STEEPER THAN 2:1 SHALL BE UNDERLAIN WITH POLYJUTE EROSION CONTROL MESH AS PER E&S NOTE 9 ON SHEET 8

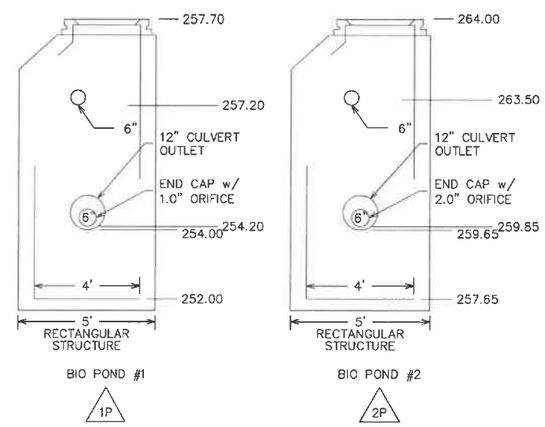

BIORETENTION OUTLET STRUCTURES

ORIFICES TO BE PROTECTED WITH TRASH SCREENS (2" MAX. OPENINGS) FASTENED TO OUTLET STRUCTURES WITH SS PARTS.

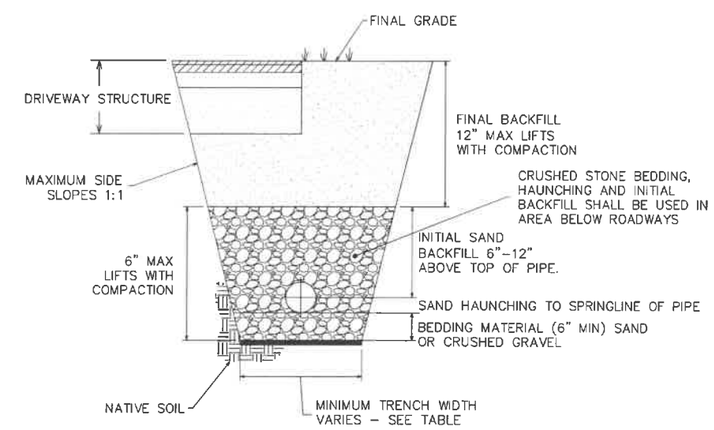

HDPE CULVERT TRENCH DETAIL

(NTS)

TRENCH TO BE SUPPORTED BY SLOPING BACK AT 2:1 OR OTHER ACCEPTABLE METHOD.

NOMINAL DIAMETER (IN)	MIN. TRENCH WIDTH (IN)
4	21
6	23
8	25
10	28
12	31
15	34
18	39
24	48
30	56
36	78
42	83
48	89
60	102

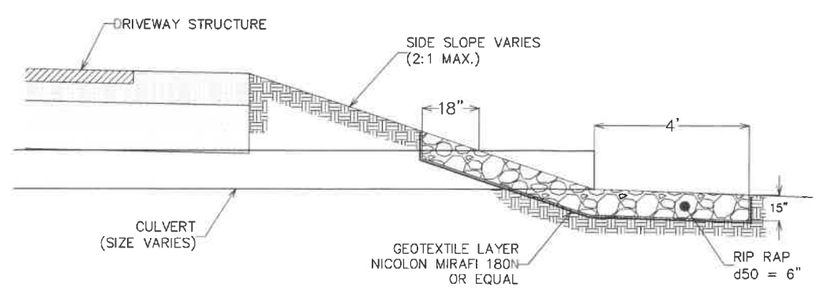

CULVERT INLET/OUTLET PROTECTION DETAIL

(NTS)

NO.	DESCRIPTION	DATE
A	NHDES AOT PERMIT REVISIONS	08/07/20

REVISIONS

STATE OF NEW HAMPSHIRE KENNETH A. WOOD No. 9857 LICENSED PROFESSIONAL ENGINEER

SITE DETAILS
TEN ROD RD
6 INDUSTRIAL WAY, ROCHESTER, NH

FOR: INTEC AUTOMATION
PO BOX 1653
ROCHESTER NH, 03867

ATTAR ENGINEERING, INC.
CIVIL ◆ STRUCTURAL ◆ MARINE
1284 STATE ROAD - ELIOT, MAINE 03903
PHONE: (207)439-6023 FAX: (207)439-2128

SCALE: 1" = 50'	APPROVED BY:	DRAWN BY: NB
DATE: 4/6/2020		REVISION DATE: A : 08/07/20
JOB NO: C164-20	FILE: IRM_DET.DWG	SHEET: 14 OF 14