RECEIVED
APR 10 2018

NONRESIDENTIAL SITE PLAN APPLICATION

City of Rochester, New Hampshire

[office use only. Check #_____ _ Amount $_____Date paid _____]

Date: April 10, 2018 Is a conditional use needed? Yes:____ No: X Unclear:____
(If so, we encourage you to submit an application as soon as possible.)

Property information

Tax map #: 262/267; Lot #('s): 22 & 23 / 2; Zoning district: Recycling Industrial/Agricultural

Property address/location: 36 Rochester Neck Road

Name of project (if applicable): Rochester Hauling Company Facility

Size of site: 10.3 acres; overlay zoning district(s)? No

Property owner

Name (include name of individual): Waste Management of New Hampshire, Inc.

Mailing address: 30 Rochester Neck Road, Rochester, NH

Telephone #: (603) 330-2164 Email: bmagnusson@wm.com

Applicant/developer (if different from property owner)

Name (include name of individual): _____

Mailing address: _____

Telephone #: _____ Email: _____

Engineer/designer

Name (include name of individual): Sanborn, Head & Associates, Inc. (Eric S. Steinhauser, P.E., CPESC, CPSWQ)

Mailing address: Sanborn, Head & Associates, Inc., 20 Foundry Street, Concord, NH 0330

Telephone #: (603) 415-6138 Fax #: (603) 415-1919

Email address: esteinhauser@sanbornhead.com Professional license #: 11494

Proposed activity (check all that apply)

New building(s): X Site development (other structures, parking, utilities, etc.): X

Addition(s) onto existing building(s): _____ Demolition: X Change of use: _____

Describe proposed activity/use: Relocation of the Rochester Hauling Facility that requires construction of a prefabricated metal building, associated parking areas, and stormwater management features. See narrative included in the Application.

Describe existing conditions/use (vacant land?): Existing Landfill Maintenance Garage

Utility information

City water? yes X no___; How far is City water from the site? 435'

City sewer? yes X no___; How far is City sewer from the site? 340'

If City water, what are the estimated total daily needs? 4,600 gallons per day

If City water, is it proposed for anything other than domestic purposes? yes X no___

If City sewer, do you plan to discharge anything other than domestic waste? yes X no ___

Where will stormwater be discharged? Stormwater is fully managed on site through a closed drainage system and stormwater basin. Ultimately, stormwater is discharged to wetland areas.

Building information

Type of building(s): Pre-fabricated metal building

Building height: 35 feet Finished floor elevation: 276.0 Refer to Drawings

Other information

parking spaces: existing: 21 total proposed: 157; Are there pertinent covenants? No

Number of cubic yards of earth being removed from the site 0 CY

Number of existing employees: 83; number of proposed employees total: 142

Check any that are proposed: variance X; special exception _____; conditional use ____

Wetlands: Is any fill proposed? Yes; area to be filled: 0.01 ac; buffer impact? No

Proposed *post-development* disposition of site (should total 100%)

	Square footage	% overall site
Building footprint(s) – give for each building	100,635	0.4
Parking and vehicle circulation	1,176,807	4.5
Planted/landscaped areas (excluding drainage)	5,012,423	19.3
Natural/undisturbed areas (excluding wetlands)	7,379,920	28.4
Wetlands	3,157,936	12.1
Other – drainage structures, outside storage, etc.	9,171,065	35.3

Table Notes:

1. *Wetland area should be considered approximate. WMNH owns over 1,200 acres of land and not all wetlands have been surveyed by a wetlands scientist. Within the project area, wetland areas are represented by a compilation of information determined using existing aerial photography, soils information, USFWS National Wetland Inventory Maps, and delineations conducted by Barry H. Keith, NH CWS #087.*

2. *Planted/landscaped areas within the project parcel areas represent the sum of the parcel areas subtracted by building, parking/vehicle circulation, natural/undisturbed, wetland, and other areas.*

3. *The TLR-III limit of waste containment area is considered "other."*

(Continued *Nonresidential Site Plan Application* Tax Map: 262/267 Lot: 22 & 23/2 Zone RI/AG)

Comments

Please feel free to add any comments, additional information, or requests for waivers here:

Refer to the narrative for wetland impacts.

Submission of application

This application must be signed by the property owner, applicant/developer (if different from property owner), *and/or* the agent.

I(we) hereby submit this Site Plan application to the City of Rochester Planning Board pursuant to the City of Rochester Site Plan Regulations and attest that to the best of my knowledge all of the information on this application form and in the accompanying application materials and documentation is true and accurate. As applicant/developer (if different from property owner)/as agent, I attest that I am duly authorized to act in this capacity.

Signature of property owner: [signature]

Date: 4/10/18

Signature of applicant/developer: _____

Date: _____

Signature of agent: _____

Date: _____

Authorization to enter subject property

I hereby authorize members of the Rochester Planning Board, Zoning Board of Adjustment, Conservation Commission, Planning Department, and other pertinent City departments, boards and agencies to enter my property for the purpose of evaluating this application including performing any appropriate inspections during the application phase, review phase, post-approval phase, construction phase, and occupancy phase. This authorization applies specifically to those particular individuals legitimately involved in evaluating, reviewing, or inspecting this specific application/project. It is understood that these individuals must use all reasonable care, courtesy, and diligence when entering the property.

Signature of property owner: Robert S. Mugmon

Date: 4/10/18

WASTE MANAGEMENT

TURNKEY RECYCLING & ENVIRONMENTAL ENTERPRISE
30 Rochester Neck Road
P.O. Box 7065
Rochester, NH 03839
(603) 330-2197
(603) 330-2130 Fax

April 10, 2018

Mr. James B. Campbell, Director
Planning and Development Department
City of Rochester
31 Wakefield Street
Rochester, New Hampshire 03867

Re: Letter of Intent – Application for Site Plan Approval
Rochester Hauling Company Facility
Turnkey Recycling and Environmental Enterprise
Rochester, New Hampshire

Dear Mr. Campbell:

Waste Management of New Hampshire, Inc. (WMNH) is proposing to relocate the Rochester Hauling Company Facility (RHCF) to 36 Rochester Neck Road. At present the RHCF is located near the southeastern corner of the TREE Facility on the south side of Rochester Neck Road at 189 Turnkey Way. The current RHCF location occupies an area designated for future landfill use (i.e. TLR-III Refuse Disposal Facility – South Area, hereafter referred to as the TLR-III South Area). Earthwork associated with the initial TLR-III South Area construction is anticipated to begin in 2019 necessitating the move of the existing RHCF.

The following information is provided for this Site Plan Review application.

Applicant's Name: Waste Management of New Hampshire, Inc. (property owner)

Property Locations: Landfill Maintenance Garage:
36 Rochester Neck Road, Parcel 262-23

WMNH Office:
30 Rochester Neck Road, Parcel 262-22

TLR-III Facility:
90 Rochester Neck Road, Parcel 267-2

Size and Use: Site development on Parcel 262-23 will involve construction of a pre-engineered metal building. The building will include approximately 19,000 square feet (ft^2) for vehicle maintenance and 7,200 ft^2 of office space. The existing paved driveway will be relocated to the east, and additional paved and gravel parking areas are proposed. The existing training facility building will be demolished to allow for the proposed

site development. Site development will extend limitedly onto adjacent parcels 262-22 and 267-2.

The entire area of development will disturb about 10.3 acres.

Proposed Use: WMNH is proposing to redevelop the parcel that currently supports the training facility building and the existing heavy equipment maintenance facility to include relocation of the RHCF. The existing heavy equipment maintenance facility will remain unchanged.

Previous Use: The parcel is currently used by WMNH as part of its TREE Facility operations. One building (not being modified) is WMNH's heavy equipment maintenance facility. The other building (to be demolished) is used as a training facility.

Existing Conditions: As indicated above, the RHCF project development includes parcels that currently support other TREE Facility operations. WMNH owns the properties encumbered by and abutting the parcels. No change in traffic on Rochester Neck Road is anticipated as a result of the development.

Resulting Employees: Currently approximately 83 employees staff the Rochester Hauling Company operations, 78 of which work first shift, while the remaining work second shift. The new facility is designed to accommodate approximately 144 employees (132 for first shift (107 truck drivers, 13 office staff, and 12 vehicle maintenance staff), and up to 12 vehicle maintenance staff for second shift) if expansion of this operation is possible in the future.

Hours of Operation: Facility operating hours shall be from 6 AM to 6 PM, equipment maintenance continues at the facility indoors with a reduced staff until 12 AM.

Off-street Parking: Employee parking and parking spaces for the haul trucks are located near the existing heavy equipment maintenance building and the proposed building.

Proposed Site Changes: The proposed development involves the following:

- Construction of a pre-engineered metal building. The building will include approximately 19,000 ft^2 for vehicle maintenance and 7,200 ft^2 of office space;
- Construction of a compressed natural gas (CNG) distribution system;
- Construction of paved and gravel parking areas;

- Relocation of the Rochester Neck Road driveway to the east for commercial use only and construction of a new driveway for personal vehicles and visitor from Taylor Avenue; and
- Construction of stormwater conveyance features.

Property Access: Access to the proposed vehicle maintenance building, existing heavy equipment maintenance facility, and proposed hauling company truck parking, will be the relocated driveway proposed to the east of the existing driveway from Rochester Neck Road.

Access to the proposed hauling company office and associated car parking will be gained by construction of a driveway on the southern side of Taylor Avenue.

Please contact me at 330-2140 or areichert@wm.com should you require additional information regarding this proposed development.

Sincerely,
WASTE MANAGEMENT OF NEW HAMPSHIRE, INC.

Anne Reichert

Anne Reichert, P.E.
Construction Project Manager

Enclosures: Nonresidential Site Plan Application
Mailing Labels (2 per abutter, provided separately)
Waiver Requests
22" x 34" Drawings (3 copies, provided separately)
Application Fee (provided separately)

Copies to: Peter Richer, WMNH
Steve Cates, WMNH
Eric Steinhauser, Sanborn Head

WASTE MANAGEMENT

TURNKEY RECYCLING & ENVIRONMENTAL ENTERPRISE
30 Rochester Neck Road
P.O. Box 7065
Rochester, NH 03839
(603) 330-2197
(603) 330-2130 Fax

April 10, 2018

Mr. James B. Campbell, Director
Planning and Development Department
City of Rochester
31 Wakefield Street
Rochester, New Hampshire 03867

Re: Waivers from Site Plan Regulations
Site Plan Application – Rochester Hauling Company Facility
Turnkey Recycling and Environmental Enterprise
Rochester, New Hampshire

Dear Mr. Campbell:

Waste Management of New Hampshire, Inc. (WMNH) is requesting two waivers from the Site Plan Regulations (Regulations) for the above referenced project. The waiver requests are for: (i) the requirement to provide the plans on mylar and blue or black line prints [Article II, Section 5 (3)]; (ii) the minimum number of designated off street parking spaces shall be provided on site based upon the type of use [Article III, Section 10 Part (A)], and (iii) Parking Lot Landscaping [Article III Part (E)].

PRINTING WAIVER

Article II, Section 5 (3) of the Regulations requires that "*The original of said plan shall be on mylar, and there shall also be submitted three blue or black line prints of any such plan*".

WMNH is requesting a waiver from this requirement as the use of mylar, blue line, and black line prints is outdated. As part of the application, WMNH provided 22 copies of the reduced drawings along with three full-size copies of the drawings, some of which contain color. Upon request, WMNH will provide the City with an electronic version of the drawings in Portable Document Format (*.pdf).

OFF STREET PARKING SPACES WAIVER

Article III, Section 10 (A) of the Regulations requires that "*The minimum number of designated off street parking spaces shall be provided on each site based upon the type of use, as shown in the table below*".

The proposed building includes office and industrial uses. The Table of Parking Requirements indicates the following:

Office, General – 1 parking space per 300 gross square footage (ft^2) in building; and
Industrial Use – 1 parking space per 600 gross ft^2 in building.

WMNH is requesting a waiver of 27 parking spaces from this requirement for the parcel as the parking requirement exceeds the proposed uses of the office and vehicle maintenance building and strict adherence to the ordinance would require unnecessary additional land disturbance.

The proposed office space, 7,200 ft^2, requires a minimum of 24 parking spaces, and the proposed vehicle maintenance building, 19,000 ft^2, requires a minimum of 32 parking spaces for a total of 56 parking spaces. Please know that the anticipated maximum number of employees in the office is 13 and the maximum number of employees in the vehicle maintenance building is 12 per shift, or a total of 25 parking spaces. Given the type of business, vehicle maintenance staff is limited to the number of refuse hauling trucks that are operated verses manufacturing square footage. Please also note that overflow parking is available at WMNH's Visitor's Center building, which is in walking distance to this new RHCF building.

In addition, the proposed development includes 107 haul truck parking spaces and 107 vehicle parking spaces for the truck driver's personnel vehicles. The proposed development also includes 21 parking spaces for the existing heavy equipment maintenance building and landfill operations staff that currently use the existing parking located within the proposed development area.

The following table summarizes the parking space requirements, anticipated uses, and parking spaces proposed:

Parking Waiver Summary Table			
Description	**Minimum # of Parking Spaces**	**Available # of Parking Spaces**	**Waiver Request**
Office	24	29	27
Vehicle Maintenance Facility	32		
Existing Parking	21	21	Not Applicable
Truck Driver Parking	107	107	Not Applicable
Accessible[1]	5	5	Not Applicable
Wheelchair Accessible[1]	1	1	Not Applicable
Total	190	163	**27**

As such, the proposed development proposes 27 fewer parking spaces than required by strict application of the City's ordinance.

PARKING LOT LANDSCAPING APPROACH

The properties where parking lots are proposed are zoned Recycling Industrial, and hence, the parking lot areas are exempt from the Landscaping requirements in accordance with Paragraph (2) of Part (B) General Provision of Article III – Development Standards, Section 5 – Landscaping.

[1] The required number of accessible parking spaces is based on the number of proposed car spaces.

Paragraph (2) of Part (B) General Provision of Article III – Development Standards, Section 5 – Landscaping states: *"Properties that are zoned Industrial are exempt from this entire Landscaping section herein. However, applicants in these zones are encouraged to conform with these standards, at their discretion."*

WMNH approach to addressing the landscaping requirements of the Regulations is as follows.

- Paragraph (2) of Part (E) Parking Lots of Article III – Development Standards, Section 5 requires a vegetative buffer from the public right-of-way. Existing treed buffers are located between the Rochester Neck Road and the proposed development, and between Taylor Avenue, a private road, and the proposed development. WMNH is proposing to maintain these treed buffers.

- Paragraphs (4) and (9) of Part (E) Parking Lots of Article III – Development Standards, Section 5 requires trees distributed throughout the parking lot as evenly as practical and that a shade or ornamental tree is within 75 feet of a parking spot. Considering the proposed use of the area and the desire to limit the area of disturbance, including trees in the proposed parking areas is not practical as it would unnecessarily increase the development area. The use of large trees with tall commercial vehicles could create hazards with visibility along with tree and truck damage from passing too close. The benefit of shade from the trees is not achieved given the height of the operating cab in the hauling vehicles and that they are on route and not parked in the parking lot during the heat of the day.

- Paragraph (5) of Part (E) Parking Lots of Article III – Development Standards, Section 5 requires a landscaping peninsula at the end of each parking row. For this project, landscaped peninsulas are not proposed at the end of each parking row in the truck parking areas. The open ends of the parking rows within the truck parking areas include the CNG distribution trusses and are not conducive to supporting trees for safety reasons include personnel visibility. Landscaped peninsulas are proposed on the driveway side (northern side) of the vehicle parking area.

We trust that the above information fully addresses the City's need for a waiver request from the printing and off-street parking spaces requirements for this project. Should you require additional information, please contact me at areichert@wm.com.

Very truly yours,
WASTE MANAGEMENT OF NEW HAMPSHIRE, INC.

Anne Reichert

Anne Reichert, P.E.
Construction Project Manager

Copies to: Peter Richer, WMNH
Steve Cates, WMNH
Eric Steinhauser, Sanborn Head

ROCHESTER HAULING COMPANY FACILITY
WASTE MANAGEMENT OF NEW HAMPSHIRE, INC.

ROCHESTER, NEW HAMPSHIRE
APRIL 2018

RECEIVED
APR 10 2018
By

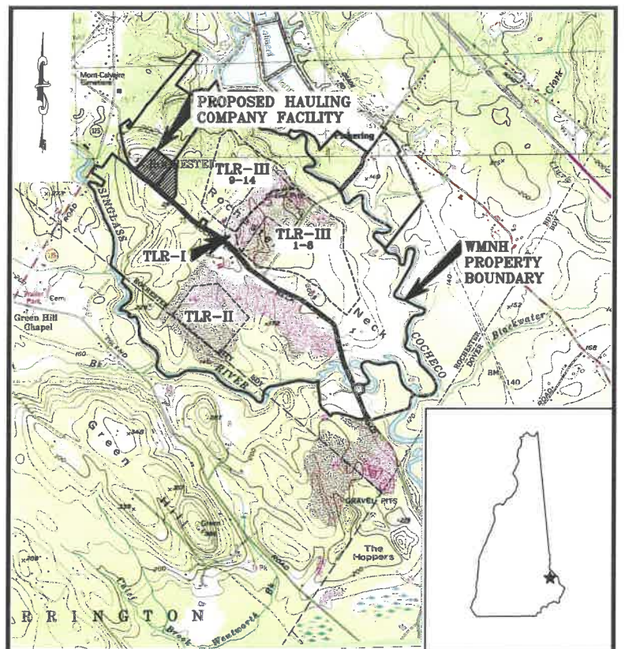

FROM: USGS TOPOGRAPHIC MAP- ROCHESTER, NEW HAMPSHIRE (PROVISIONAL 1983)

LOCUS PLAN

SCALE: 1"=2000'

SHEET INDEX

SHEET NO.	TITLE	SHEET NO.	TITLE
1	NOTES, LEGEND, AND ABBREVIATIONS	15-18	STORMWATER DETAILS
2	OVERALL SITE AND ZONING PLAN	19	FENCE DETAILS
3	EXISTING CONDITIONS AND DEMOLITION PLAN	20	LIGHTING AND RETAINING WALL DETAILS
4-5	PROPOSED SITE DEVELOPMENT PLAN	21-22	EROSION AND SEDIMENTATION CONTROL DETAILS
6	PROPOSED CIRCULATION, PARKING, AND SIGNAGE PLAN	G-1.10	CNG GENERAL ARRANGEMENT
7	PROPOSED UTILITIES PLAN	G-1.11	CNG GENERAL ARRANGEMENT - EQUIPMENT COMPOUND
8	POND 6W PLAN AND PROFILE	P-1.0	CNG TRUSS UP-FIT
9	BUILDING FLOOR PLAN	E-1.0	CNG TRUSS UP-FIT - ELECTRICAL
10-11	BUILDING ELEVATIONS	SK-1	CNG CAMERA PLAN
12-13	DETAILS	SK-2	CNG FLAME DETECTORS
14	WATER SUPPLY AND SEWER DETAILS		

FOR MORE INFORMATION ABOUT THESE PLANS, CONTACT THE CITY OF ROCHESTER PLANNING DEPARTMENT, 31 WAKEFIELD STREET, ROCHESTER, NH 03867 (603) 335-1338.

ROCHESTER PLANNING BOARD
APPROVAL CERTIFIED BY: DATE:

THE DEVELOPMENT DEPICTED IN THESE DRAWINGS MUST BE IN COMPLIANCE WITH ALL APPLICABLE LAW-INCLUDING ALL PERTINENT PROVISIONS OF THE "CITY OF ROCHESTER SITE PLAN REGULATIONS"- UNLESS OTHERWISE WAIVED.

STATE OF NEW HAMPSHIRE
ERIC SCOTT STEINHAUSER
No. 11034
LICENSED
PROFESSIONAL ENGINEER

PREPARED FOR:

WASTE MANAGEMENT

WASTE MANAGEMENT OF NEW HAMPSHIRE, INC.
ROCHESTER, NEW HAMPSHIRE

PREPARED BY:

SANBORN HEAD

20 FOUNDRY STREET, CONCORD, NEW HAMPSHIRE 03301
(603) 229-1900 FAX (603) 229-1919

© 2018 SANBORN, HEAD & ASSOCIATES, INC.

REFERENCE NOTES

1. EXISTING TOPOGRAPHY AND SITE FEATURES WERE PROVIDED TO SANBORN HEAD IN ELECTRONIC FILES TITLED, "TREE17-01.DWG" THROUGH "TREE17-12.DWG" COMPILED USING PHOTOGRAMMETRIC METHODS BY QUANTUM SPATIAL OF DULLES, VIRGINIA FOR WASTE MANAGEMENT OF NEW HAMPSHIRE, INC. (WMNH) USING AERIAL PHOTOGRAPHY DATED APRIL 23, 2017 AT AN ORIGINAL SCALE OF 1" = 100' AND CONTOUR INTERVAL OF 2 FEET. VERTICAL DATUM IS BASED ON NGVD 1929. GRID IS BASED ON NEW HAMPSHIRE STATE PLANE COORDINATE SYSTEM NAD 1983.

2. WETLAND AREAS REPRESENT A COMPILATION OF INFORMATION DETERMINED USING EXISTING AERIAL PHOTOGRAPHY, SOILS INFORMATION, U.S.F.W.S. NATIONAL WETLAND INVENTORY MAPS, AND DELINEATIONS WITHIN THE PROJECT AREA CONDUCTED IN OCTOBER AND DECEMBER 2014 AND SUPPLEMENTED WITH ADDITIONAL DELINEATIONS PERFORMED BETWEEN SEPTEMBER 2000 AND JUNE 2015 BY BARRY H. KEITH, NH CWS #087, IN ACCORDANCE WITH NHWB ADMINISTRATIVE RULE WT 301.01 (A-C) USING THE METHODS OUTLINED IN THE CORPS OF ENGINEERS WETLAND DELINEATION MANUAL, TECHNICAL REPORT Y-87-1 (JANUARY 1987) AND FIELD IDENTIFYING HYDRIC SOILS IN NEW ENGLAND (VERSION II) PUBLISHED BY THE N.E. INTERSTATE WATER POLLUTION CONTROL COMMISSION. WETLAND AREAS WERE CLASSIFIED IN ACCORDANCE WITH NHWB ADMINISTRATIVE RULE WT 301.02 USING THE USFWS/OBS-79/31 MANUAL CLASSIFICATION OF WETLANDS AND DEEPWATER HABITATS OF THE UNITED STATES (COWARDIN ET AL, 1979).

3. LIMIT OF WETLANDS PERTINENT TO THE TLR-III SOUTH AREA WERE MAPPED BY WSP TRANSPORTATION AND INFRASTRUCTURE, INC. OF NASHUA, NEW HAMPSHIRE, USING TOTAL STATION SURVEY METHODS AND PROVIDED ELECTRONICALLY ON NOVEMBER 7, 2014 AND FEBRUARY 3, 2015, AND SUPPLEMENTED WITH LIMIT OF WETLANDS PREVIOUSLY DELINEATED IN 2000 AND 2008.

4. EXISTING UTILITIES SHOWN WERE COMPILED FROM THE FOLLOWING SOURCES. LOCATIONS SHALL BE CONSIDERED APPROXIMATE. CONTRACTOR SHALL CONFIRM IN THE FIELD THE LOCATIONS OF UTILITIES WITHIN THE LIMIT OF DISTURBANCE:

   4.1. ACTUAL ON-THE-GROUND SURVEY DONE WITH A COMBINATION OF GPS RTK AND CONVENTIONAL SURVEY METHODS, CONDUCTED BY WSP ON OCTOBER 8, OCTOBER 10, OCTOBER 27, 2014, AND SEPTEMBER 22, 2015.

   4.2. A PLAN TITLED "LTP EFFLUENT FORCEMAIN ASBUILT, WASTE MANAGEMENT OF NEW HAMPSHIRE, INC., ROCHESTER, NH" PREPARED BY SUR CONSTRUCTION, INC. OF ROCHESTER, NH DATED MARCH 3, 2010.

   4.3. A PLAN TITLED " RECORD DRAWING, ROCHESTER NECK ROAD ROADWAY IMPROVEMENTS, ROCHESTER, NH" PREPARED BY GCG ASSOCIATES, INC. OF LYNNFIELD, MA DATED AUGUST 1991.

   4.4. ACTUAL ON-THE-GROUND SURVEY DONE USING GPS RTK SURVEY METHODS, CONDUCTED BY WMNH IN FALL 2017.

   4.5. HISTORICAL SKETCHES OF THE SITE PROVIDED TO SANBORN HEAD BY WMNH.

   4.6 TAYLOR AVENUE WATER LINE LOCATION DIGITIZED FROM A PLAN SET TITLED " FOREST MEADOWS SITE PLAN, ROCHESTER NECK ROAD, ROCHESTER, N.H." PREPARED BY DURGIN/SCHOFIELD ASSOCIATES, DATED MARCH 2, 1987.

5. PROPERTY LINE INFORMATION WAS TAKEN FROM A PLAN TITLED "BOUNDARY COMPILATION AND FOOTPRINT COMPILATION OF TLR-I AND TLR-III, ROCHESTER NECK ROAD, ROCHESTER, NEW HAMPSHIRE" PREPARED FOR WASTE MANAGEMENT OF NEW HAMPSHIRE, INC. BY CHAS. H. SELLS, INC. OF NASHUA, NEW HAMPSHIRE DATED JANUARY 29, 2002 AT A SCALE OF 1" = 300'. ALL OTHER PROPERTY LINE INFORMATION WAS OBTAINED FROM ELECTRONIC (AUTOCAD) TAX MAP FILES CREATED BY CAI TECHNOLOGIES OF LITTLETON, NEW HAMPSHIRE.

6. ZONING INFORMATION IS BASED ON THE CITY OF ROCHESTER, NH ZONING MAP PREPARED BY NORWAY PLAINS ASSOCIATES, INC. OF ROCHESTER, NEW HAMPSHIRE, ADOPTED APRIL 14, 2014.

7. THE 100-YEAR FLOODPLAIN IS BASED ON INFORMATION PROVIDED ON THE FEDERAL EMERGENCY MANAGEMENT AGENCY (FEMA) "FLOOD INSURANCE RATE MAP, STRAFFORD COUNTY, NEW HAMPSHIRE" PANEL 302 OF 405, EFFECTIVE DATE SEPTEMBER 30, 2015.

MATERIAL SPECIFICATIONS

1. ORDINARY FILL SHALL BE NATURAL SOIL WITH NO PARTICLES LARGER THAN 8 INCHES.
2. GRANULAR FILL SHALL BE NATURAL SOIL WITH NO PARTICLES LARGER THAN 1 INCH.
3. UNLESS OTHERWISE NOTED ON THE DRAWINGS, CRUSHED STONE SHALL HAVE A MAXIMUM PARTICLE SIZE OF 1-1/2 INCHES.
4. TYPE I RIPRAP SHALL CONSIST OF STONE RANGING IN SIZE FROM 4 TO 10 INCHES.
5. TYPE II RIPRAP SHALL CONSIST OF STONE RANGING IN SIZE FROM 6 TO 8 INCHES.
6. GRANULAR BEDDING SAND SHALL BE A WELL GRADED SAND WITH NO PARTICLES LARGER THAN 1 INCH.
7. CRUSHED GRAVEL SHALL CONSIST OF UNIFORMLY MIXED CRUSHED STONE AND COARSE SAND WITH NO PARTICLES LARGER THAN 2 INCHES.

ABBREVIATIONS

Ø	DIAMETER	MIN.	MINIMUM
A, ASPH	ASPHALT	MW	MONITORING WELL
AST	ABOVE-GROUND STORAGE TANK	N	NORTHING
CB	CATCH BASIN	O.C.	ON CENTER
CFM	CUBIC FEET PER MINUTE	OD	OUTER DIAMETER
CONC.	CONCRETE	PC	PERIMETER CHANNEL
CMP	CORRUGATED METAL PIPE	PE	POLYETHYLENE
CPP	CORRUGATED POLYETHYLENE PIPE	PROJ.	PROJECTING
CW	CHANNEL WIDTH	PT	POINT OF TANGENCY
DI	DROP INLET	PVC	POLYVINYL CHLORIDE
DMH	DRAIN MANHOLE	RCP	REINFORCED CONCRETE PIPE
E	EASTING	RMC	RIGID METAL CONDUIT
EL.	ELEVATION	SCH	SCHEDULE
ENDWL	ENDWALL	SDR	STANDARD DIMENSION RATIO
FES	FLARED END SECTION	SS	STAINLESS STEEL
GP	GAS PROBE	TP	TEST PIT
HDPE	HIGH DENSITY POLYETHYLENE	TLR	TURNKEY LANDFILL OF ROCHESTER
HDWL	HEAD WALL	TRANS	TRANSFORMER
HP	HIGH POINT, HORSEPOWER	TYP	TYPICAL
INV.	INVERT	UST	UNDER-GROUND STORAGE TANK
MAX.	MAXIMUM	W	WELL, GAS WELL
MC	METAL COVER	WD	WOOD
MH	MANHOLE		

LEGEND

EXISTING CONDITIONS

- TOWN LINE
- PROPERTY LINE
- LOT LINE
- RECYCLING INDUSTRIAL ZONING BOUNDARY
- LIMIT OF WASTE CONTAINMENT
- TLR-I LIMIT OF WASTE CONTAINMENT
- 2-FOOT ELEVATION CONTOUR
- 180 — 10-FOOT ELEVATION CONTOUR
- EDGE OF ROAD
- UNPAVED ROAD
- LIMIT OF WETLANDS
- EDGE OF WATER
- LIMIT OF 100-YEAR FLOODPLAIN
- FM — FORCE MAIN
- S — SEWER
- W — WATER MAIN
- NG — NATURAL GAS
- E — ELECTRIC
- OU — OVERHEAD UTILITIES
- X — FENCE
- TREE LINE
- GUARDRAIL
- EXISTING SWALE & FLOW DIRECTION
- DRAINAGE CULVERT
- PAVEMENT
- WETLAND AREA
- NATURAL WETLAND BUFFER AREA
- RIPRAP-LINED SWALE
- GABION-LINED SWALE
- 100 YEAR FLOOD PLAIN
- UTILITY POLE
- POST
- MISC. OBJECT
- SIGN
- LIGHT POST
- TREE/BUSH
- HC-12 — TEST PIT LOCATION AND DESIGNATION
- CATCH BASIN
- SEWER MANHOLE
- FIRE HYDRANT

PROPOSED CONDITIONS

- 182 — 2-FOOT ELEVATION CONTOUR
- 180 — 10-FOOT ELEVATION CONTOUR
- LIMIT OF DISTURBANCE
- SWALE & FLOW DIRECTION
- FILTER LOGS
- GUARDRAIL
- X — FENCE
- OE — OVERHEAD ELECTRIC
- UE — UNDERGROUND ELECTRIC
- GAS — NATURAL GAS PIPELINE
- EDGE OF ROAD
- TREE LINE
- DRAINAGE CULVERT
- C-1 — DRAINAGE CULVERT DESIGNATION
- RIPRAP
- CONCRETE
- VEGETATED STORMWATER FEATURE
- HEAVY DUTY PAVEMENT
- LIGHT DUTY PAVEMENT
- CONCRETE PAD
- ROOF AREA
- N 272000 E 1170000 — COORDINATES
- 213.50 — SPOT ELEVATION
- HP — HIGH POINT
- UTILITY POLE
- TRAFFIC FLOW ARROW
- CB-05 — CATCH BASIN AND DESIGNATION
- BOLLARD
- 14 — PARKING SPACE TOTAL

FOR MORE INFORMATION ABOUT THESE PLANS, CONTACT THE CITY OF ROCHESTER PLANNING DEPARTMENT, 31 WAKEFIELD STREET, ROCHESTER, NH 03867 (603) 335-1338.

ROCHESTER PLANNING BOARD
APPROVAL CERTIFIED BY: DATE:

SANBORN HEAD

SCALE: AS NOTED

STATE OF NEW HAMPSHIRE — ERIC SCOTT STEINHAUSER No. 11460 — LICENSED PROFESSIONAL ENGINEER

NO.	DATE	DESCRIPTION	BY

DRAWN BY: A. MATTHEWS / D. LONG
DESIGNED BY: A. MATTHEWS / K. ANDERSON
REVIEWED BY: K. ANDERSON
PROJECT MGR: T. REED
PIC: E. STEINHAUSER
DATE: APRIL 2018

ROCHESTER HAULING COMPANY FACILITY
WASTE MANAGEMENT OF NEW HAMPSHIRE, INC.
ROCHESTER, NEW HAMPSHIRE

NOTES, LEGEND, AND ABBREVIATIONS

PROJECT NUMBER: 4292.00

SHEET NUMBER: 1 OF 22

© 2018 SANBORN, HEAD & ASSOCIATES, INC.

PLAN REFERENCE NOTES:

1. REFER TO SHEET 1 FOR ADDITIONAL NOTES AND LEGEND INFORMATION.

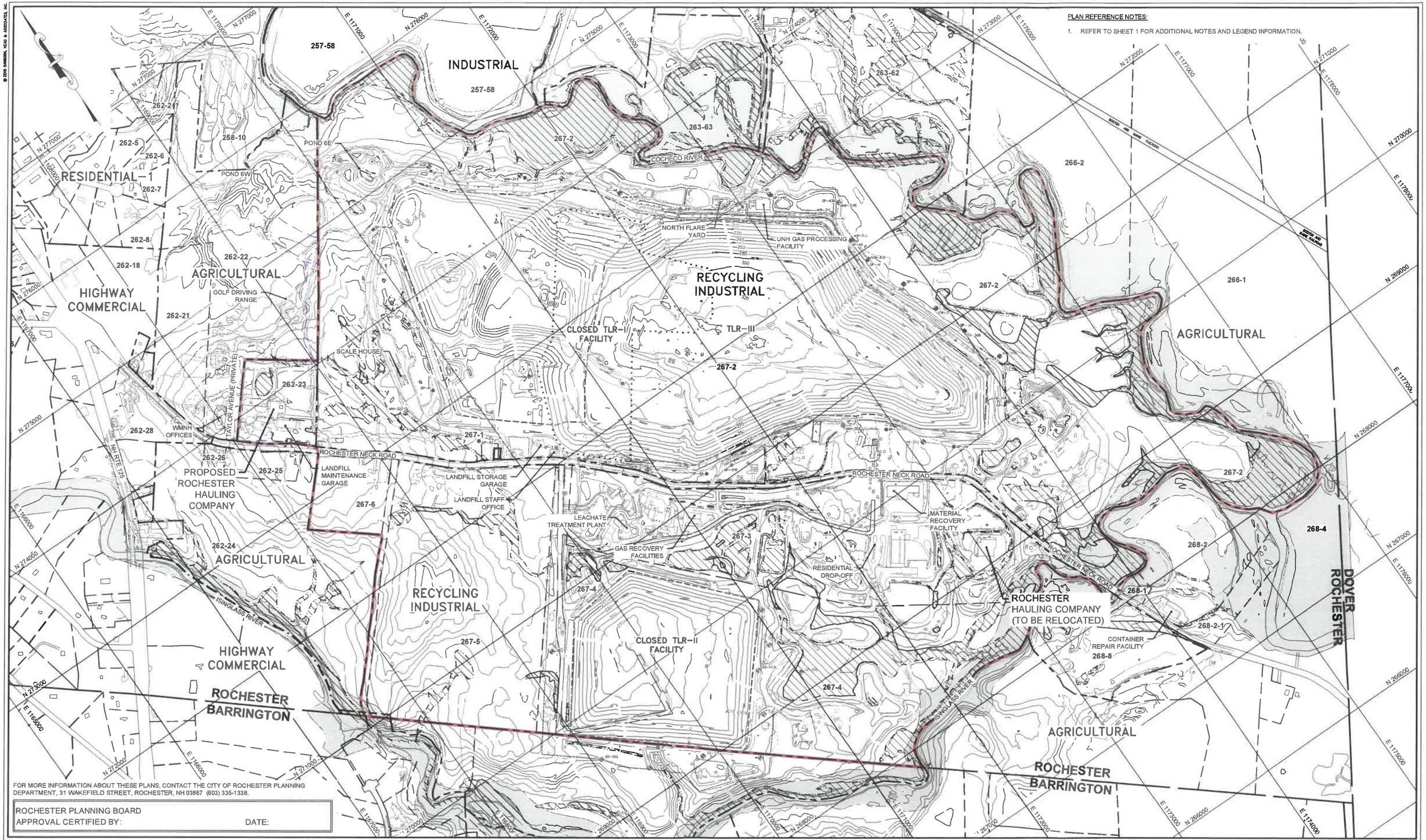

FOR MORE INFORMATION ABOUT THESE PLANS, CONTACT THE CITY OF ROCHESTER PLANNING DEPARTMENT, 31 WAKEFIELD STREET, ROCHESTER, NH 03867 (603) 335-1338.

ROCHESTER PLANNING BOARD
APPROVAL CERTIFIED BY: DATE:

SANBORN | HEAD

GRAPHICAL SCALE
400' 200' 0' 400' 800'

STATE OF NEW HAMPSHIRE ERIC SCOTT STEINHAUSER No. 15464 LICENSED PROFESSIONAL ENGINEER

NO.	DATE	DESCRIPTION	BY

DRAWN BY: A. MATTHEWS
DESIGNED BY: T. REED
REVIEWED BY: K. ANDERSON
PROJECT MGR: T. REED
PIC: E. STEINHAUSER
DATE: APRIL 2018

ROCHESTER HAULING COMPANY FACILITY
WASTE MANAGEMENT OF NEW HAMPSHIRE, INC.
ROCHESTER, NEW HAMPSHIRE

OVERALL SITE AND ZONING PLAN

PROJECT NUMBER: 4292.00

SHEET NUMBER: 2 OF 22

FOR MORE INFORMATION ABOUT THESE PLANS, CONTACT THE CITY OF ROCHESTER PLANNING DEPARTMENT, 31 WAKEFIELD STREET, ROCHESTER, NH 03867 (603) 335-1338.

ROCHESTER PLANNING BOARD
APPROVAL CERTIFIED BY: DATE:

PLAN REFERENCE NOTES:

1. REFER TO SHEET 1 FOR ADDITIONAL NOTES AND LEGEND INFORMATION.
2. THE 0.02 ACRE WETLAND IMPACT SHOWN ON THIS PLAN WAS APPROVED BY THE CITY OF ROCHESTER CONSERVATION COMMISSION ON JANUARY 24, 2018 AS PART OF THE TLR-III SOUTH AREA STANDARD WETLAND IMPACT PERMIT APPLICATION APPROVAL.
3. THE EXISTING UTILITIES SHOWN REPRESENT A COMPILATION OF INFORMATION PROVIDED TO SANBORN HEAD AND IS NOT INCLUSIVE OF ALL ABOVE AND BELOW GRADE UTILITIES INSTALLED AT THE SITE. LOCATIONS OF UTILITIES SHOULD BE CONSIDERED APPROXIMATE AND SHOULD BE FIELD VERIFIED.
4. LOCATIONS AND ELEVATIONS OF EXISTING WATER AND SEWER LINES TO REMAIN TO BE FIELD VERIFIED BY THE CONTRACTOR PRIOR TO CONSTRUCTION. IN THE EVENT THAT THESE LINES NEED TO BE REPLACED DUE TO INADEQUATE COVER AND/OR UTILITY CROSSING CONFLICTS, THEY SHALL BE REPLACED, IN KIND, IN ACCORDANCE WITH THE TOWN OF ROCHESTER, NH SITE PLAN REGULATIONS.

SANBORN HEAD

GRAPHICAL SCALE
50' 25' 0' 50' 100'

STATE OF NEW HAMPSHIRE ERIC SCOTT STEINHAUSER No. 11456 LICENSED PROFESSIONAL ENGINEER

NO.	DATE	DESCRIPTION	BY

DRAWN BY: A. MATTHEWS / D. LONG
DESIGNED BY: A. MATTHEWS / D. LONG
REVIEWED BY: K. ANDERSON
PROJECT MGR: T. REED
PIC: E. STEINHAUSER
DATE: APRIL 2018

ROCHESTER HAULING COMPANY FACILITY
WASTE MANAGEMENT OF NEW HAMPSHIRE, INC.
ROCHESTER, NEW HAMPSHIRE

EXISTING CONDITIONS AND DEMOLITION PLAN

PROJECT NUMBER: 4292.00

SHEET NUMBER: 3 OF 22

© 2018 SANBORN, HEAD & ASSOCIATES, INC.

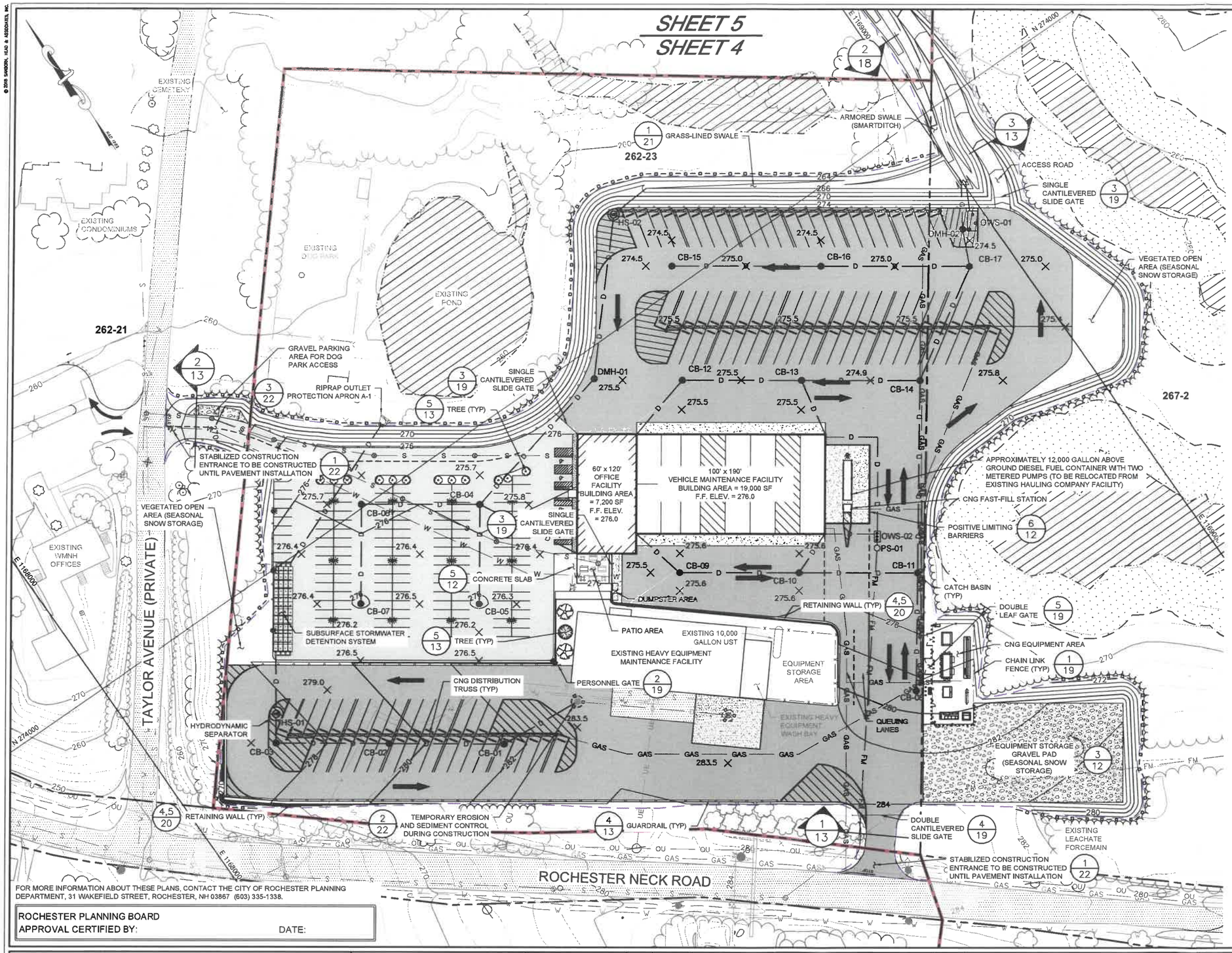

FOR MORE INFORMATION ABOUT THESE PLANS, CONTACT THE CITY OF ROCHESTER PLANNING DEPARTMENT, 31 WAKEFIELD STREET, ROCHESTER, NH 03867 (603) 335-1338.

ROCHESTER PLANNING BOARD
APPROVAL CERTIFIED BY: DATE:

PLAN REFERENCE NOTES:

1. REFER TO SHEET 1 FOR ADDITIONAL NOTES AND LEGEND INFORMATION.
2. PLAN DOES NOT REPRESENT LOCATION OF ALL UTILITIES FOR CLARITY. REFER TO SHEET 7 FOR ADDITIONAL UTILITY LOCATION INFORMATION.
3. CNG EQUIPMENT, DISTRIBUTION, AND TRUSS SYSTEM LOCATIONS PROVIDED BY T. MITCHELL ENGINEERS, INC. OF SAN LEANDRO, CALIFORNIA TO SANBORN HEAD IN DIGITAL FORMAT. REFER TO SHEETS G-1.10 AND G-1.11 FOR ADDITIONAL INFORMATION.

SANBORN HEAD

GRAPHICAL SCALE
50' 25' 0' 50' 100'

STATE OF NEW HAMPSHIRE
590
SCOTT STEINHAUSER
No. 11460
LICENSED
PROFESSIONAL ENGINEER

NO.	DATE	DESCRIPTION	BY

DRAWN BY: A. MATTHEWS / D. LONG
DESIGNED BY: E. GALVIN / D. LONG
REVIEWED BY: K. ANDERSON
PROJECT MGR: T. REED
PIC: E. STEINHAUSER
DATE: APRIL 2018

ROCHESTER HAULING COMPANY FACILITY
WASTE MANAGEMENT OF NEW HAMPSHIRE, INC.
ROCHESTER, NEW HAMPSHIRE

PROPOSED SITE DEVELOPMENT PLAN

PROJECT NUMBER: 4292.00

SHEET NUMBER: 4 OF 22

© 2018 SANBORN, HEAD & ASSOCIATES, INC.

© 2018 SANBORN, HEAD & ASSOCIATES, INC.

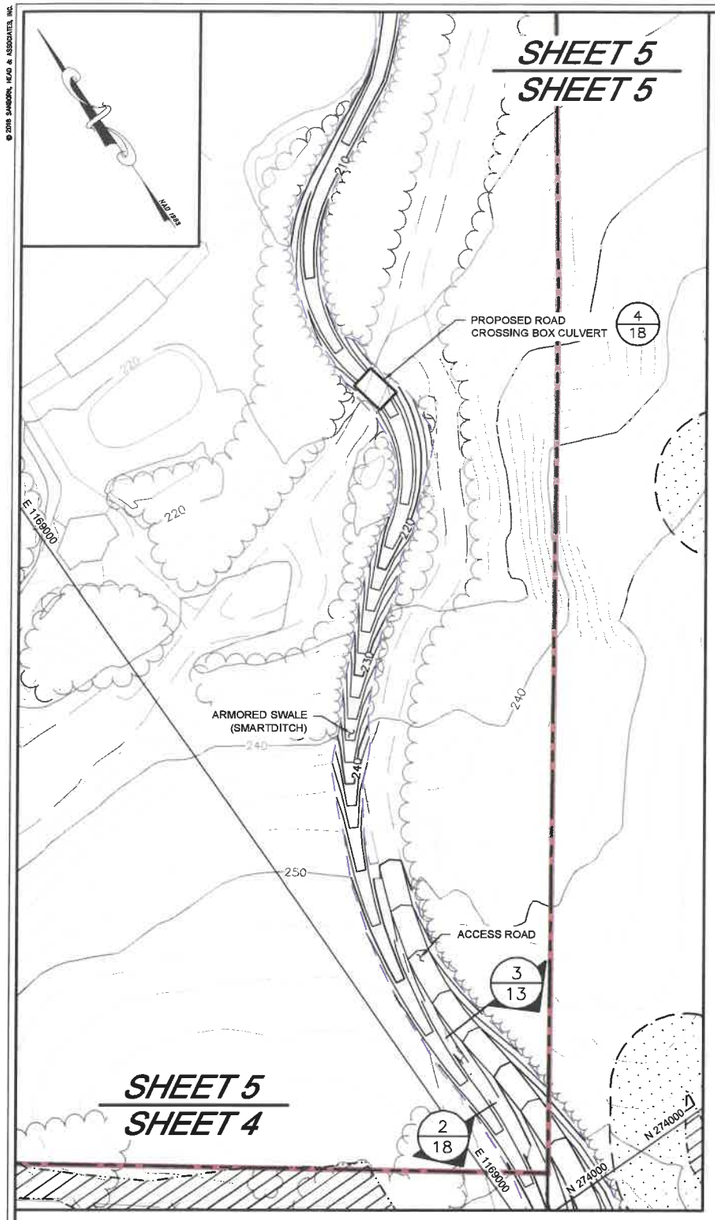

PROPOSED DEVELOPMENT PLAN

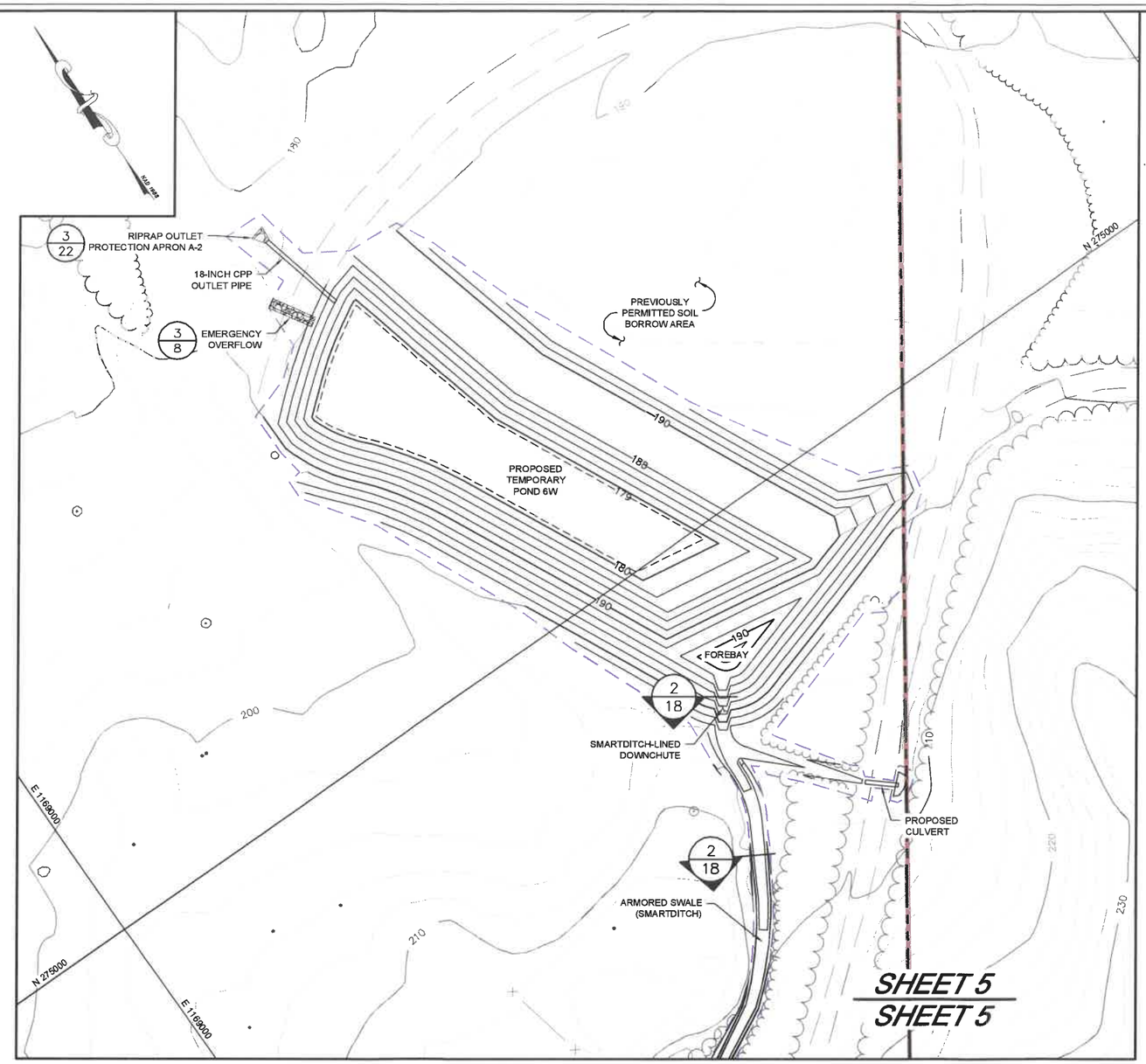

PROPOSED DEVELOPMENT PLAN

PLAN REFERENCE NOTES:

1. SEE SHEET 1 FOR ADDITIONAL NOTES AND LEGEND INFORMATION.

FOR MORE INFORMATION ABOUT THESE PLANS, CONTACT THE CITY OF ROCHESTER PLANNING DEPARTMENT, 31 WAKEFIELD STREET, ROCHESTER, NH 03867 (603) 335-1338.

ROCHESTER PLANNING BOARD
APPROVAL CERTIFIED BY: DATE:

SANBORN HEAD

GRAPHICAL SCALE
50' 25' 0' 50' 100'

STATE OF NEW HAMPSHIRE ERIC SCOTT STEINHAUSER No. 11460 LICENSED PROFESSIONAL ENGINEER

NO.	DATE	DESCRIPTION	BY

DRAWN BY: A. MATTHEWS / D. LONG
DESIGNED BY: E. GALVIN / D. LONG
REVIEWED BY: K. ANDERSON
PROJECT MGR: T. REED
PIC: E. STEINHAUSER
DATE: APRIL 2018

ROCHESTER HAULING COMPANY FACILITY
WASTE MANAGEMENT OF NEW HAMPSHIRE, INC.
ROCHESTER, NEW HAMPSHIRE

PROPOSED SITE DEVELOPMENT PLAN

PROJECT NUMBER: 4292.00

SHEET NUMBER: 5 OF 22

PLAN REFERENCE NOTES:

1. REFER TO SHEET 1 FOR ADDITIONAL NOTES AND LEGEND INFORMATION.

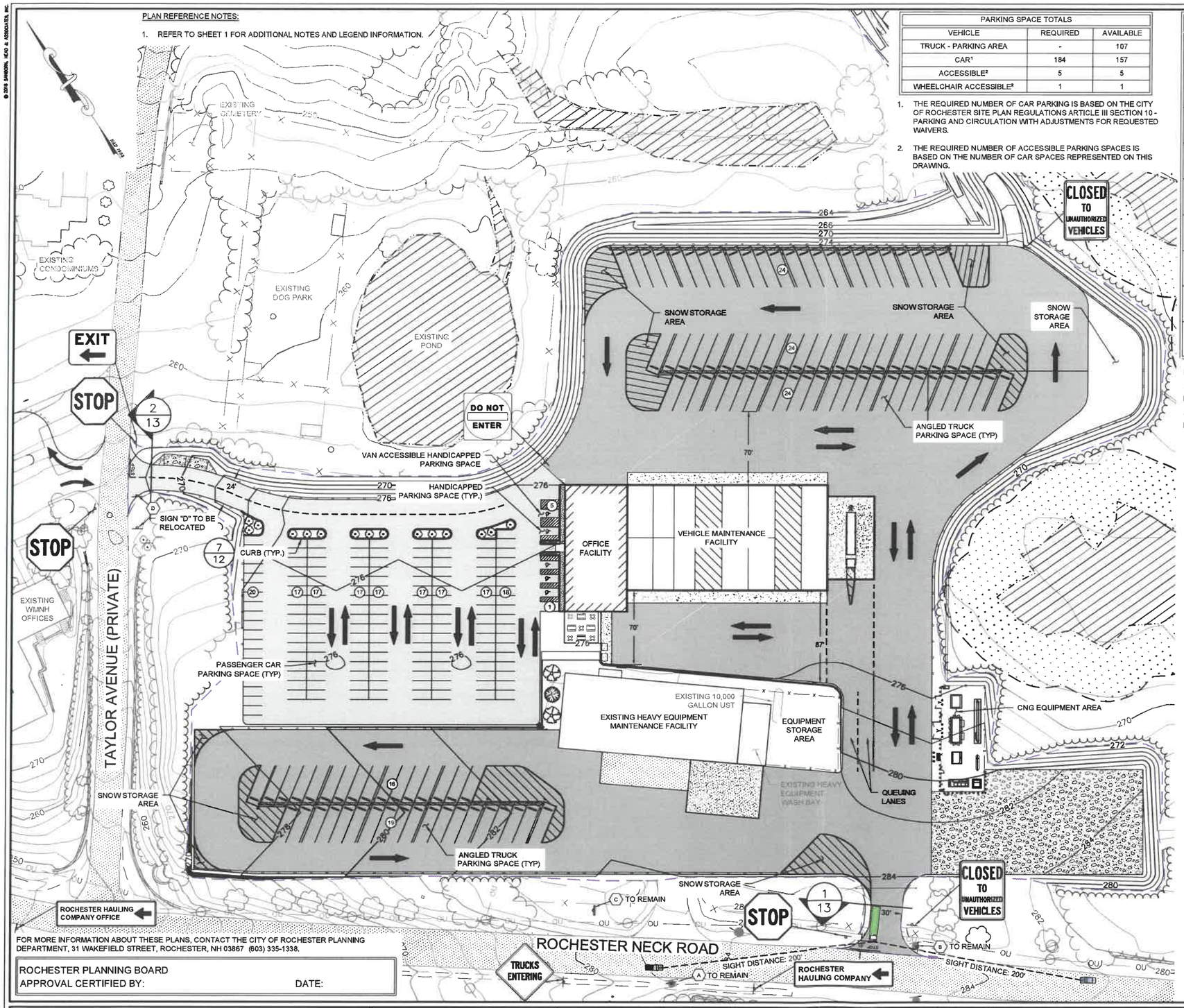

FOR MORE INFORMATION ABOUT THESE PLANS, CONTACT THE CITY OF ROCHESTER PLANNING DEPARTMENT, 31 WAKEFIELD STREET, ROCHESTER, NH 03867 (603) 335-1338.

ROCHESTER PLANNING BOARD
APPROVAL CERTIFIED BY: DATE:

PARKING SPACE TOTALS		
VEHICLE	REQUIRED	AVAILABLE
TRUCK - PARKING AREA	-	107
CAR[1]	184	157
ACCESSIBLE[2]	5	5
WHEELCHAIR ACCESSIBLE[3]	1	1

1. THE REQUIRED NUMBER OF CAR PARKING IS BASED ON THE CITY OF ROCHESTER SITE PLAN REGULATIONS ARTICLE III SECTION 10 - PARKING AND CIRCULATION WITH ADJUSTMENTS FOR REQUESTED WAIVERS.
2. THE REQUIRED NUMBER OF ACCESSIBLE PARKING SPACES IS BASED ON THE NUMBER OF CAR SPACES REPRESENTED ON THIS DRAWING.

NEW SIGNAGE SCHEDULE								
MUTCD ID NUMBER	NUMBER OF SIGNS REQUIRED	WIDTH (INCHES)	HEIGHT (INCHES)	TEXT	LETTER HEIGHT (INCHES)	ARROW LENGTH (INCHES)	VERTICAL DISTANCE BETWEEN ROAD SURAFCE AND BOTTOM OF SIGN (FT)	NUMBER OF POSTS
R1-1	3	30	30	STOP	10C	—	5**	1
R-5-1	1	30	30	DO NOT ENTER	4D	—	5	1
W14-B3	1	36	36	TRUCKS ENTERING	6D	—	5**	1
R5-10B1	2	18	24	CLOSED TO VEHICLES	4D	—	5	1
—	1	48	12	ROCHESTER HAULING COMPANY ←	4D	—	5	1
—	1	48	12	ROCHESTER HAULING COMPANY OFFICE ←	4D	—	5	1
—	1	24	12	EXIT ←	4D	12*	5**	1

NOTES:

* ARROW DESIGN SHALL CONFORM TO THE DETAILS DIMENSIONS PROVIDED IN THE "STANDARD HIGHWAY SIGN MANUAL," 2004 EDITION, PAGE 6-2, FOR A 2.5-INCH WIDE ARROW SHAFT.

** WHEN SIGNS SHARE A SUPPORT, INSTALL SIGNS SUCH THAT THERE IS NO GAP BETWEEN SIGNS, AND THE VERTICAL DISTANCE RELATES TO THE TOP SIGN.

EXISTING SIGN INFORMATION		
SIGN DESIGNATION:	DIMENSIONS:	DESCRIPTION:
SIGN "A"	36" X 36"	"LANE ENDS MERGE LEFT"
SIGN "B"	36" X 36"	"STEEP GRADE CAUTION"
SIGN "C"	8' X 6' WIDE	"LARGE SIGN AT ENTRANCE"
SIGN "D"	36" X 36" & 12" X 48" WIDE (APPROX.)	"GOLF RANGE"

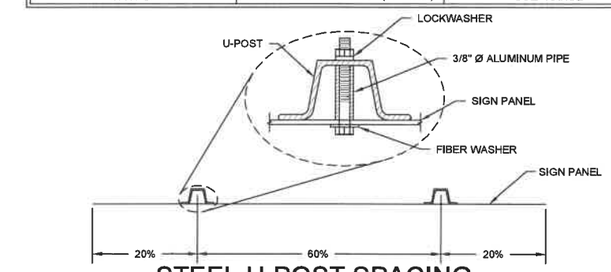

STEEL U-POST SPACING

NOT TO SCALE

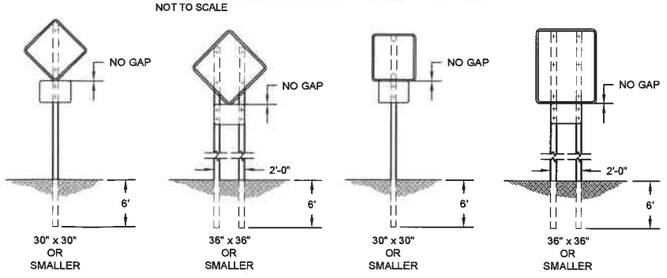

SIGN VERTICAL DIMENSION DETAIL

NOT TO SCALE

SANBORN HEAD

GRAPHICAL SCALE
50' 25' 0' 50' 100'

STATE OF NEW HAMPSHIRE ERIC SCOTT STEINHAUSER No. 11452 LICENSED PROFESSIONAL ENGINEER

NO.	DATE	DESCRIPTION	BY

DRAWN BY: A. MATTHEWS / D. LONG
DESIGNED BY: A. MATTHEWS / D. LONG
REVIEWED BY: K. ANDERSON
PROJECT MGR: T. REED
PIC: E. STEINHAUSER
DATE: APRIL 2018

ROCHESTER HAULING COMPANY FACILITY
WASTE MANAGEMENT OF NEW HAMPSHIRE, INC.
ROCHESTER, NEW HAMPSHIRE

PROPOSED CIRCULATION, PARKING, AND SIGNAGE PLAN

PROJECT NUMBER: 4292.00

SHEET NUMBER: 6 OF 22

© 2018 SANBORN, HEAD & ASSOCIATES, INC.

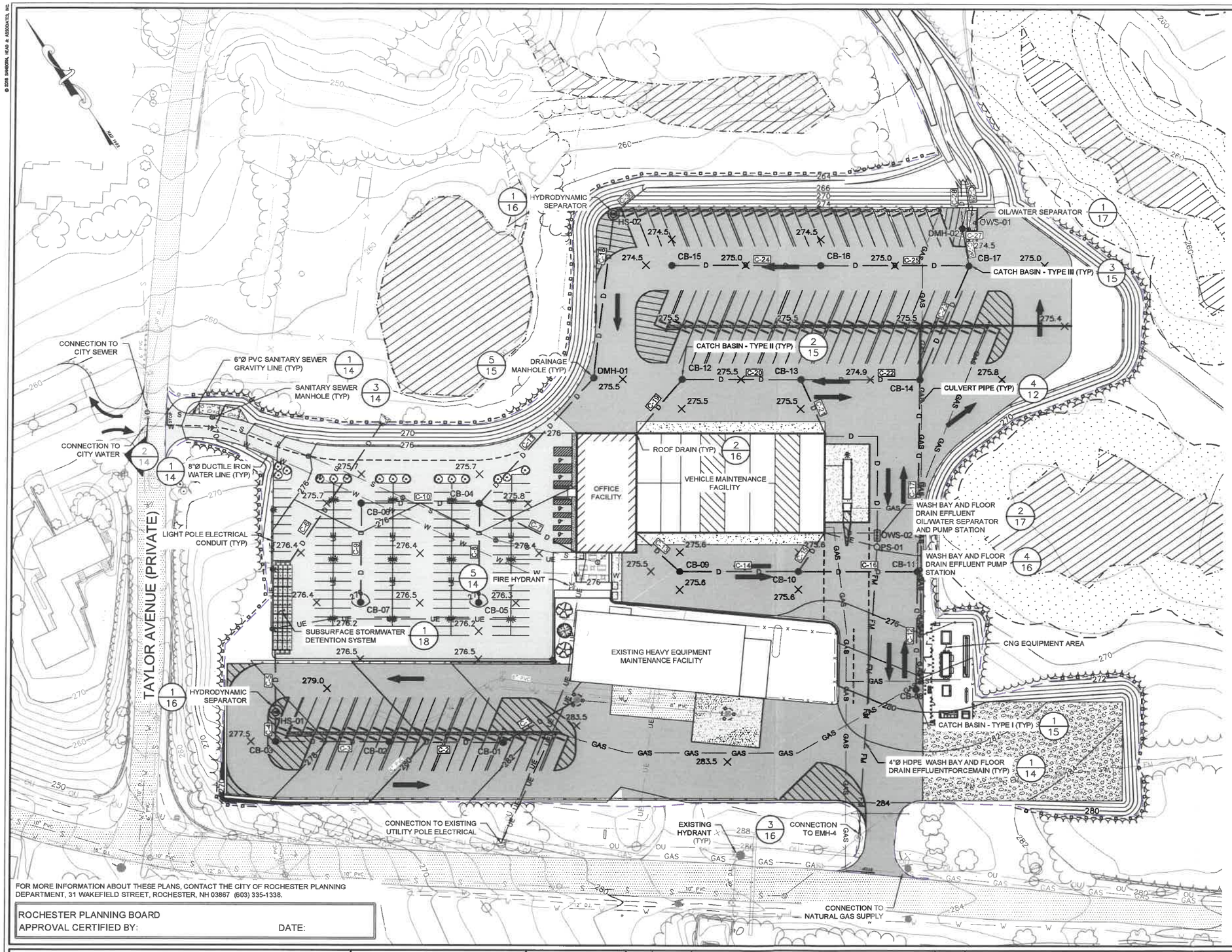

FOR MORE INFORMATION ABOUT THESE PLANS, CONTACT THE CITY OF ROCHESTER PLANNING DEPARTMENT, 31 WAKEFIELD STREET, ROCHESTER, NH 03867 (603) 335-1338.

ROCHESTER PLANNING BOARD
APPROVAL CERTIFIED BY: DATE:

PLAN REFERENCE NOTES:

1. REFER TO SHEET 1 FOR ADDITIONAL NOTES AND LEGEND INFORMATION.
2. LOCATIONS OF UTILITIES SHOWN ARE CONCEPTUAL. DESIGNING LOCATIONS FOR UTILITIES AND COORDINATING UTILITY CROSSINGS ARE THE RESPONSIBILITY OF THE DESIGN BUILD ENGINEER.
2. DISTRIBUTION, SIGNAL, AND ELECTRICAL UTILITIES FOR CNG EQUIPMENT TO BE DESIGNED BY CNG DESIGNER.

SANBORN HEAD

GRAPHICAL SCALE
50' 25' 0' 50' 100'

STATE OF NEW HAMPSHIRE
ERIC SCOTT STEINHAUSER
No. 11460
LICENSED PROFESSIONAL ENGINEER

NO.	DATE	DESCRIPTION	BY

DRAWN BY: A. MATTHEWS / D. LONG
DESIGNED BY: A. MATTHEWS / D. LONG
REVIEWED BY: K. ANDERSON
PROJECT MGR: T. REED
PIC: E. STEINHAUSER
DATE: APRIL 2018

ROCHESTER HAULING COMPANY FACILITY
WASTE MANAGEMENT OF NEW HAMPSHIRE, INC.
ROCHESTER, NEW HAMPSHIRE

PROJECT NUMBER: 4292.00

PROPOSED UTILITIES PLAN

SHEET NUMBER: 7 OF 22

© 2018 SANBORN, HEAD & ASSOCIATES, INC.

© 2018 SANBORN, HEAD & ASSOCIATES, INC.

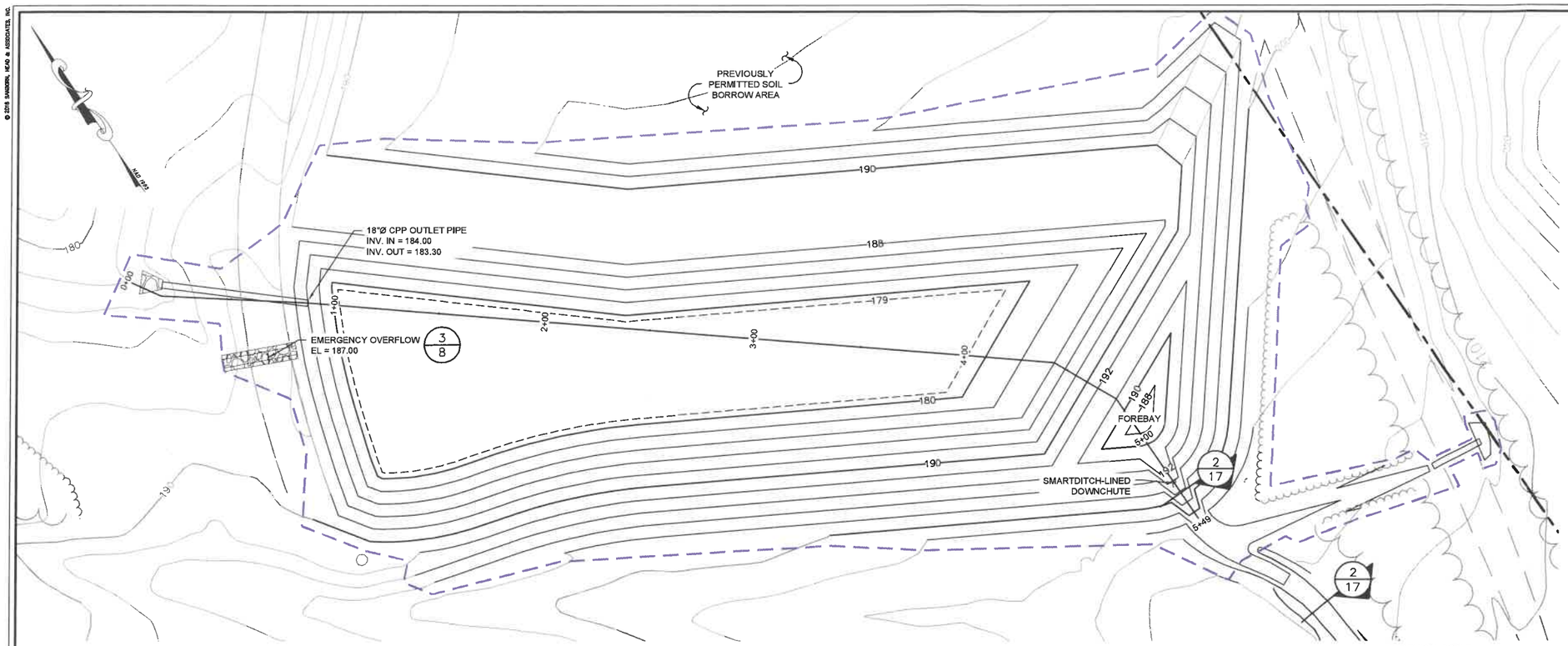

TEMPORARY POND 6W PLAN

1

SCALE AS NOTED

PLAN REFERENCE NOTES:

1. REFER TO SHEET 1 FOR ADDITIONAL NOTES AND LEGEND INFORMATION.

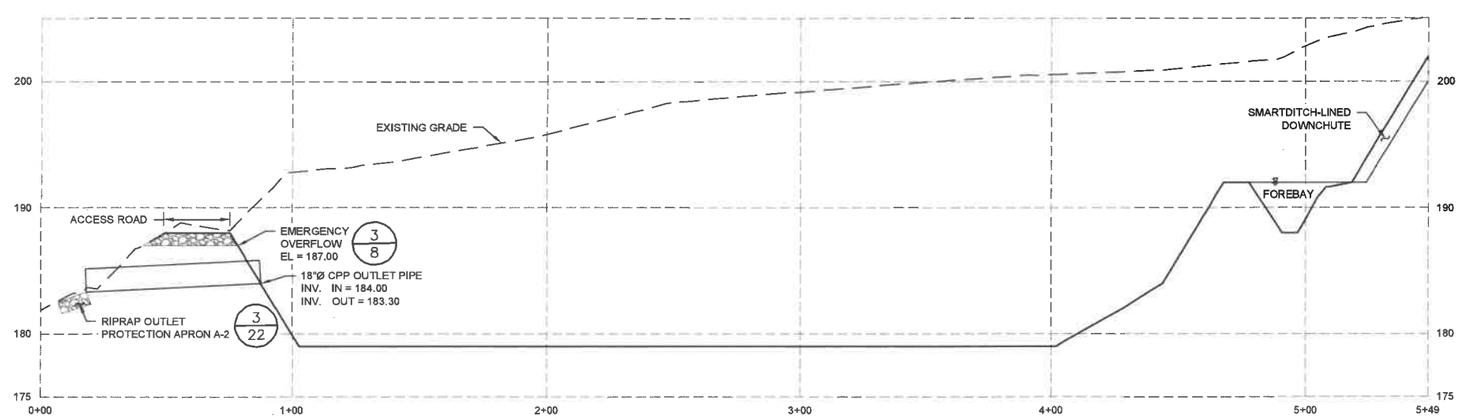

TEMPORARY POND 6W PROFILE

2

SCALE AS NOTED

VERTICAL SCALE
6.0' 3.0' 0' 6.0' 12.0'
30' 15' 0' 30' 60'
HORIZONTAL SCALE

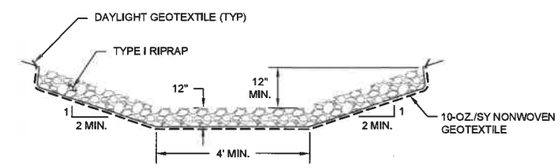

EMERGENCY OVERFLOW

3

NOT TO SCALE

NOTE:

1. IN ACCORDANCE WITH THE PREVIOUSLY PERMITTED BORROW AREA 6W, TEMPORARY POND 6W WILL ALSO INFILTRATE STORMWATER DETAINED BELOW THE OUTLET PIPE ELEVATION.

FOR MORE INFORMATION ABOUT THESE PLANS, CONTACT THE CITY OF ROCHESTER PLANNING DEPARTMENT, 31 WAKEFIELD STREET, ROCHESTER, NH 03867 (603) 335-1338.

ROCHESTER PLANNING BOARD
APPROVAL CERTIFIED BY: DATE:

SANBORN HEAD

SCALE: AS NOTED

STATE OF NEW HAMPSHIRE
ERIC SCOTT STEINHAUSER
No. 11462
LICENSED
PROFESSIONAL ENGINEER

NO.	DATE	DESCRIPTION	BY

DRAWN BY: D. LONG
DESIGNED BY: D. LONG
REVIEWED BY: K. ANDERSON
PROJECT MGR: T. REED
PIC: E. STEINHAUSER
DATE: APRIL 2018

ROCHESTER HAULING COMPANY FACILITY
WASTE MANAGEMENT OF NEW HAMPSHIRE, INC.
ROCHESTER, NEW HAMPSHIRE

POND 6W PLAN AND PROFILE

PROJECT NUMBER: 4292.00

SHEET NUMBER: 8 OF 22

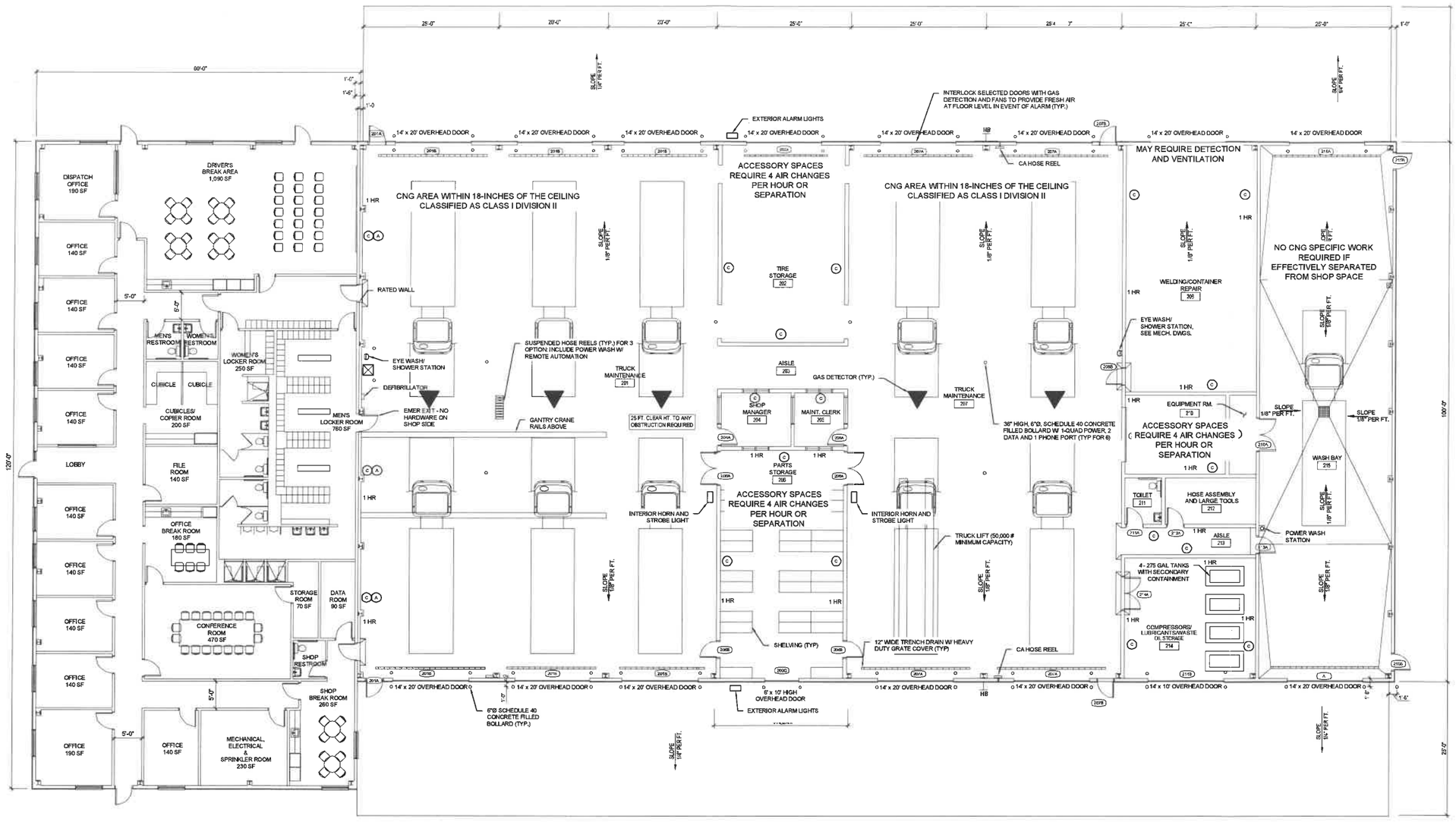

1 FLOOR PLAN

NOT TO SCALE

REFERENCE NOTES:

1. VEHICLE MAINTENANCE FACILITY FLOOR PLAN FROM THE WASTE MANAGEMENT HAULING FACILITY GUIDANCE DOCUMENT DATED DECEMBER 21, 2010 FOR A LARGE HAULING FACILITY.
2. OFFICE FLOOR PLAN DESIGNED BY H.L. TURNER GROUP INC. OF CONCORD, NEW HAMPSHIRE AND PROVIDED TO SANBORN HEAD IN DIGITAL FORMAT.
3. GENERAL BUILDING INTERIOR SHOWN. ACTUAL INTERIOR DESIGN TO BE DEVELOPED BY AN ARCHITECT DURING THE DESIGN BUILD PROCESS.
4. PROVIDE ONE (1) HR FIRE SEPARATION BETWEEN OFFICE AND SHOP AREAS.
5. DUE TO OWNERS INTEREST IN SUSTAINABILITY (LEED CERTIFICATION), DESIGN PROFESSIONAL TO PROVIDE ADDITIONAL FEE AMOUNT TO INCORPORATE SUSTAINABLE DESIGN FEATURES FOR THE BUILDING AND SITE
6. CNG SAFETY AND DETECTION INFORMATION PREPARED BY T. MITCHELL ENGINEERS, INC. OF SAN LEANDRO, CALIFORNIA AND PROVIDED TO SANBORN HEAD.

PARTITION TYPES:

(A) ONE LAYER 5/8" GYPSUM BOARD EACH SIDE OF 3 5/8", 25 GA, METAL STUDS AT 16" O.C. EXTEND GYPSUM BOARD TO DECK ABOVE. MINIMUM SOUND TRANSMISSION CLASS (STC) RATING TO BE 50. PROVIDE 5/8" CEMENT BOARD WITH 1/8" PLASTER SKIM COAT AT WET AREAS.

(B) SAME AS TYPE 'A' EXCEPT NO STC RATING REQUIRED. TERMINATE GYPSUM BOARD AT 6" ABOVE FINISHED CEILING.

(C) 8" CMU TO 72" AFF WITH TYPE 'A' PARTITION ABOVE EXCEPT WITH 6", 20 GA, METAL STUDS AND NO STC RATING REQUIRED. PROVIDE 5/8" CEMENT BOARD WITH 1/8" PLASTER SKIM COAT AT WET AREAS.

CNG NOTES (FROM T. MICHELL ENGINEERS, INC):

1. SHOP HEAT MUST HAVE NO OPEN FLAME. EXPOSED SURFACE TEMPERATURES SHALL NOT EXCEED 750°F.
2. EXHAUST FANS REQUIRED NEAR HIGHEST POINT OF CEILING SIZED FOR A MINIMUM OF 5 AIR CHANGES PER HOUR. EXHAUST FANS WILL BE CONTROLLED BY DETECTION SYSTEM WITH MANUAL ON FOR SUPPLEMENTAL SUMMER VENTILATION.
3. REQUIRED IMPROVEMENTS ARE IN ADDITION TO THOSE TYPICALLY REQUIRED FOR LIQUID FUELS.
4. OFFICE AREA HVAC MUST BE COMPLETELY SEPARATE FROM SHOP HVAC AND CONFIGURED TO HAVE SLIGHT POSITIVE PRESSURE RELATIVE TO THE SHOP.

FOR MORE INFORMATION ABOUT THESE PLANS, CONTACT THE CITY OF ROCHESTER PLANNING DEPARTMENT, 31 WAKEFIELD STREET, ROCHESTER, NH 03867 (603) 335-1338.

ROCHESTER PLANNING BOARD
APPROVAL CERTIFIED BY: DATE:

SANBORN HEAD

SCALE: AS NOTED

STATE OF NEW HAMPSHIRE ERIC SCOTT STEINHAUSER No. 11452 LICENSED PROFESSIONAL ENGINEER

NO.	DATE	DESCRIPTION	BY

DRAWN BY: A. MATTHEWS / D. LONG
DESIGNED BY: A. MATTHEWS / D. LONG
REVIEWED BY: K. ANDERSON
PROJECT MGR: T. REED
PIC: E. STEINHAUSER
DATE: APRIL 2018

ROCHESTER HAULING COMPANY FACILITY
WASTE MANAGEMENT OF NEW HAMPSHIRE, INC.
ROCHESTER, NEW HAMPSHIRE

BUILDING FLOOR PLAN

PROJECT NUMBER: 4292.00

SHEET NUMBER: 9 OF 22

© 2018 SANBORN, HEAD & ASSOCIATES, INC.

© 2018 SANBORN, HEAD & ASSOCIATES, INC.

REFERENCE NOTES:

1. BUILDING ELEVATIONS DESIGNED BY THE H.L. TURNER GROUP INC. OF CONCORD, NEW HAMPSHIRE AND PROVIDED TO SANBORN HEAD IN DIGITAL FORMAT ON MARCH 30, 2018.
2. GENERAL BUILDING ELEVATIONS SHOWN. ACTUAL EXTERIOR DESIGN TO BE DEVELOPED BY AN ARCHITECT DURING THE DESIGN BUILD PROCESS.

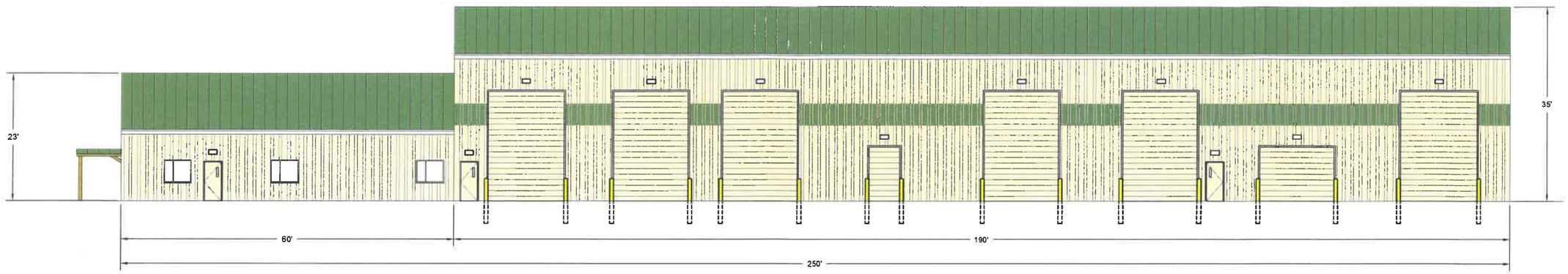

1 SOUTH WALL BUILDING ELEVATION

NOT TO SCALE

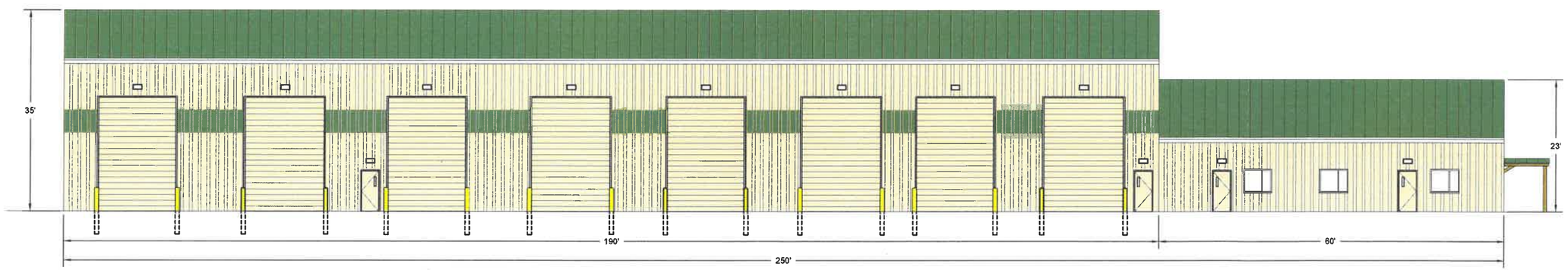

2 NORTH WALL BUILDING ELEVATION

NOT TO SCALE

FOR MORE INFORMATION ABOUT THESE PLANS, CONTACT THE CITY OF ROCHESTER PLANNING DEPARTMENT, 31 WAKEFIELD STREET, ROCHESTER, NH 03867 (603) 335-1338.

ROCHESTER PLANNING BOARD
APPROVAL CERTIFIED BY: DATE:

SANBORN HEAD

SCALE: AS NOTED

STATE OF NEW HAMPSHIRE
ERIC SCOTT STEINHAUSER
No. 11460
LICENSED
PROFESSIONAL ENGINEER

NO.	DATE	DESCRIPTION	BY

DRAWN BY: D. LONG
DESIGNED BY: D. LONG
REVIEWED BY: K. ANDERSON
PROJECT MGR: T. REED
PIC: E. STEINHAUSER
DATE: APRIL 2018

ROCHESTER HAULING COMPANY FACILITY
WASTE MANAGEMENT OF NEW HAMPSHIRE, INC.
ROCHESTER, NEW HAMPSHIRE

BUILDING ELEVATIONS

PROJECT NUMBER: 4292.00

SHEET NUMBER: 10 OF 22

© 2018 SANBORN, HEAD & ASSOCIATES, INC.

REFERENCE NOTES:

1. BUILDING ELEVATIONS DESIGNED BY THE H.L. TURNER GROUP INC. OF CONCORD, NEW HAMPSHIRE AND PROVIDED TO SANBORN HEAD IN DIGITAL FORMAT ON MARCH 30, 2018.
2. GENERAL BUILDING ELEVATIONS SHOWN. ACTUAL EXTERIOR DESIGN TO BE DEVELOPED BY AN ARCHITECT DURING THE DESIGN BUILD PROCESS.

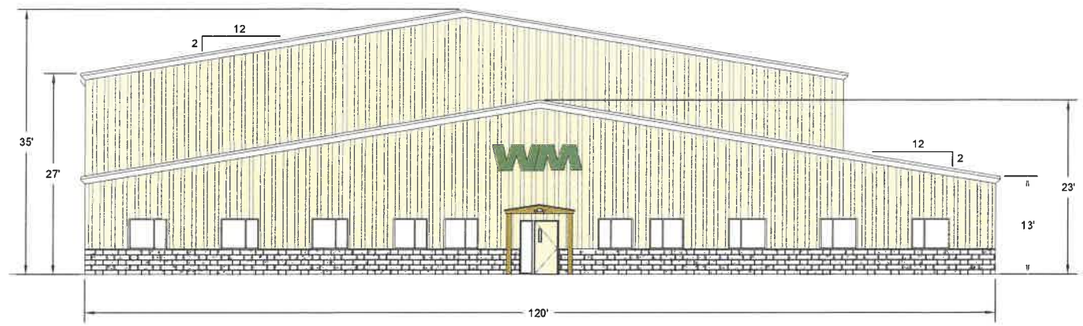

1 WEST WALL BUILDING ELEVATION

NOT TO SCALE

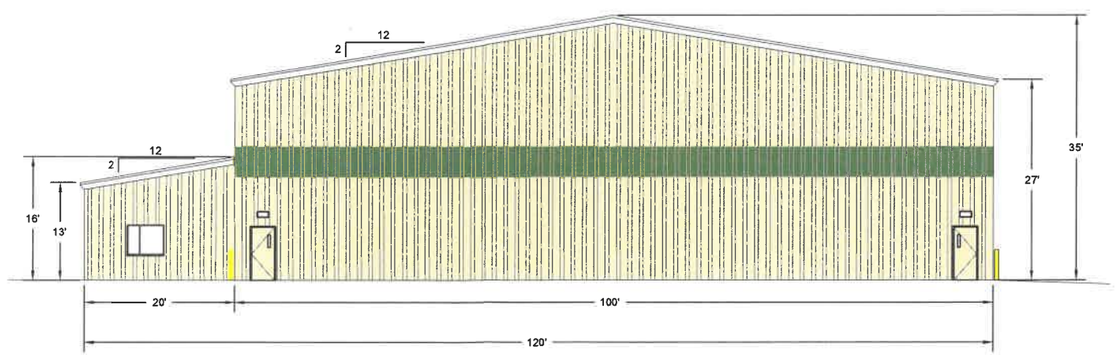

2 EAST WALL BUILDING ELEVATION

NOT TO SCALE

FOR MORE INFORMATION ABOUT THESE PLANS, CONTACT THE CITY OF ROCHESTER PLANNING DEPARTMENT, 31 WAKEFIELD STREET, ROCHESTER, NH 03867 (603) 335-1338.

ROCHESTER PLANNING BOARD
APPROVAL CERTIFIED BY: DATE:

SANBORN HEAD

SCALE: AS NOTED

STATE OF NEW HAMPSHIRE
ERIC SCOTT STEINHAUSER
No. 11420
LICENSED
PROFESSIONAL ENGINEER

NO.	DATE	DESCRIPTION	BY

DRAWN BY: D. LONG
DESIGNED BY: D. LONG
REVIEWED BY: K. ANDERSON
PROJECT MGR: T. REED
PIC: E. STEINHAUSER
DATE: APRIL 2018

ROCHESTER HAULING COMPANY FACILITY
WASTE MANAGEMENT OF NEW HAMPSHIRE, INC.
ROCHESTER, NEW HAMPSHIRE

BUILDING ELEVATIONS

PROJECT NUMBER: 4292.00

SHEET NUMBER: 11 OF 22

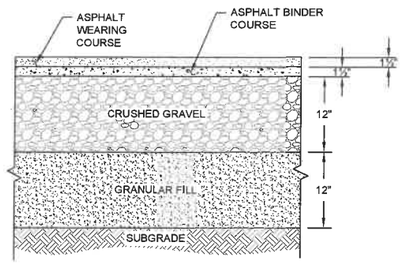

LIGHT DUTY PAVEMENT SECTION

1

NOT TO SCALE

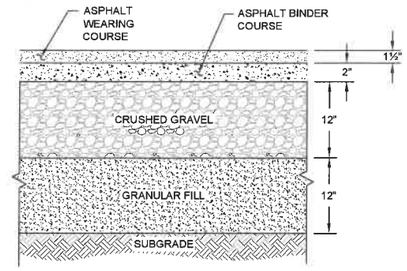

HEAVY DUTY PAVEMENT SECTION

2

NOT TO SCALE

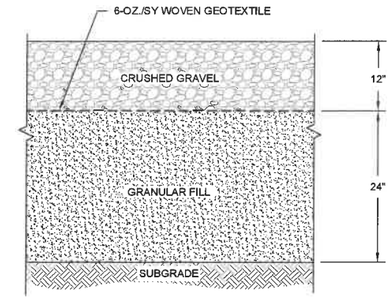

TYPICAL CRUSHED GRAVEL SECTION

3

NOT TO SCALE

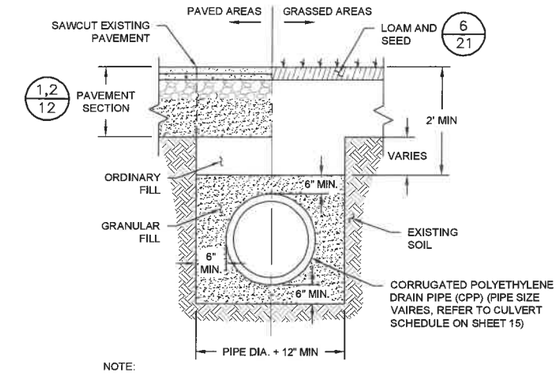

NOTE:

1. 12-INCHES OF GRANULAR FILL PIPE BEDDING SHALL BE PROVIDED IN AREAS WHERE LEDGE OR UNSUITABLE SOILS ARE ENCOUNTERED.

TYPICAL CULVERT PIPE SECTION

4

NOT TO SCALE

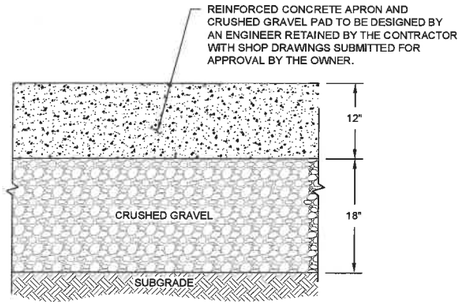

NOTE:

1. APPLY CONCRETE ARMOR SEALANT AS SPECIFIED BY OWNER.

CONCRETE APRON/PAD DETAIL

5

NOT TO SCALE

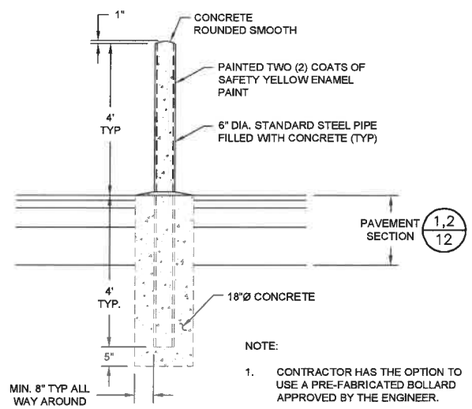

NOTE:

1. CONTRACTOR HAS THE OPTION TO USE A PRE-FABRICATED BOLLARD APPROVED BY THE ENGINEER.

BOLLARD DETAIL

8

NOT TO SCALE

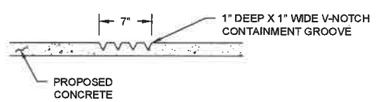

POSITIVE LIMITING BARRIER DETAIL

6

NOT TO SCALE

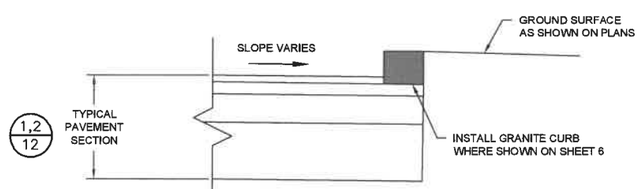

GRANITE CURB DETAIL

7

NOT TO SCALE

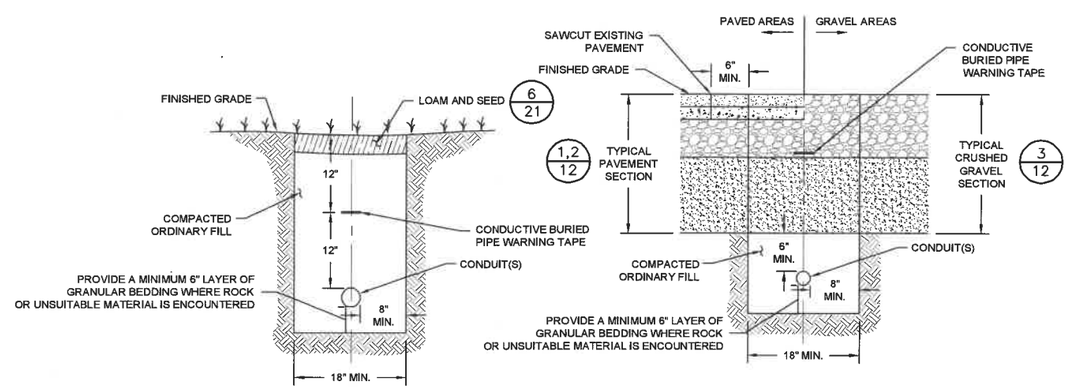

WITHIN UNPAVED AREAS

WITHIN PAVED AREAS

TYPICAL ELECTRIC CONDUIT TRENCH SECTIONS

9

NOT TO SCALE

FOR MORE INFORMATION ABOUT THESE PLANS, CONTACT THE CITY OF ROCHESTER PLANNING DEPARTMENT, 31 WAKEFIELD STREET, ROCHESTER, NH 03867 (603) 335-1338.

ROCHESTER PLANNING BOARD
APPROVAL CERTIFIED BY: DATE:

SANBORN HEAD

SCALE: AS NOTED

STATE OF NEW HAMPSHIRE ERIC SCOTT STEINHAUSER No. 11460 LICENSED PROFESSIONAL ENGINEER

NO.	DATE	DESCRIPTION	BY

DRAWN BY: A. MATTHEWS / D. LONG
DESIGNED BY: A. MATTHEWS / D. LONG
REVIEWED BY: K. ANDERSON
PROJECT MGR: T. REED
PIC: E. STEINHAUSER
DATE: APRIL 2018

ROCHESTER HAULING COMPANY FACILITY
WASTE MANAGEMENT OF NEW HAMPSHIRE, INC.
ROCHESTER, NEW HAMPSHIRE

DETAILS

PROJECT NUMBER: 4292.00

SHEET NUMBER: 12 OF 22

© 2018 SANBORN, HEAD & ASSOCIATES, INC.

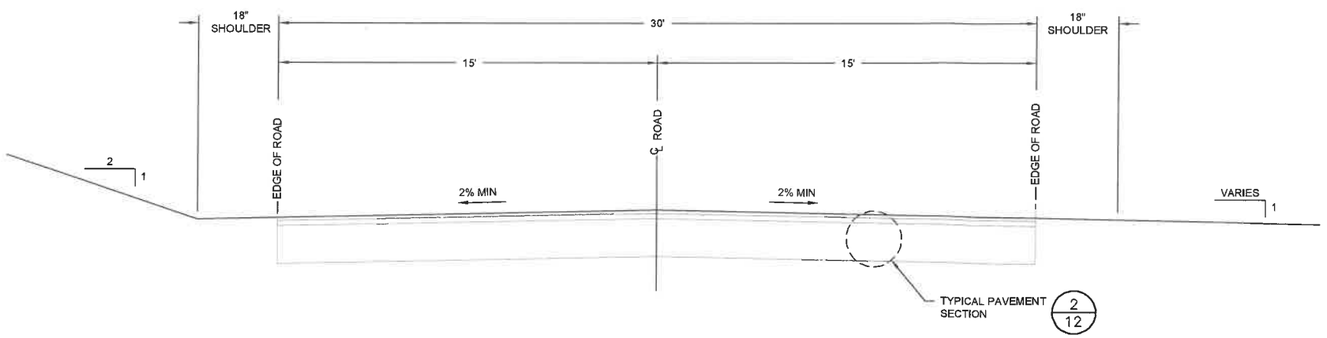

TYPICAL 30-FOOT WIDE TRUCK DRIVEWAY SECTION

1

NOT TO SCALE

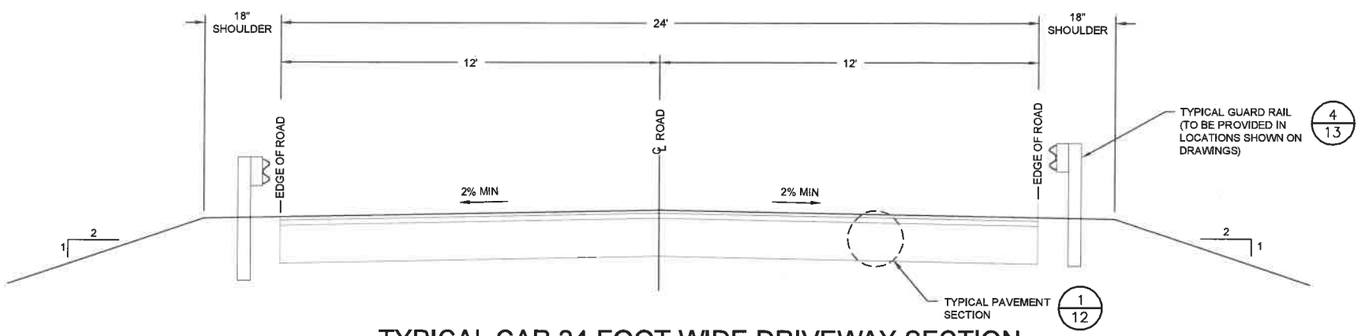

TYPICAL CAR 24-FOOT WIDE DRIVEWAY SECTION

2

NOT TO SCALE

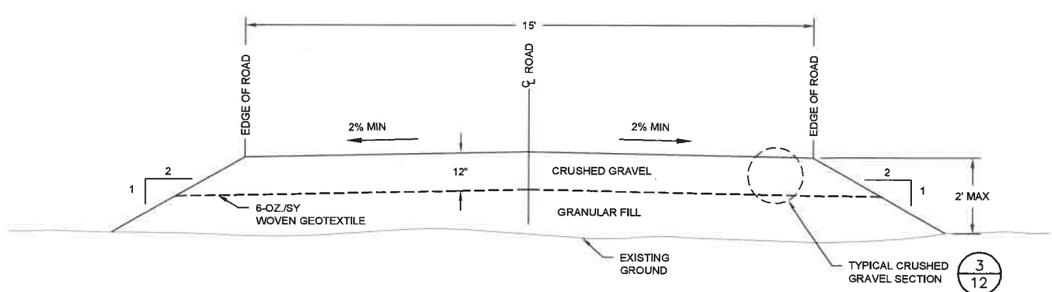

WOODS ACCESS ROAD SECTION

3

NOT TO SCALE

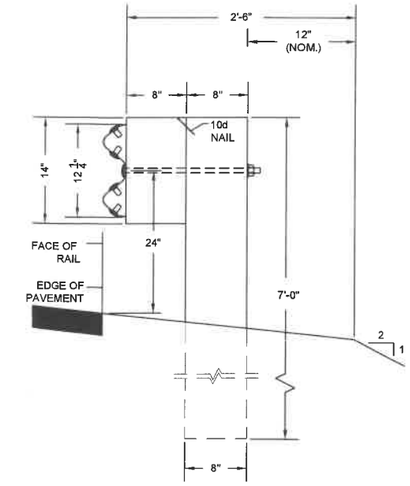

TYPICAL GUARDRAIL DETAIL

4

NOT TO SCALE

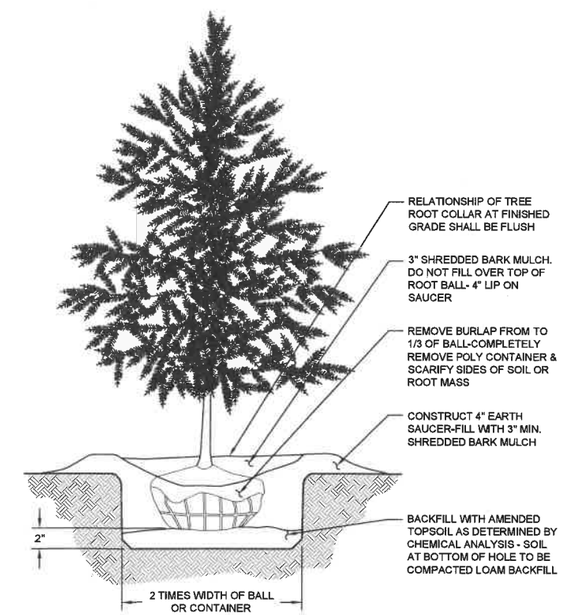

NOTES:

1. MINIMUM TREE HEIGHT FROM GROUND SURFACE OF 4-FEET.

2. TREE SPECIES TO BE SELECTED AS PART OF THE LANDSCAPE DESIGN AND SHALL BE ABLE TO TOLERATE EXPECTED CONDITIONS.

TYPICAL TREE PLANTING DETAIL

5

NOT TO SCALE

FOR MORE INFORMATION ABOUT THESE PLANS, CONTACT THE CITY OF ROCHESTER PLANNING DEPARTMENT, 31 WAKEFIELD STREET, ROCHESTER, NH 03867 (603) 335-1338.

ROCHESTER PLANNING BOARD
APPROVAL CERTIFIED BY: DATE:

SANBORN HEAD

SCALE: AS NOTED

STATE OF NEW HAMPSHIRE
ERIC SCOTT STEINHAUSER
No. 11420
LICENSED
PROFESSIONAL ENGINEER

NO.	DATE	DESCRIPTION	BY

DRAWN BY: A. MATTHEWS / D. LONG
DESIGNED BY: A. MATTHEWS / D. LONG
REVIEWED BY: K. ANDERSON
PROJECT MGR: T. REED
PIC: E. STEINHAUSER
DATE: APRIL 2018

ROCHESTER HAULING COMPANY FACILITY
WASTE MANAGEMENT OF NEW HAMPSHIRE, INC.
ROCHESTER, NEW HAMPSHIRE

DETAILS

PROJECT NUMBER: 4292.00

SHEET NUMBER: 13 OF 22

© 2018 SANBORN, HEAD & ASSOCIATES, INC.

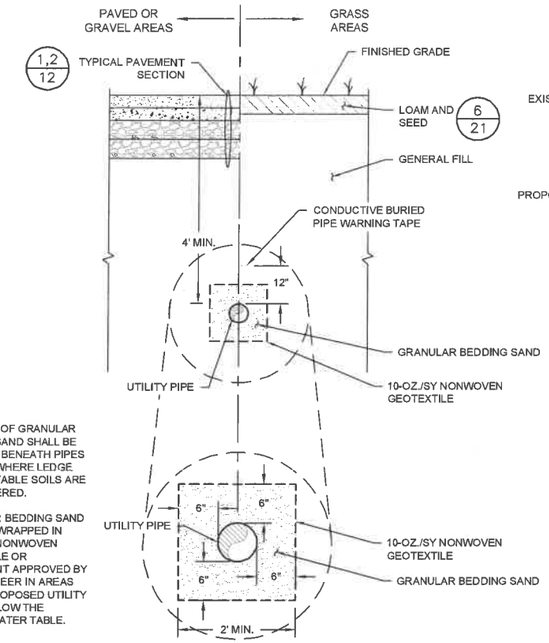

NOTES:

1. 12 INCHES OF GRANULAR BEDDING SAND SHALL BE PROVIDED BENEATH PIPES IN AREAS WHERE LEDGE OR UNSUITABLE SOILS ARE ENCOUNTERED.
2. GRANULAR BEDDING SAND SHALL BE WRAPPED IN 10-OZ./SY NONWOVEN GEOTEXTILE OR EQUIVALENT APPROVED BY THE ENGINEER IN AREAS WHERE PROPOSED UTILITY PIPE IS BELOW THE GROUNDWATER TABLE.

TYPICAL UTILITY TRENCHING DETAIL

1 NOT TO SCALE

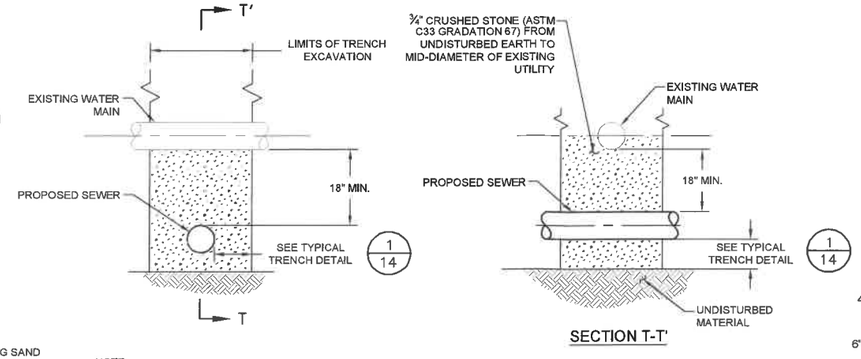

SECTION T-T'

NOTE:

1. A MINIMUM HORIZONTAL DISTANCE OF 10 FEET SHALL BE MAINTAINED BETWEEN WATER AND SEWER PIPES. WHENEVER SANITARY SEWER GRAVITY MAINS OR FORCE MAINS MUST CROSS WATER MAINS, THE SEWER OR LEACHATE FORCE MAIN SHALL BE INSTALLED BELOW THE WATER MAIN WITH A MINIMUM VERTICAL SEPARATION DISTANCE OF 18 INCHES.

WATER MAIN/SEWER CROSSING DETAIL

2 NOT TO SCALE

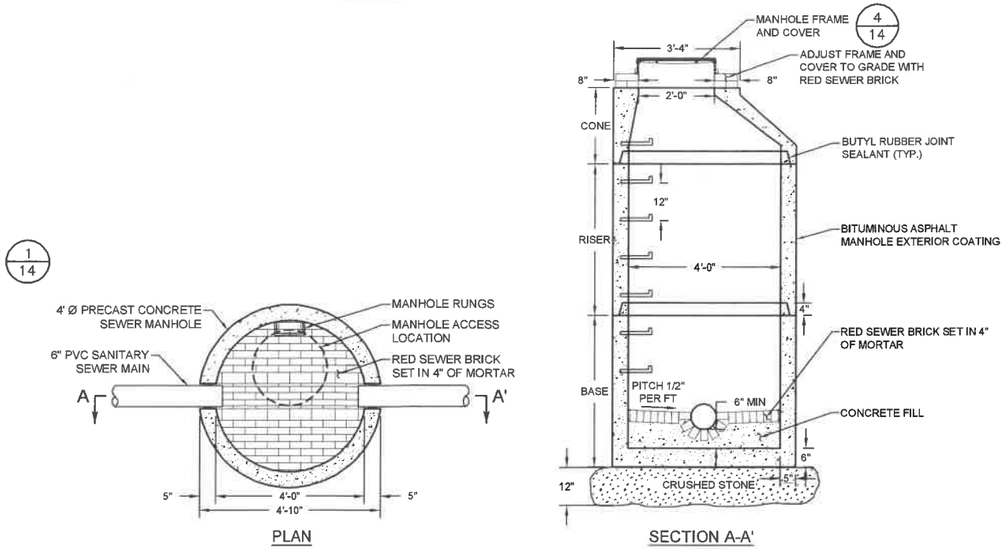

TYPICAL SANITARY SEWER MANHOLE DETAIL

3 NOT TO SCALE

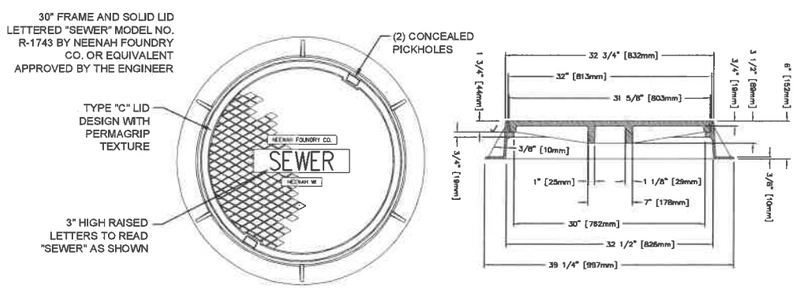

PLAN

ELEVATION

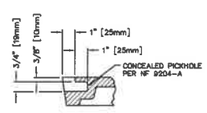

CONCEALED PICKHOLE

NOTES:

1. SEWER MANHOLE FRAME AND SOLID LID SHALL CONFORM TO CITY OF ROCHESTER D.P.W. SPECIFICATIONS AND STANDARDS.
2. 32" FRAME AND SOLID LID LETTERED "SEWER" MODEL NO. 62113 32D BY E.J. PRESCOTT, INC.
3. ALL DIMENSIONS SHOWN ARE IN ENGLISH AND [METRIC]
4. COMPONENT NO'S: FRAME 1743-2000; LID 1743-0002
5. MATERIAL: CAST GRAY IRON ASTM A-48, CLASS 35B
6. FINISH: NO PAINT
7. WEIGHT 137 LBS; LID 215 LBS.

TYPICAL SEWER MANHOLE FRAME AND COVER DETAIL

4 NOT TO SCALE

FOR MORE INFORMATION ABOUT THESE PLANS, CONTACT THE CITY OF ROCHESTER PLANNING DEPARTMENT, 31 WAKEFIELD STREET, ROCHESTER, NH 03867 (603) 335-1338.

ROCHESTER PLANNING BOARD
APPROVAL CERTIFIED BY: DATE:

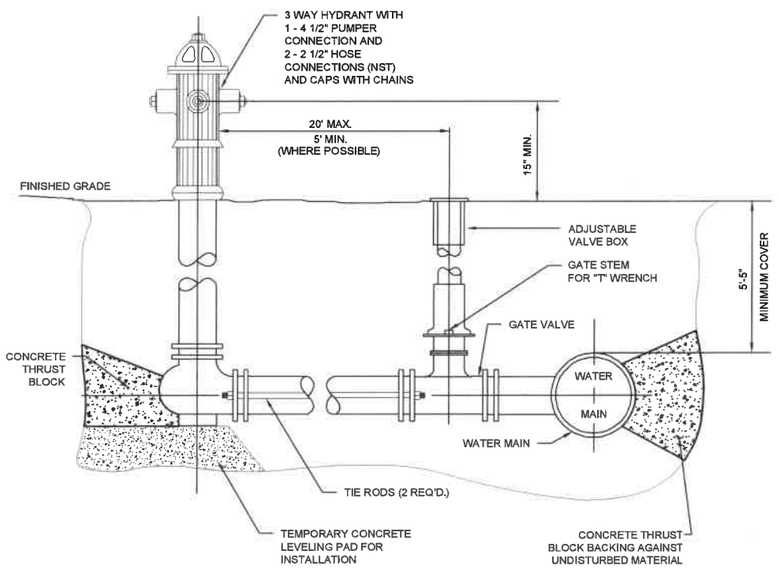

NOTES:

1. HYDRANT SHALL BE A MINIMUM OF 5'-0" FROM EDGE OF PAVEMENT.
2. ALL HYDRANTS SHALL HAVE RETAINER GLANDS.
3. CONCRETE BASE AND BLOCKING MATERIAL SHALL NOT BLOCK OR OBSTRUCT HYDRANT DRAIN.
4. HYDRANTS AND GATE VALVES SHALL CONFORM TO THE CITY OF ROCHESTER D.P.W. SPECIFICATIONS AND STANDARDS.

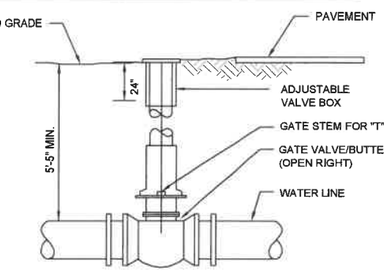

GATE VALVE

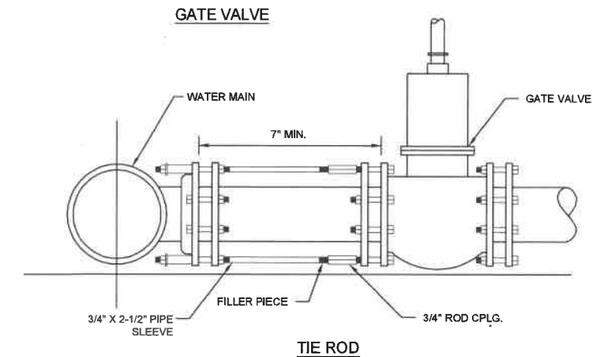

TIE ROD

NOTES:

1. MEGA-LUG RETAINER GLANDS IN ACCORDANCE WITH CITY OF ROCHESTER D.P.W. SPECIFICATIONS SHALL BE USED ON ALL GATE VALVES.
2. ALL GATE VALVES AND FITTINGS SHALL CONFORM TO CITY OF ROCHESTER D.P.W. SPECS. AND STANDARDS.

FIRE HYDRANT DETAILS

5 NOT TO SCALE

SANBORN HEAD

SCALE: AS NOTED

ERIC SCOTT STEINHAUSER No. 11496 LICENSED PROFESSIONAL ENGINEER STATE OF NEW HAMPSHIRE

NO.	DATE	DESCRIPTION	BY

DRAWN BY: A. MATTHEWS / D. LONG
DESIGNED BY: A. MATTHEWS / D. LONG
REVIEWED BY: K. ANDERSON
PROJECT MGR: T. REED
PIC: E. STEINHAUSER
DATE: APRIL 2018

ROCHESTER HAULING COMPANY FACILITY
WASTE MANAGEMENT OF NEW HAMPSHIRE, INC.
ROCHESTER, NEW HAMPSHIRE

WATER SUPPLY AND SEWER DETAILS

PROJECT NUMBER: 4292.00

SHEET NUMBER: 14 OF 22

© 2018 SANBORN, HEAD & ASSOCIATES, INC.

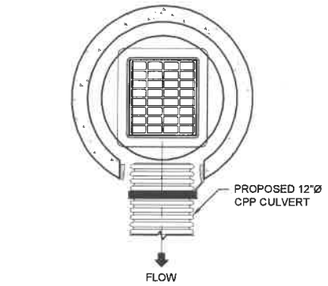

PLAN VIEW

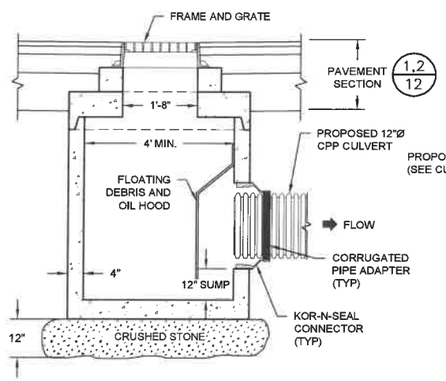

ELEVATION VIEW

1 TYPICAL CATCH BASIN - TYPE I

NOT TO SCALE

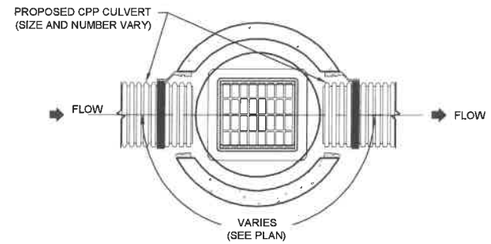

PLAN VIEW

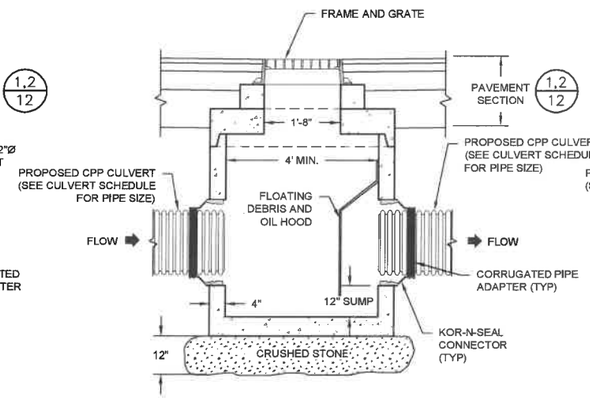

ELEVATION VIEW

2 TYPICAL CATCH BASIN - TYPE II

NOT TO SCALE

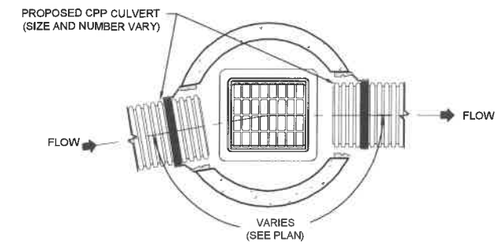

PLAN VIEW

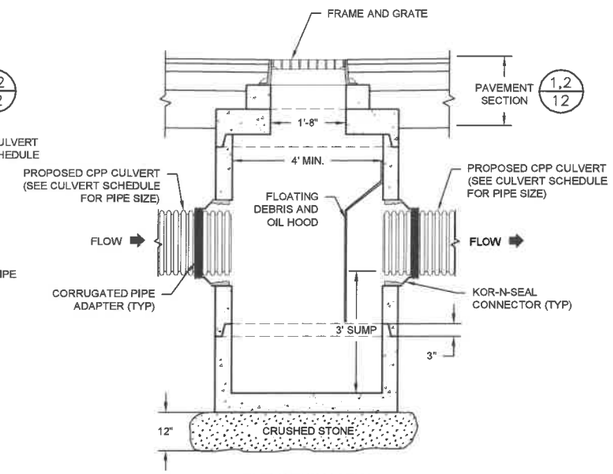

ELEVATION VIEW

3 TYPICAL CATCH BASIN - TYPE III

NOT TO SCALE

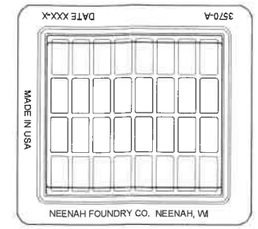

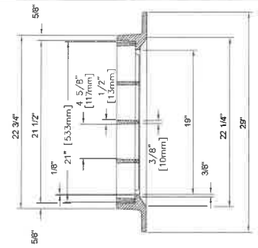

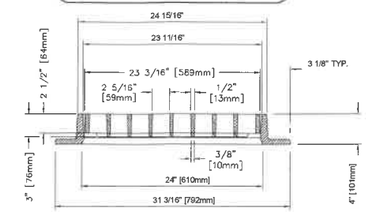

FRAME AND GRATE SHALL BY E.J. PRESCOTT, INC.

NOTE: ALL DIMENSIONS ARE SHOWN IN ENGLISH AND [METRIC].

COMPONENT NO'S: FRAME 3570-A, GRATE 3570-0002

MATERIAL: CAST GRAY IRON ASTM A-48, CLASS 35B

FINISH: NO PAINT

WEIGHT: FRAME 139 LBS, GRATE 108 LBS.

4 CATCH BASIN - FRAME AND GRATE DETAIL

NOT TO SCALE

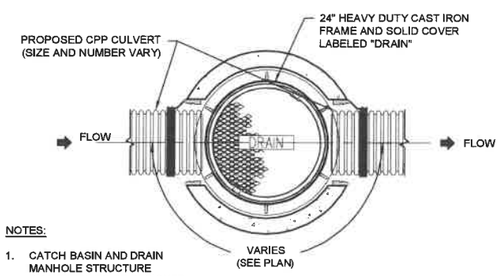

PLAN VIEW

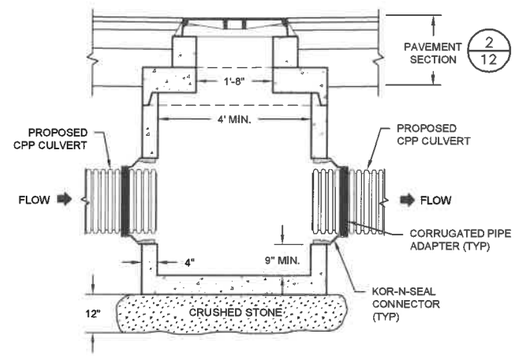

ELEVATION VIEW

NOTES:

1. CATCH BASIN AND DRAIN MANHOLE STRUCTURE DIAMETERS TO BE DESIGNED BY THE DESIGN BUILD ENGINEER.
2. DMH-02 SHALL HAVE SECOND OUTLET PIPE FOR STORMWATER OVERFLOW (NOT SHOWN ON DETAIL).

5 TYPICAL DRAIN MANHOLE DETAIL

NOT TO SCALE

CATCH BASIN TYPE	
CB-01	II
CB-02	II
CB-03	II
CB-04	III
CB-05	I
CB-06	II
CB-07	I
CB-08	I
CB-09	II
CB-10	II
CB-11	III
CB-12	II
CB-13	II
CB-14	III
CB-15	I
CB-16	II
CB-17	III

NOTES:

1. SEE DETAILS 1 THROUGH 3 ON THIS SHEET FOR INFORMATION EACH TYPE OF CATCH BASIN.
2. CATCH BASIN AND DRAIN MANHOLE STRUCTURE DIAMETERS TO BE DESIGNED BY THE DESIGN BUILD ENGINEER.

CULVERT AND DRAINAGE STRUCTURE SCHEDULE

CULVERT DESIGNATION	STRUCTURE UPSTEAM	PROPOSED RIM	INVERT UPSTREAM	STRUCTURE DOWNSTREAM	PROPOSED RIM	INVERT DOWNSTREAM	MATERIAL	DIAMETER (IN)	LENGTH (FT)	SLOPE (%)
C-1	EXISTING CB	283.24	277.52	CB-01	281.55	276.73	CPP	12	79	0.010
C-2	CB-01	281.55	276.63	CB-02	279.25	275.22	CPP	12	110	0.013
C-3	CB-02	279.25	274.96	CB-03	276.98	272.69	CPP	15	108	0.021
C-4	CB-03	276.98	271.90	HS-01	277.53	271.71	CPP	24	19	0.010
C-5	HS-01	277.53	271.63	STORAGE	-	271.14	CPP	24	49	0.010
C-6	STORAGE	-	270.82	POND	-	266.00	CPP	18	164	0.029
C-7	ROOF DRAIN	-	273.19	CB-04	275.41	272.14	CPP	6	105	0.010
C-8	CB-05	275.91	272.06	CB-04	275.41	271.12	CPP	12	94	0.010
C-9	CB-07	275.91	272.06	CB-06	275.41	271.12	CPP	12	94	0.010
C-10	CB-06	275.41	271.02	CB-04	275.41	269.88	CPP	15	114	0.010
C-11	CB-04	275.41	269.78	DMH-01	275.81	268.14	CPP	18	164	0.010
C-12	CB-08	278.76	274.74	CB-11	275.22	270.50	CPP	12	128	0.033
C-13	ROOF DRAIN	-	273.03	CB-09	275.22	272.27	CPP	6	55	0.014
C-14	CB-09	275.22	271.20	CB-10	275.22	270.03	CPP	12	117	0.010
C-15	ROOF DRAIN	-	273.03	CB-10	275.22	272.27	CPP	6	43	0.018
C-16	CB-10	275.22	269.93	CB-11	275.22	268.76	CPP	18	117	0.010
C-17	CB-11	275.22	268.66	CB-14	274.97	266.93	CPP	24	173	0.010
C-18	DMH-01	275.81	268.04	HS-02	275.03	266.44	CPP	18	160	0.010
C-19	ROOF DRAIN	-	273.03	CB-12	274.91	271.96	CPP	6	67	0.016
C-20	CB-12	274.91	270.89	CB-13	274.91	269.75	CPP	12	114	0.010
C-21	ROOF DRAIN	-	273.03	CB-13	274.91	271.96	CPP	6	55	0.019
C-22	CB-13	274.91	269.65	CB-14	274.97	268.51	CPP	18	114	0.010
C-23	CB-14	274.97	266.83	CB-17	274.24	265.64	CPP	24	119	0.010
C-24	CB-15	274.24	270.24	CB-16	274.24	268.80	CPP	12	144	0.010
C-25	CB-16	274.24	268.55	CB-17	274.24	267.11	CPP	15	144	0.010
C-26	CB-17	274.24	265.54	DMH-02	274.62	265.22	CPP	30	32	0.010
C-27	DMH-02	274.62	263.52	OWS-01	-	263.50	CPP	18	2	0.010
C-28	DMH-02	274.62	265.12	SWALE	-	263.21	CPP	24	44	0.043
C-29	OWS-01	-	263.50	SWALE	-	263.21	PVC	18	29	0.010
C-30	HS-02	275.03	266.36	SWALE	-	265.97	CPP	24	39	0.010

FOR MORE INFORMATION ABOUT THESE PLANS, CONTACT THE CITY OF ROCHESTER PLANNING DEPARTMENT, 31 WAKEFIELD STREET, ROCHESTER, NH 03867 (603) 335-1338.

ROCHESTER PLANNING BOARD
APPROVAL CERTIFIED BY: DATE:

SANBORN HEAD

SCALE: AS NOTED

STATE OF NEW HAMPSHIRE ERIC SCOTT STEINHAUSER No. 11464 LICENSED PROFESSIONAL ENGINEER

NO.	DATE	DESCRIPTION	BY

DRAWN BY: D. LONG
DESIGNED BY: D. LONG
REVIEWED BY: K. ANDERSON
PROJECT MGR: T. REED
PIC: E. STEINHAUSER
DATE: APRIL 2018

ROCHESTER HAULING COMPANY FACILITY
WASTE MANAGEMENT OF NEW HAMPSHIRE, INC.
ROCHESTER, NEW HAMPSHIRE

STORMWATER DETAILS

PROJECT NUMBER: 4292.00

SHEET NUMBER: 15 OF 22

© 2018 SANBORN, HEAD & ASSOCIATES, INC.

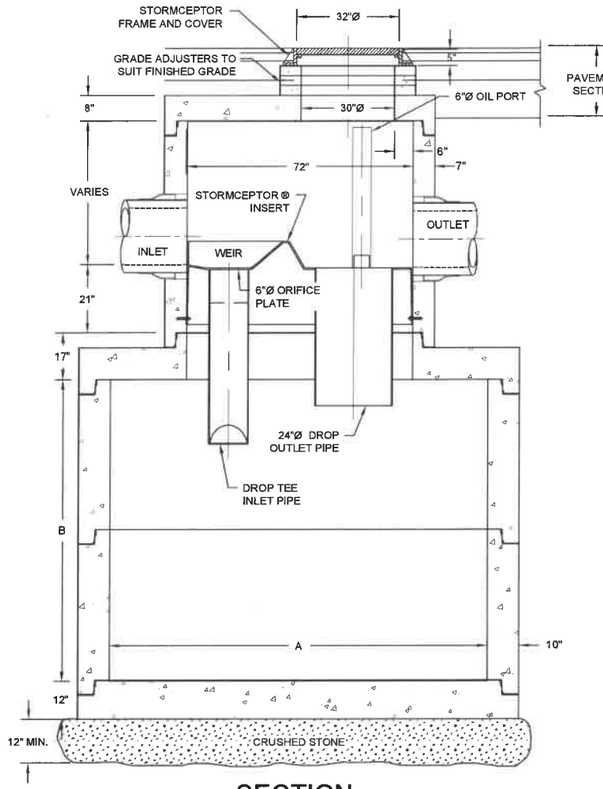

SECTION

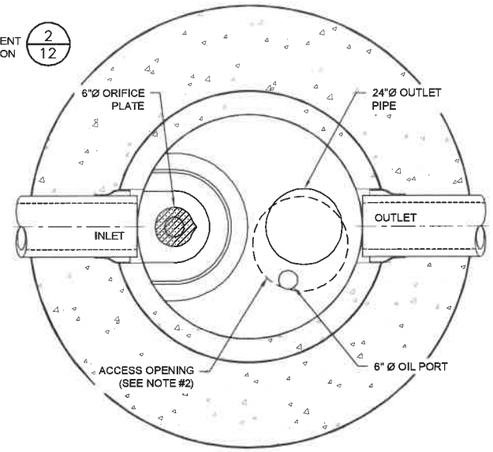

PLAN VIEW

HYDRODYNAMIC SEPARATOR SCHEDULE		
ID	A	B
HS-01	120"	90" MIN.
HS-02	144"	96" MIN.

NOTES:

1. HYDRODYNAMIC SEPARATOR SHOWN IS FOR REFERENCE ONLY.
2. HYDRODYNAMIC SEPARATORS TO BE DESIGNED BY LICENSED ENGINEER RETAINED BY THE CONTRACTOR TO PROVIDE MINIMUM TREATMENT FOR THE WATER QUALITY FLOWS. SHOP DRAWINGS TO BE SUBMITTED FOR APPROVAL BY THE CONTRACTOR.
3. THE USE OF FLEXIBLE CONNECTION IS RECOMMENDED AT THE INLET AN OUTLET WHERE APPLICABLE.
4. THE COVER SHOULD BE POSITIONED OVER THE OUTLET DROP PIPE AND THE OIL PORT.
5. THE STORMCEPTOR SYSTEM IS PROTECTED BY ONE OF MORE OF THE FOLLOWING U.S. PATENTS: #4985148, #5498331, #5725760, #5753115, #5849181, #6068765, #6371690.
6. CONTACT A CONCRETE PIPE DIVISION REPRESENTATIVE FOR FURTHER DETAILS NOT LISTED ON THIS DRAWING.
7. CONTRACTOR TO INSTALL STORMCEPTOR HYDRODYNAMIC SEPARATOR OR APPROVED EQUIVALENT.

TYPICAL HYDRODYNAMIC SEPARATOR DETAIL

1

NOT TO SCALE

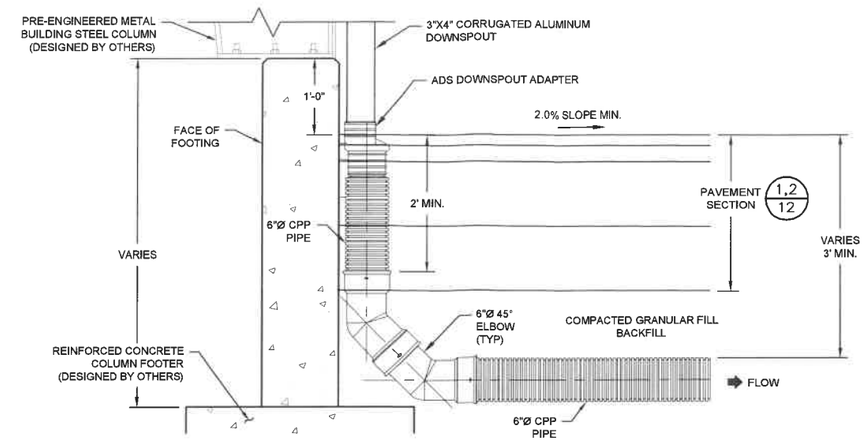

ROOF RUNOFF DRAIN

2

NOT TO SCALE

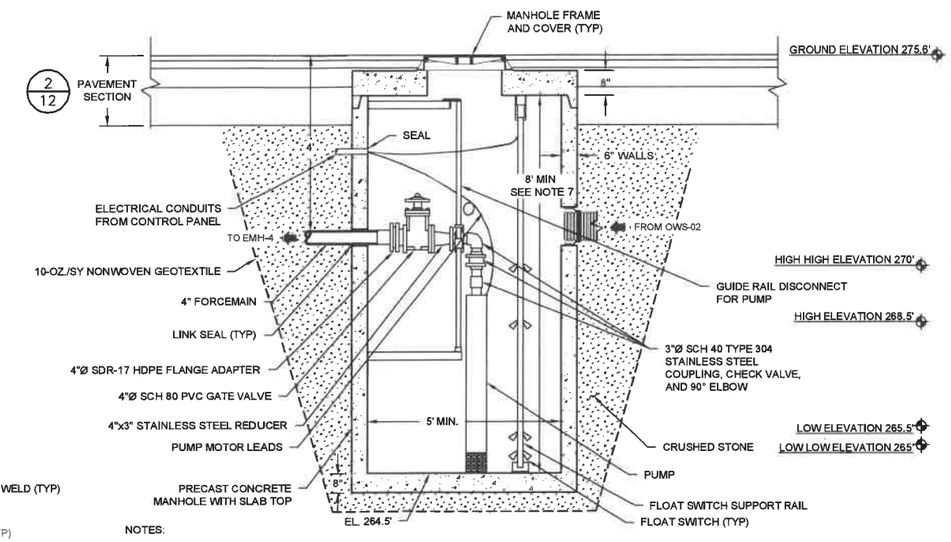

NOTES:

1. THE DRAIN STRUCTURE SHALL BE A REINFORCED CONCRETE PRECAST STRUCTURE WITH ALL REQUIRED WALL PENETRATIONS AND DRAIN INLET FRAME CAST-IN AT THE FACTORY AND SHIPPED TO THE SITE WITH SUFFICIENT LIFTING HOOKS TO ALLOW FOR PROPER PLACEMENT OF STRUCTURE. REINFORCEMENT FOR PRECAST STRUCTURE SHALL BE DESIGNED BY THE MANUFACTURER. DESIGN SHALL BE SUBMITTED TO THE ENGINEER FOR REVIEW PRIOR TO FABRICATION. DESIGN SUBMITTAL SHALL BE STAMPED BY A NEW HAMPSHIRE LICENSED PROFESSIONAL ENGINEER.
2. INTERIOR FLOOR AND WALL OF DRAIN STRUCTURE SHALL BE COATED AFTER INSTALLATION WITH 2 COATS OF SIKAGARD 62, COLOR GRAY MANUFACTURED BY SIKA CORPORATION OF MARION, OHIO.
3. EXTERIOR SURFACES OF THE DRAIN STRUCTURE TO BE INSTALLED BELOW GROUND SURFACE SHALL BE COATED WITH A CUT-BACK ASPHALT WATER-PROOFING PRODUCT DESIGNED FOR THIS APPLICATION.
4. JOINTS IN DRAIN STRUCTURE SHALL BE SEALED WITH EZ-STIK BUTYL-RUBBER -BASED PREFORMED FLEXIBLE SEALANT AND EXTERIOR OF JOINTS SHALL BE SEALED WITH EZ-WRAP EPDM-BACKED BUTYL-RUBBER-BASED TAPE.
5. INCLUDE SUFFICIENT SLACK IN PUMP MOTOR LEADS TO ALLOW FOR THE PUMP TO BE REMOVED FROM THE STRUCTURE.
6. PUMP TO BE DESIGNED TO CONVEY 150 GALLONS PER MINUTE (GPM) AND GENERATE A MINIMUM HEAD OF 16 FEET.
7. DEPTH OF STRUCTURE AND FLOAT ELEVATIONS TO BE DETERMINED BASED ON PUMP SELECTED. STRUCTURE MUST BE SIZED TO PROVIDE AN ADEQUATE SUMP AND FLOATS BE POSITIONED AT ELEVATIONS TO ALLOW FOR PROPER PUMP OPERATION.

PUMP STATION PS-01 DETAIL

4

NOT TO SCALE

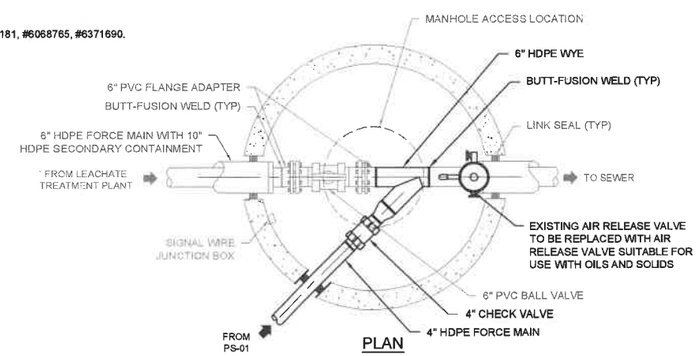

PLAN

SEWER FORCEMAIN TIE IN DETAIL AT EMH-4

3

NOT TO SCALE

FOR MORE INFORMATION ABOUT THESE PLANS, CONTACT THE CITY OF ROCHESTER PLANNING DEPARTMENT, 31 WAKEFIELD STREET, ROCHESTER, NH 03867 (603) 335-1338.

ROCHESTER PLANNING BOARD
APPROVAL CERTIFIED BY: DATE:

SANBORN HEAD

SCALE: AS NOTED

STATE OF NEW HAMPSHIRE ERIC SCOTT STEINHAUSER No. 11462 LICENSED PROFESSIONAL ENGINEER

NO.	DATE	DESCRIPTION	BY

DRAWN BY: D. LONG
DESIGNED BY: D. LONG
REVIEWED BY: K. ANDERSON
PROJECT MGR: T. REED
PIC: E. STEINHAUSER
DATE: APRIL 2018

ROCHESTER HAULING COMPANY FACILITY
WASTE MANAGEMENT OF NEW HAMPSHIRE, INC.
ROCHESTER, NEW HAMPSHIRE

STORMWATER DETAILS

PROJECT NUMBER: 4292.00

SHEET NUMBER: 16 OF 22

© 2019 SANBORN, HEAD & ASSOCIATES, INC.

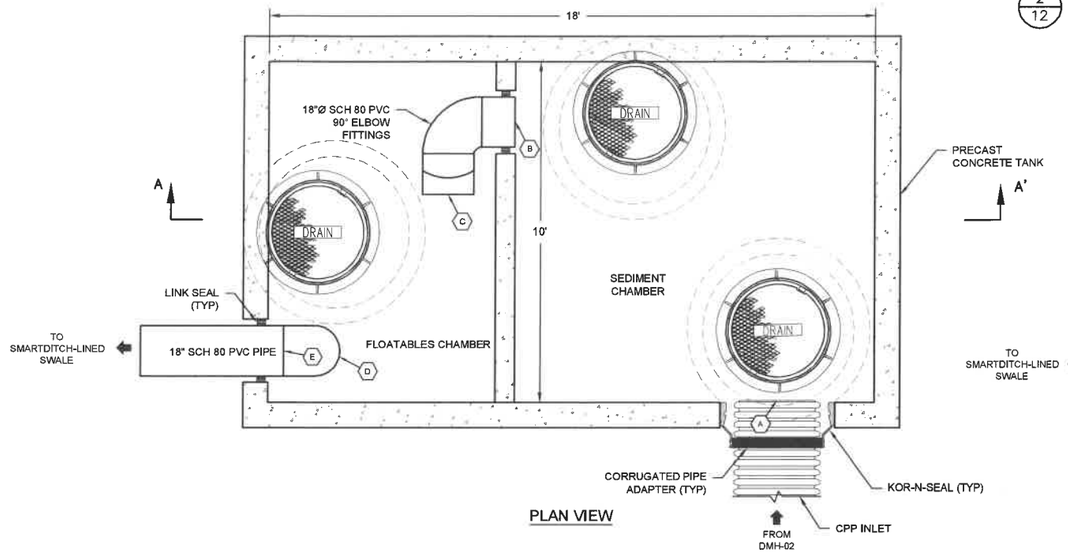

PLAN VIEW

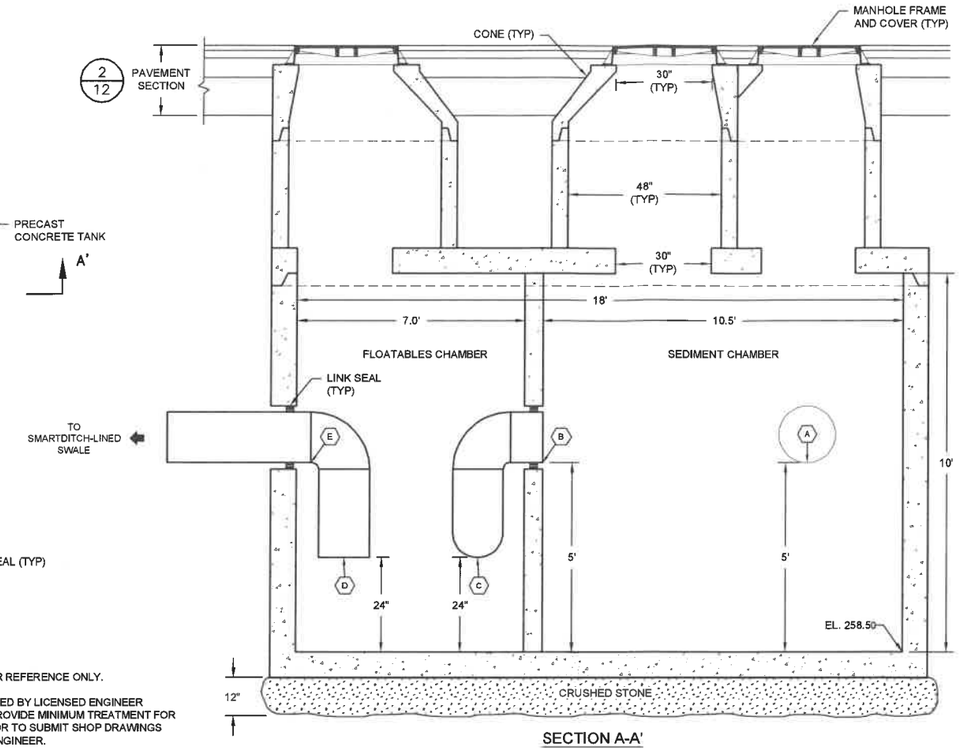

SECTION A-A'
ELEVATION VIEW

SEPARATOR INVERT SCHEDULE				
INVERT DESIGNATION	DESCRIPTION	PIPE DIAMETER (IN)	PIPE MATERIAL	INVERT ELEVATION (FT)
A	PIPE FROM DMH-02	18	CPP	263.50
B	FLOATABLES CHAMBER INLET (UPPER)	18	PVC	263.50
C	FLOATABLES CHAMBER INLET (LOWER)	18	PVC	260.50
D	FLOATABLES CHAMBER OUTLET (UPPER)	18	PVC	260.50
E	FLOATABLES CHAMBER OUTLET (LOWER)	18	PVC	263.50

NOTES:

1. OIL/WATER SEPARATOR SHOWN IS FOR REFERENCE ONLY.
2. OIL/WATER SEPARATOR TO BE DESIGNED BY LICENSED ENGINEER RETAINED BY THE CONTRACTOR TO PROVIDE MINIMUM TREATMENT FOR THE ANTICIPATED FLOWS. CONTRACTOR TO SUBMIT SHOP DRAWINGS FOR APPROVAL BY THE OWNER AND ENGINEER.

1 OIL/WATER SEPARATOR OWS-01 DETAIL

NOT TO SCALE

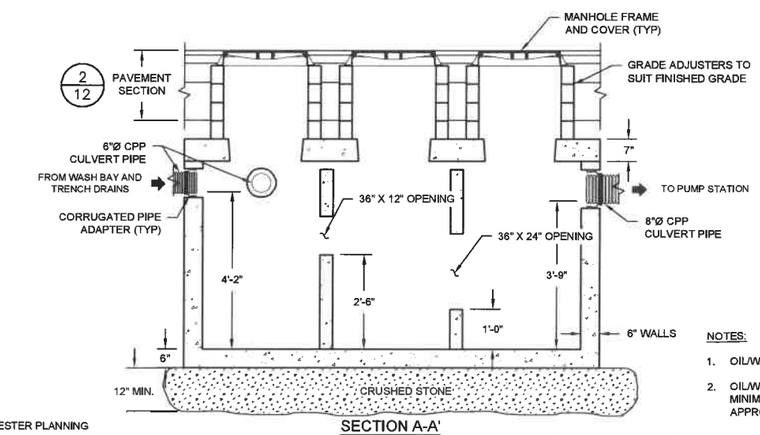

SECTION A-A'
ELEVATION VIEW

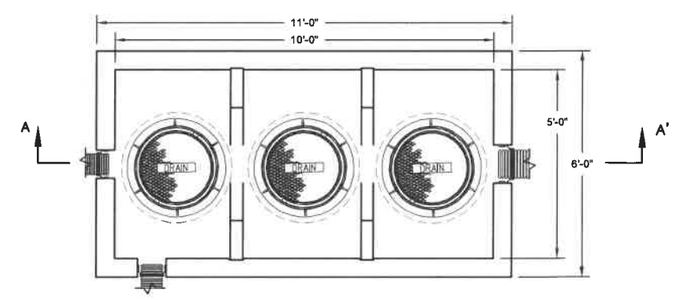

PLAN VIEW

NOTES:

1. OIL/WATER SEPARATOR SHOWN IS FOR REFERENCE ONLY.
2. OIL/WATER SEPARATOR TO BE DESIGNED BY LICENSED ENGINEER RETAINED BY THE CONTRACTOR TO PROVIDE MINIMUM TREATMENT FOR THE ANTICIPATED FLOWS. CONTRACTOR TO SUBMIT SHOP DRAWINGS FOR APPROVAL BY THE OWNER AND ENGINEER.

2 1,500 GALLON OIL/WATER SEPARATOR OWS-02 DETAIL

NOT TO SCALE

FOR MORE INFORMATION ABOUT THESE PLANS, CONTACT THE CITY OF ROCHESTER PLANNING DEPARTMENT, 31 WAKEFIELD STREET, ROCHESTER, NH 03867 (603) 335-1338.

ROCHESTER PLANNING BOARD
APPROVAL CERTIFIED BY: DATE:

SANBORN HEAD

SCALE: AS NOTED

STATE OF NEW HAMPSHIRE ERIC SCOTT STEINHAUSER NO. 13464 LICENSED PROFESSIONAL ENGINEER

NO.	DATE	DESCRIPTION	BY

DRAWN BY: D. LONG
DESIGNED BY: D. LONG
REVIEWED BY: K. ANDERSON
PROJECT MGR: T. REED
PIC: E. STEINHAUSER
DATE: APRIL 2018

ROCHESTER HAULING COMPANY FACILITY
WASTE MANAGEMENT OF NEW HAMPSHIRE, INC.
ROCHESTER, NEW HAMPSHIRE

STORMWATER DETAILS

PROJECT NUMBER: 4292.00

SHEET NUMBER: 17 OF 22

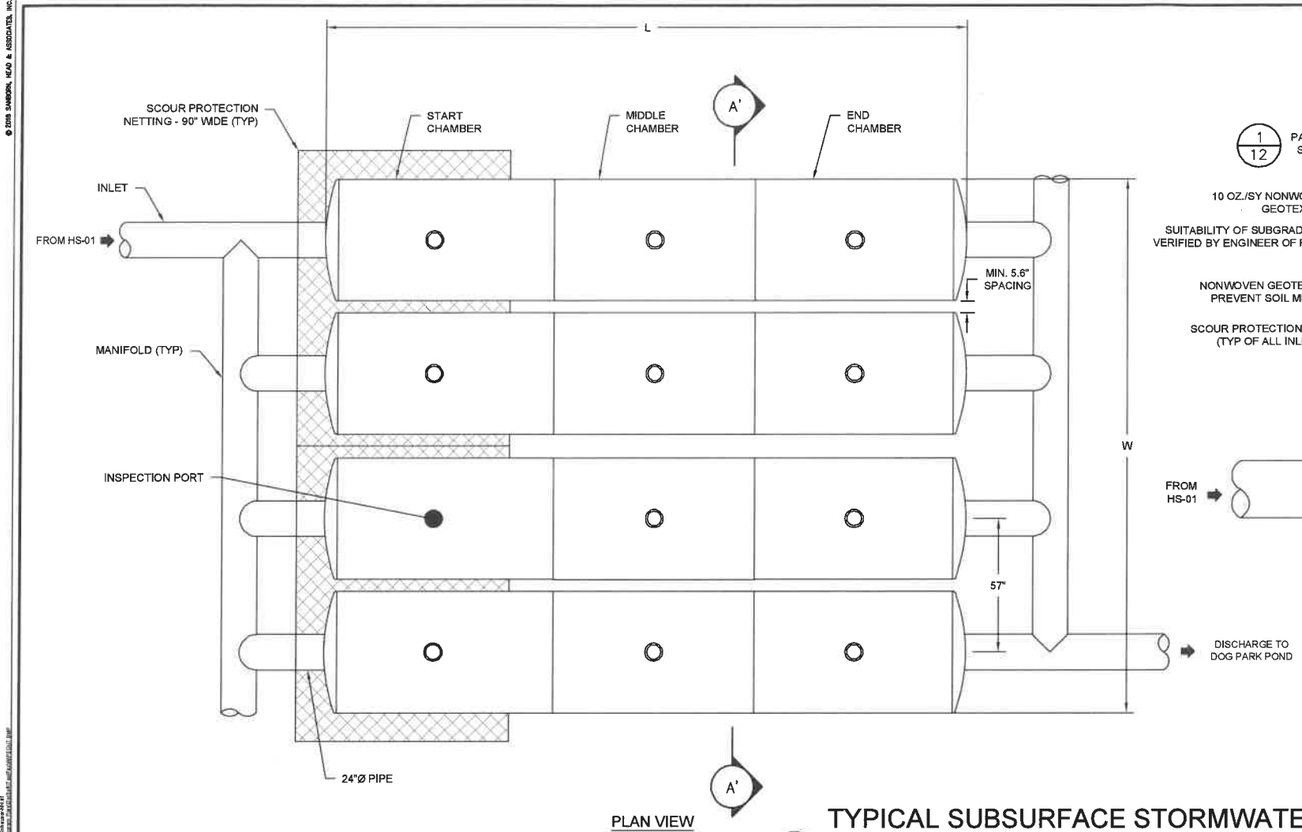

PLAN VIEW

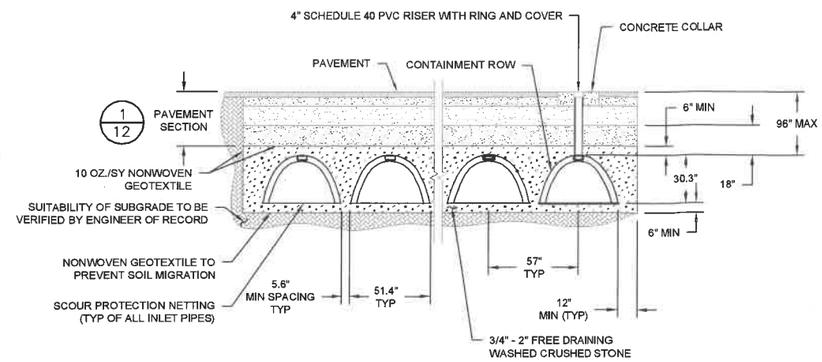

SECTION A-A'

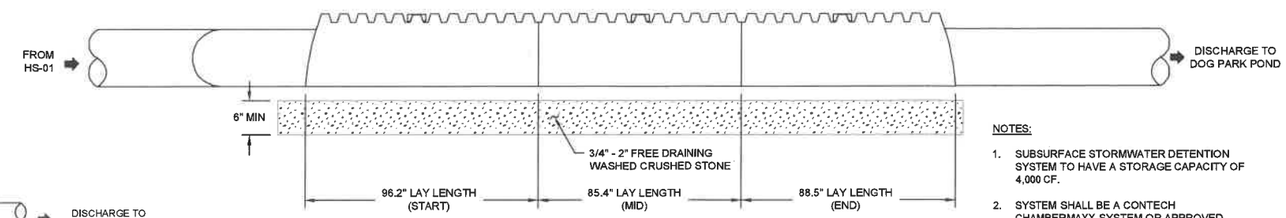

ELEVATION VIEW

NOTES:

1. SUBSURFACE STORMWATER DETENTION SYSTEM TO HAVE A STORAGE CAPACITY OF 4,000 CF.
2. SYSTEM SHALL BE A CONTECH CHAMBERMAXX SYSTEM OR APPROVED EQUIVALENT BY OWNER.
3. CONTRACTOR TO INSTALL SYSTEM IN ACCORDANCE WITH THE MANUFACTURER'S RECOMMENDATIONS.

1 TYPICAL SUBSURFACE STORMWATER DETENTION SYSTEM LAYOUT DETAIL

NOT TO SCALE

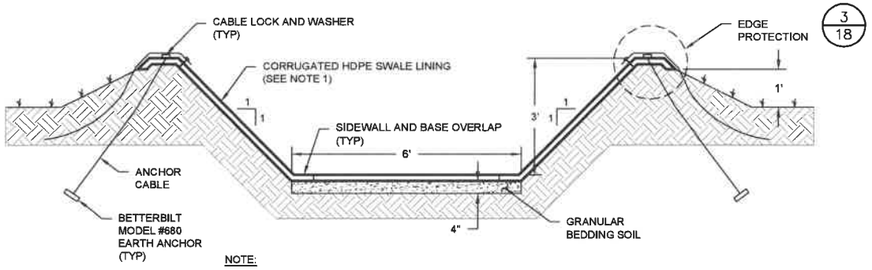

NOTE:

1. CORRUGATED HDPE SWALE LINING SHALL BE MEGADITCH BY PENDA CORPORATION, 2344 W. WISCONSIN STREET, PORTAGE, WI 53901 TEL. (866) 576-2783 WWW.SMARTDITCH.COM OR APPROVED EQUIVALENT.

2 SMARTDITCH-LINED SWALE SECTION

NOT TO SCALE

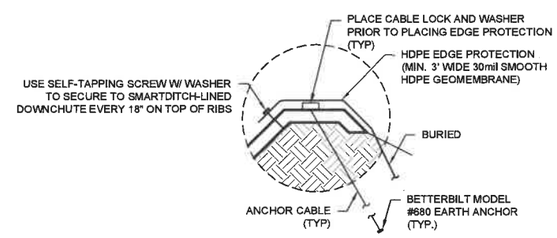

NOTE:

1. REFER TO MANUFACTURER'S RECOMMENDATIONS FOR MORE INFORMATION REGARDING THIS ANCHORING SYSTEM.

3 EDGE PROTECTION DETAIL

NOT TO SCALE

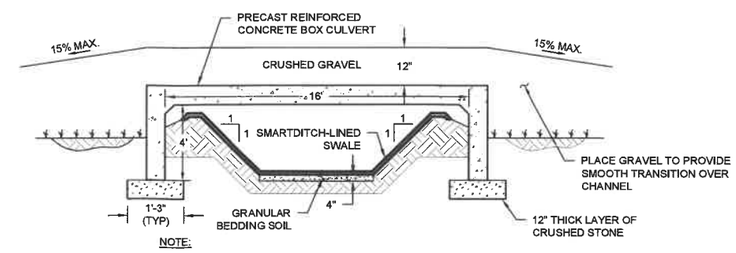

NOTE:

1. BOX CULVERT CROSSING TO BE RATED FOR AASHTO H-20 LOADING.

4 ROAD CROSSING BOX CULVERT DETAIL

NOT TO SCALE

FOR MORE INFORMATION ABOUT THESE PLANS, CONTACT THE CITY OF ROCHESTER PLANNING DEPARTMENT, 31 WAKEFIELD STREET, ROCHESTER, NH 03867 (603) 335-1338.

ROCHESTER PLANNING BOARD
APPROVAL CERTIFIED BY: DATE:

SANBORN HEAD

SCALE: AS NOTED

STATE OF NEW HAMPSHIRE ERIC SCOTT STEINHAUSER No. 11464 LICENSED PROFESSIONAL ENGINEER

NO.	DATE	DESCRIPTION	BY

DRAWN BY: D. LONG
DESIGNED BY: D. LONG
REVIEWED BY: K. ANDERSON
PROJECT MGR: T. REED
PIC: E. STEINHAUSER
DATE: APRIL 2018

ROCHESTER HAULING COMPANY FACILITY
WASTE MANAGEMENT OF NEW HAMPSHIRE, INC.
ROCHESTER, NEW HAMPSHIRE

STORMWATER DETAILS

PROJECT NUMBER: 4292.00

SHEET NUMBER: 18 OF 22

© 2018 SANBORN, HEAD & ASSOCIATES, INC.

© 2018 SANBORN, HEAD & ASSOCIATES, INC.

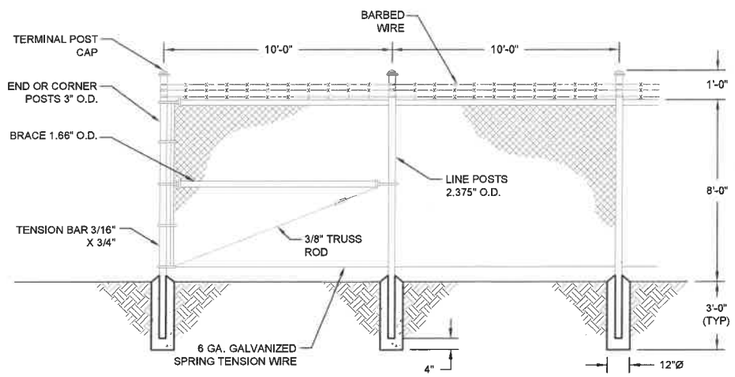

1 TYPICAL CHAIN LINK FENCE DETAIL

NOT TO SCALE

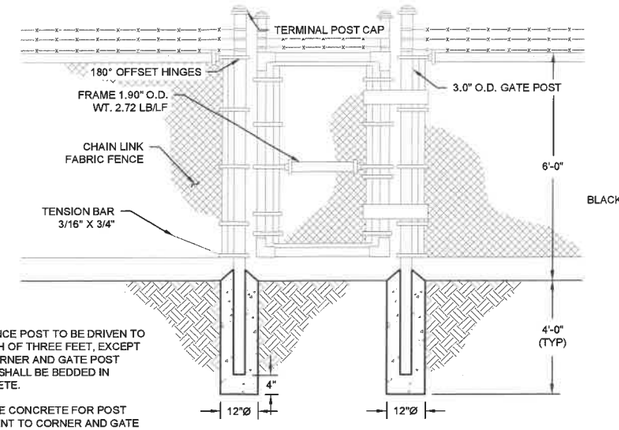

NOTES:

1. ALL FENCE POST TO BE DRIVEN TO A DEPTH OF THREE FEET, EXCEPT FOR CORNER AND GATE POST WHICH SHALL BE BEDDED IN CONCRETE.
2. PROVIDE CONCRETE FOR POST ADJACENT TO CORNER AND GATE POSTS.

2 PERSONNEL GATE DETAIL

NOT TO SCALE

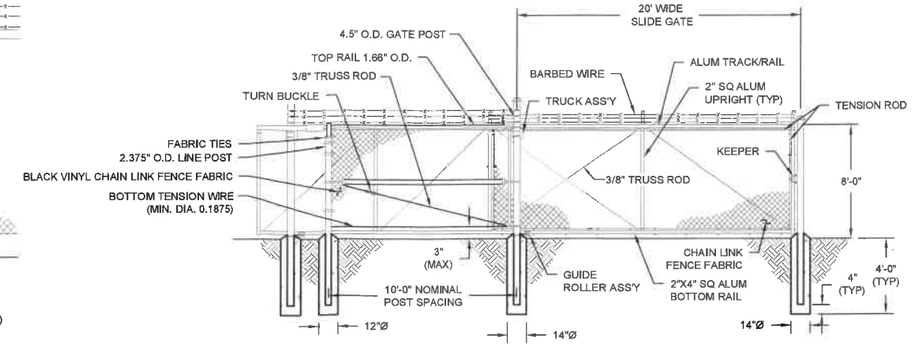

3 SINGLE CANTILEVERED SLIDE GATE DETAIL

NOT TO SCALE

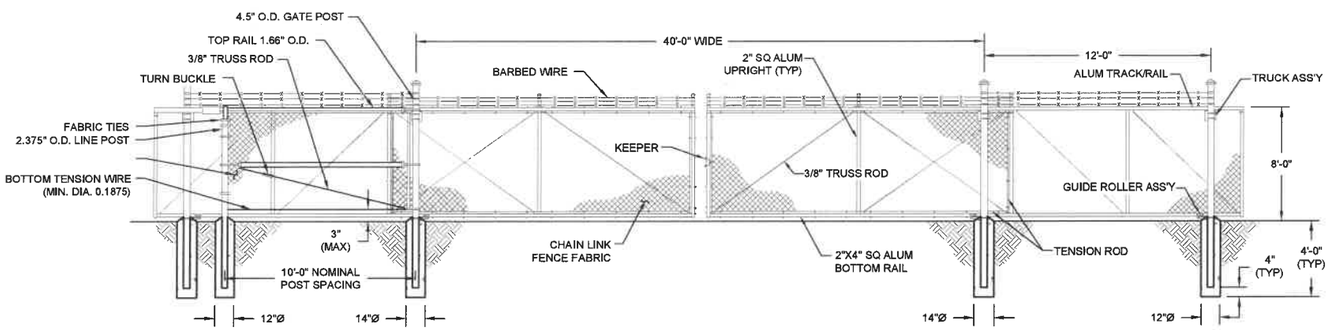

4 DOUBLE CANTILEVERED SLIDE GATE DETAIL

NOT TO SCALE

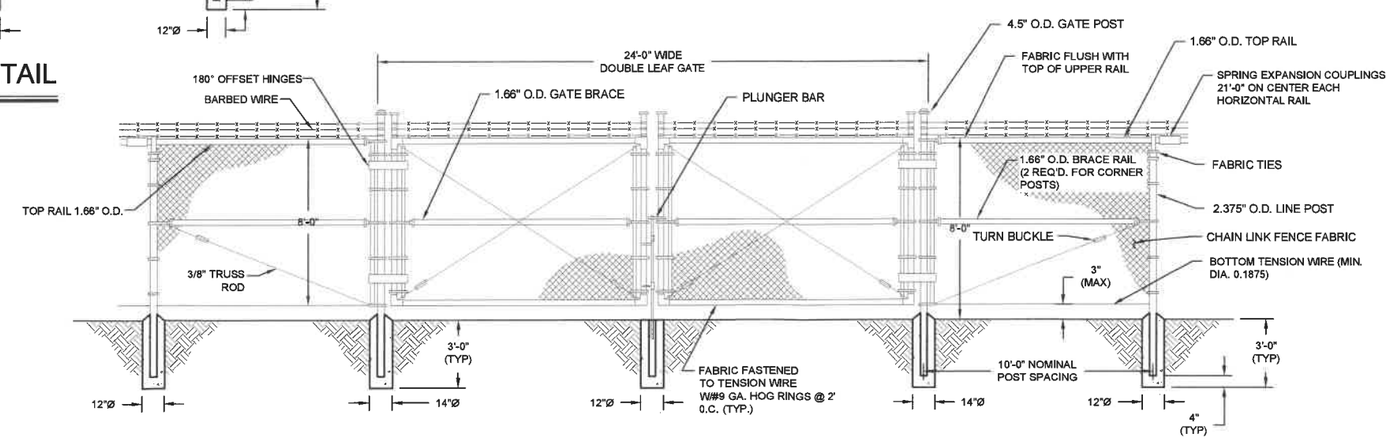

5 DOUBLE LEAF GATE DETAIL

NOT TO SCALE

FOR MORE INFORMATION ABOUT THESE PLANS, CONTACT THE CITY OF ROCHESTER PLANNING DEPARTMENT, 31 WAKEFIELD STREET, ROCHESTER, NH 03867 (603) 335-1338.

ROCHESTER PLANNING BOARD
APPROVAL CERTIFIED BY: DATE:

SANBORN HEAD

SCALE: AS NOTED

STATE OF NEW HAMPSHIRE ERIC SCOTT STEINHAUSER No. 11452 LICENSED PROFESSIONAL ENGINEER

NO.	DATE	DESCRIPTION	BY

DRAWN BY: A. MATTHEWS / D. LONG
DESIGNED BY: A. MATTHEWS / D. LONG
REVIEWED BY: K. ANDERSON
PROJECT MGR: T. REED
PIC: E. STEINHAUSER
DATE: APRIL 2018

ROCHESTER HAULING COMPANY FACILITY
WASTE MANAGEMENT OF NEW HAMPSHIRE, INC.
ROCHESTER, NEW HAMPSHIRE

FENCE DETAILS

PROJECT NUMBER: 4292.00

SHEET NUMBER: 19 OF 22

© 2018 SANBORN, HEAD & ASSOCIATES, INC.

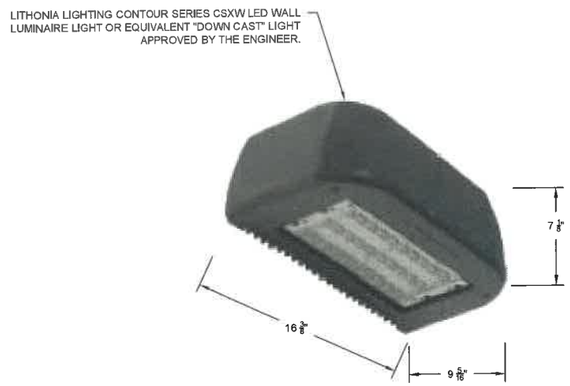

NOTES:

1. SPECIFICATION SHEETS FOR THIS PRODUCT ARE AVAILABLE AT WWW.LITHONIA.COM

1 TYPICAL WALL LIGHT DETAIL

NOT TO SCALE

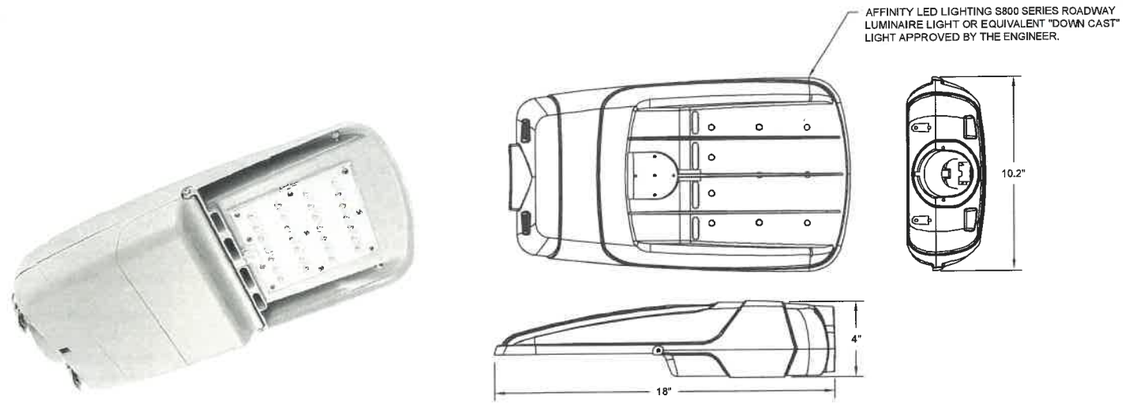

NOTES:

1. MOUNTING HEIGHT = 15 FEET.
2. SPECIFICATION SHEETS AVAILABLE FOR THIS PRODUCT AT WWW.AFFINITYLEDLIGHT.COM

2 TYPICAL TRAFFIC AREA LIGHT DETAIL

NOT TO SCALE

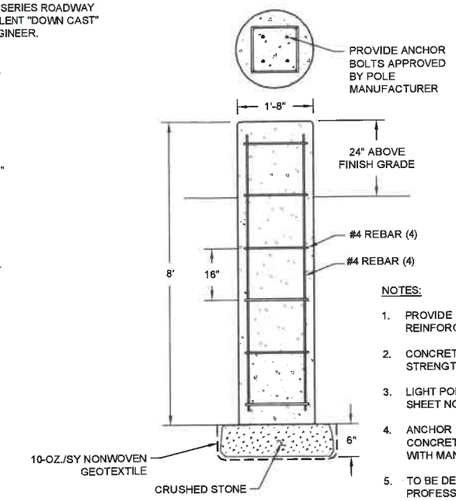

NOTES:

1. PROVIDE 3" CONCRETE COVER OVER REINFORCING STEEL.
2. CONCRETE SHALL BE MIN. 3500 PSI COMPRESSIVE STRENGTH AT 28 DAYS.
3. LIGHT POLE LOCATIONS ARE INDICATED ON SHEET NO. 4.
4. ANCHOR BOLTS SHALL BE ATTACHED TO CONCRETE REINFORCEMENT IN ACCORDANCE WITH MANUFACTURER'S RECOMMENDATIONS.
5. TO BE DESIGNED BY NEW HAMPSHIRE LICENSED PROFESSIONAL ENGINEER.

3 TYPICAL LIGHT POLE BASE DETAIL

NOT TO SCALE

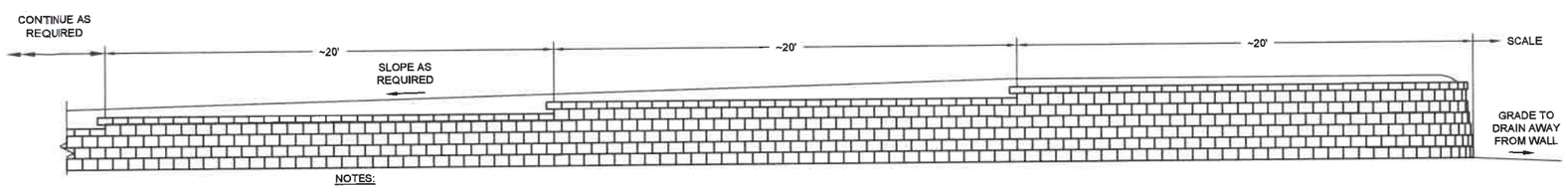

NOTES:

1. SEGMENTAL RETAINING WALL SYSTEM TO BE DESIGNED BY NEW HAMPSHIRE LICENSED PROFESSIONAL ENGINEER.
2. SEGMENTAL RETAINING WALL SYSTEM TO BE CONSTRUCTED IN ACCORDANCE WITH MANUFACTURER'S RECOMMENDATIONS.
3. CONTRACTOR SHALL PROVIDE SHOP DRAWINGS FOR APPROVAL BY THE OWNER PRIOR TO DELIVERY TO THE SITE.

4 TYPICAL SEGMENTAL RETAINING WALL ELEVATION

NOT TO SCALE

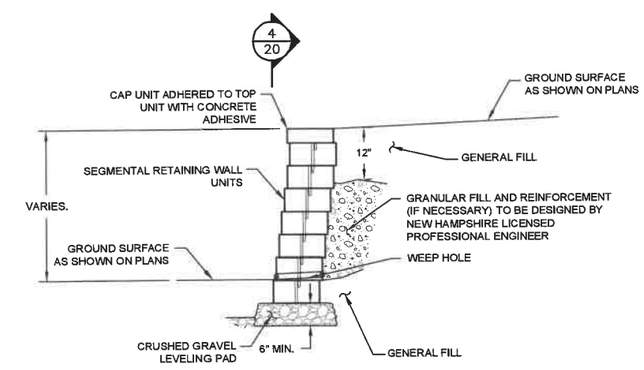

NOTES:

1. SEGMENTAL RETAINING WALL SYSTEM TO BE DESIGNED BY NEW HAMPSHIRE LICENSED PROFESSIONAL ENGINEER.
2. ITEMS SUCH AS TRUSSES, FENCES, AND GUARDRAILS NOT SHOWN FOR CLARITY.

5 TYPICAL RETAINING WALL SECTION

NOT TO SCALE

NOTE:

1. REFER TO SHEETS G-1.11 AND P-1.0 FOR INFORMATION ON CNG EQUIPMENT AREA AND TRUSS SYSTEM LIGHTING. INFORMATION PROVIDED BY T. MITCHELL ENGINEERS, INC. OF SAN LEANDRO, CALIFORNIA.

FOR MORE INFORMATION ABOUT THESE PLANS, CONTACT THE CITY OF ROCHESTER PLANNING DEPARTMENT, 31 WAKEFIELD STREET, ROCHESTER, NH 03867 (603) 335-1338.

ROCHESTER PLANNING BOARD
APPROVAL CERTIFIED BY: DATE:

SANBORN HEAD

SCALE: AS NOTED

STATE OF NEW HAMPSHIRE ERIC SCOTT STEINHAUSER No. 11686 LICENSED PROFESSIONAL ENGINEER

NO.	DATE	DESCRIPTION	BY

DRAWN BY: A. MATTHEWS / D. LONG
DESIGNED BY: A. MATTHEWS / D. LONG
REVIEWED BY: K. ANDERSON
PROJECT MGR: T. REED
PIC: E. STEINHAUSER
DATE: APRIL 2018

ROCHESTER HAULING COMPANY FACILITY
WASTE MANAGEMENT OF NEW HAMPSHIRE, INC.
ROCHESTER, NEW HAMPSHIRE

LIGHTING AND RETAINING WALL DETAILS

PROJECT NUMBER: 4292.00

SHEET NUMBER: 20 OF 22

© 2018 SANBORN, HEAD & ASSOCIATES, INC.

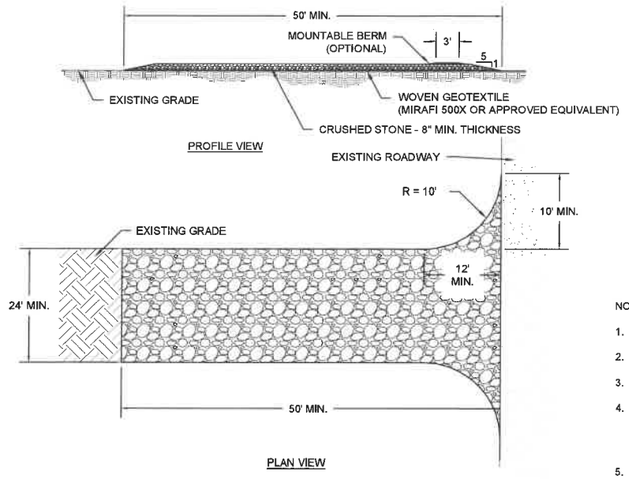

NOTES:

1. LENGTH - NOT LESS THAN 50'.
2. THICKNESS - NOT LESS THAN 8".
3. WIDTH - NOT LESS THAN 24'.
4. THE ENTRANCE SHALL BE MAINTAINED IN A CONDITION WHICH WILL LIMIT TRACKING OR FLOWING OF SEDIMENT ONTO PUBLIC RIGHTS-OF-WAY. SEDIMENT SPILLED, DROPPED, WASHED, OR TRACKED ONTO PUBLIC RIGHTS-OF-WAY MUST BE REMOVED.
5. PERIODIC INSPECTION, AND MAINTENANCE IF REQUIRED, SHALL BE PROVIDED AFTER EACH RAIN EVENT.

1 STABILIZED CONSTRUCTION ENTRANCE DETAIL

NOT TO SCALE

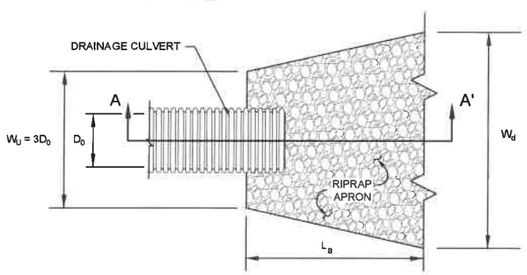

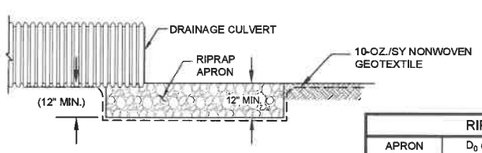

RIPRAP OUTLET PROTECTION APRON SCHEDULE						
APRON	D_0 (ft)	W_u (ft)	L_a (ft)	W_d (ft)	RIPRAP TYPE	h (in)
A-1	1.50	4.50	10	11.50	TYPE I	12
A-2	1.50	4.50	10	11.50	TYPE I	12

3 RIPRAP OUTLET PROTECTION APRON DETAIL

NOT TO SCALE

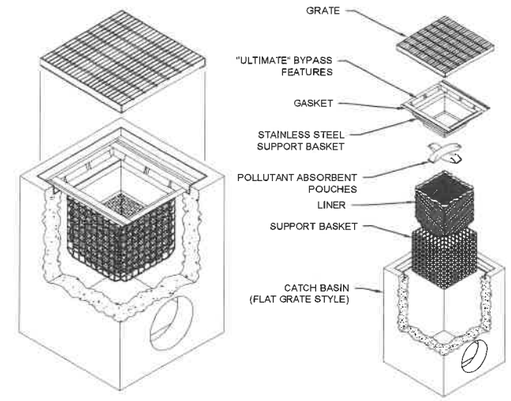

NOTES:

1. FILTER INSERT SHALL HAVE A HIGH FLOW BYPASS FEATURE.
2. FILTER SUPPORT FRAME SHALL BE CONSTRUCTED FROM STAINLESS STEEL TYPE 304.
3. POLLUTANT ABSORBENT POUCHES SHALL CONSIST OF FOSSIL ROCK AND SHALL BE INSTALLED AND MAINTAINED IN ACCORDANCE WITH MANUFACTURER SPECIFICATIONS.
4. STORAGE CAPACITY REFLECTS 80% OF MAXIMUM SOLIDS COLLECTION PRIOR TO IMPEDING FILTERING BYPASS.

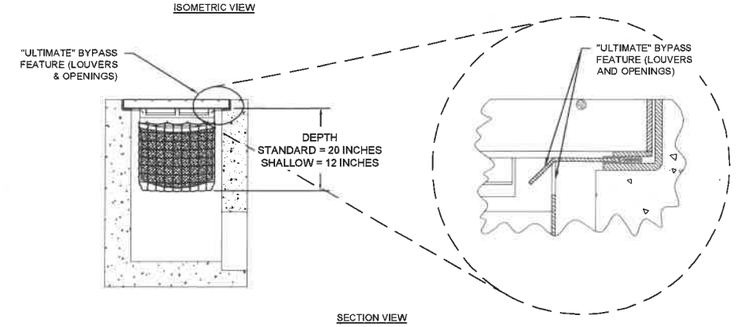

2 CATCH BASIN SILT SOCK DETAIL

NOT TO SCALE

FOR MORE INFORMATION ABOUT THESE PLANS, CONTACT THE CITY OF ROCHESTER PLANNING DEPARTMENT, 31 WAKEFIELD STREET, ROCHESTER, NH 03867 (603) 335-1338.

ROCHESTER PLANNING BOARD
APPROVAL CERTIFIED BY: DATE:

SANBORN HEAD

SCALE: AS NOTED

STATE OF NEW HAMPSHIRE ERIC SCOTT STEINHAUSER No. 13460 LICENSED PROFESSIONAL ENGINEER

NO.	DATE	DESCRIPTION	BY

DRAWN BY: A. MATTHEWS / D. LONG
DESIGNED BY: A. MATTHEWS / D. LONG
REVIEWED BY: K. ANDERSON
PROJECT MGR: T. REED
PIC: E. STEINHAUSER
DATE: APRIL 2018

ROCHESTER HAULING COMPANY FACILITY
WASTE MANAGEMENT OF NEW HAMPSHIRE, INC.
ROCHESTER, NEW HAMPSHIRE

EROSION AND SEDIMENTATION CONTROL DETAILS

PROJECT NUMBER: 4292.00

SHEET NUMBER: 22 OF 22

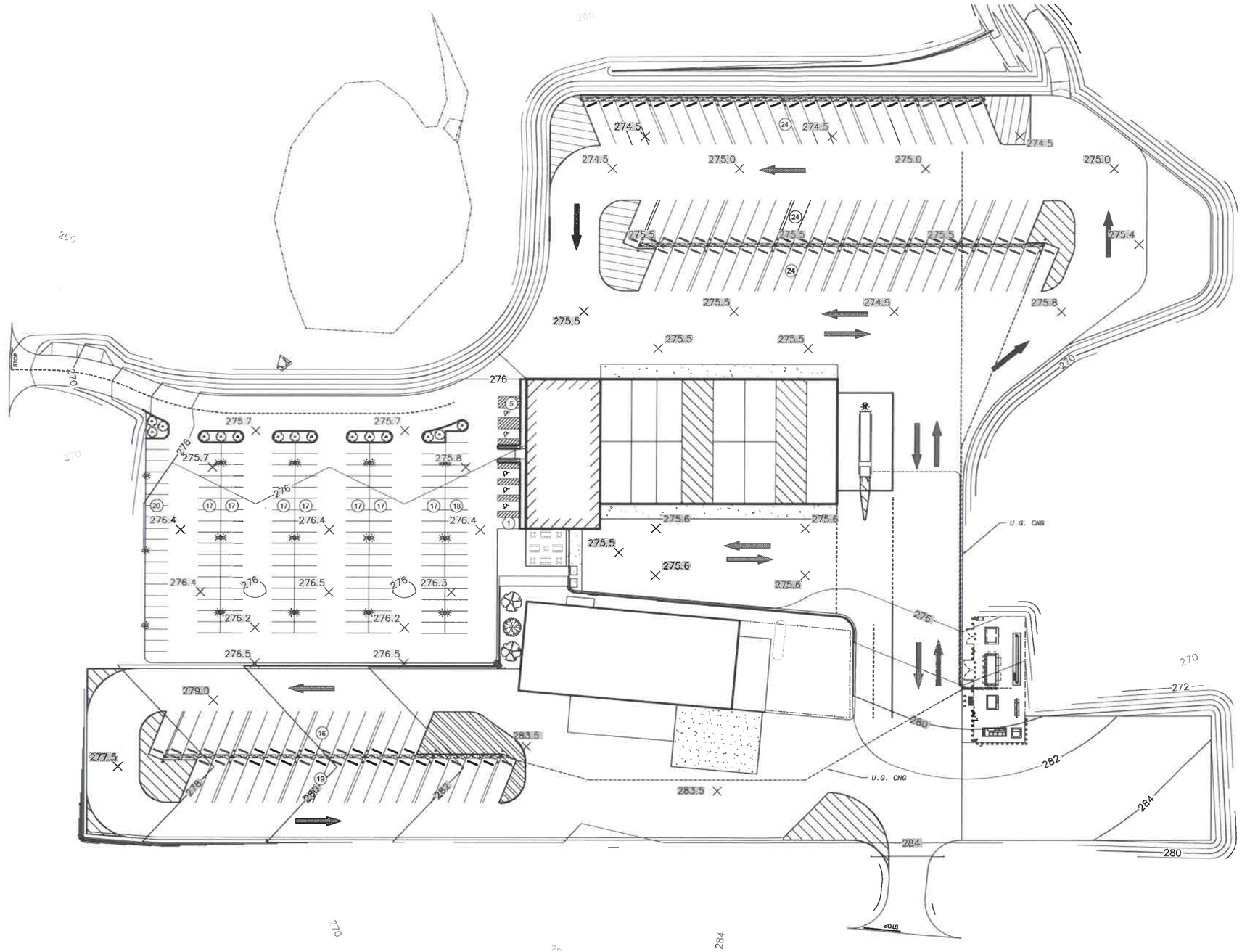

GENERAL ARRANGEMENT

SCALE: 1"= 40'-0"

GENERAL NOTES:

1. DIMENSIONS SHOWN ARE APPROXIMATE. REFER TO DETAILED DESIGN DRAWINGS AND TO CERTIFIED VENDOR DRAWINGS FOR CONFIRMATION AND ADDITIONAL INFORMATION.

2. ALL SITE IMPROVEMENTS EXISTING UNLESS NOTED OTHERWISE.

FIXTURE SCHEDULE

A	NEC CLASS I DIV 2 GROUP D RATED 88 W LED FIXTURE SUITABLE FOR OUTDOOR INSTALLATION 124 LUMENS PER WATT, 5000F COLOR TEMP, 277VAC, 1PH, CEILING MOUNT W/FLAT LENS. (OWNER FURNISHED) LSI LEGACY CRUS-SC-LED-LW-CW-UE-WHITE
B	OUTDOOR LED AREA LIGHT FIXTURE, 278 WATT, 277VAC, 1PH, TENON MTG ADAPTOR SQR POLE MOUNT, FORWARD THROW, FULL CUT-OFF, BRZ. (OWNER FURNISHED) LSI SLICE XLCM-FT-LED-HO-CW-UE-BRZ 25-FT 6" SQR POLE WITH ANCHOR BOLTS WHERE NEEDED LSI 6SQN-S07G-26-N-AB-BC-BRZ

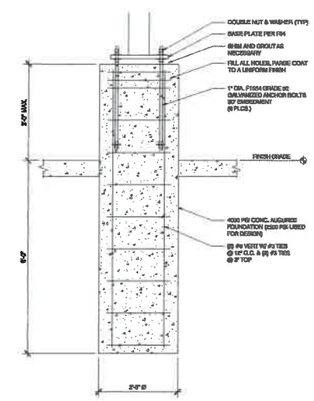

TRUSS COLUMN BASE DETAIL

SCALE: 1/2"= 1'-0"

PRELIMINARY DETAIL: FINAL DESIGN BY N.H. LICENSED PROFESSIONAL ENGINEER

1" = 40'-0"

40 0 40 80 120

STATE OF NEW HAMPSHIRE
THOMAS MITCHELL
No. 14269
LICENSED
PROFESSIONAL ENGINEER
EXP: 06/30/18

THE USE OF THESE DRAWINGS AND SPECIFICATIONS SHALL BE RESTRICTED TO THE ORIGINAL SITE FOR WHICH THEY WERE PREPARED, AND PUBLICATION THEREOF IS EXPRESSLY LIMITED TO SUCH USE. REPRODUCTION, IN WHOLE OR IN PART, OR PROVIDING COPIES TO ANY PERSON OR ENTITY OTHER THAN THE OWNER FOR WHOM THE WORK IS PREPARED, WITHOUT THE WRITTEN CONSENT OF T. MITCHELL ENGINEERS & ASSOCIATES, IS PROHIBITED.

CONSULTANT:

T. MITCHELL ENGINEERS & ASSOCIATES
Professional Engineers and Consultants
1424 Doolittle Drive
San Leandro, CA 94577
Phone: 510-777-0120
Fax: 510-777-0121

CLIENT:

WASTE MANAGEMENT

GENERAL ARRANGEMENT
WASTE MANAGEMENT OF NEW HAMPSHIRE, INC.
CNG VEHICLE FUELING SYSTEM
ROCHESTER, NEW HAMPSHIRE

REVISIONS:		
SET ISSUE:		DATE:
0	FOR REVIEW	

DATE: 03/27/18

PROJECT #:	1810
DRAWN BY:	TM
CHECKED BY:	
APPROVED BY:	
FILENAME:	G-1.10 REV0C.dwg

G-1.10

GENERAL NOTES:

1. DIMENSIONS SHOWN ARE APPROXIMATE. REFER TO DETAILED DESIGN DRAWINGS AND TO CERTIFIED VENDOR DRAWINGS FOR CONFIRMATION AND ADDITIONAL INFORMATION.

2. ALL SITE IMPROVEMENTS EXISTING UNLESS NOTED OTHERWISE.

3. DRAWING IS CONCEPTUAL IN NATURE AND MAY BE SUBJECT TO CHANGE DURING FINAL DESIGN PROCESS.

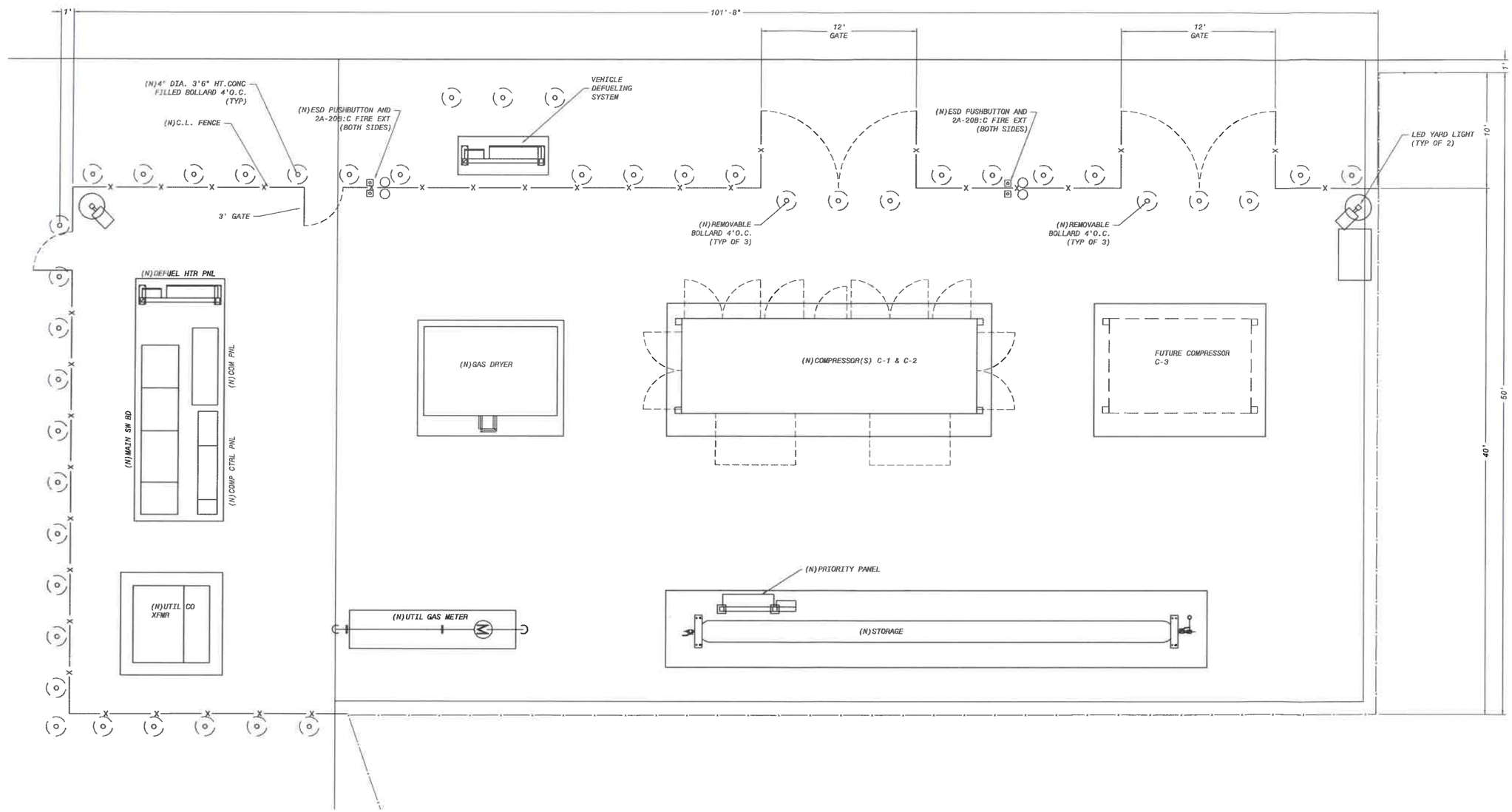

CNG EQUIPMENT AREA PLAN

SCALE: 1/4"= 1'-0"

1/4" = 1'-0"

4 0 4 8 12

STATE OF NEW HAMPSHIRE THOMAS MITCHELL No. 14280 LICENSED PROFESSIONAL ENGINEER

EXP: 06/30/18

THE USE OF THESE DRAWING AND SPECIFICATIONS SHALL BE RESTRICTED TO THE ORIGINAL SITE FOR WHICH THEY WERE PREPARED, AND PUBLICATION THEREOF FOR ANY OTHER PURPOSE, OR ANY OTHER SITE, IS EXPRESSLY PROHIBITED. REPRODUCTION OF THESE DRAWINGS OR SPECIFICATIONS IN WHOLE OR IN PART, IS PROHIBITED WITHOUT THE WRITTEN CONSENT OF THE T. MITCHELL ENGINEERS & ASSOCIATES, PC.

CONSULTANT:

T. MITCHELL ENGINEERS & ASSOCIATES, PC
Professional Engineers and Consultants
14226 Foothill Blvd
Fontana, CA 92337
Fax: 909-777-6126
Tel: 909-777-6128

CLIENT:

WASTE MANAGEMENT

GENERAL ARRANGEMENT - EQUIP COMPOUND

WASTE MANAGEMENT OF NEW HAMPSHIRE, INC.
CNG VEHICLE FUELING SYSTEM
ROCHESTER, NEW HAMPSHIRE

REVISIONS:

	SET ISSUE:	DATE:
0	FOR REVIEW	

DATE: 03/27/18

PROJECT #:	1810
DRAWN BY:	TM
CHECKED BY:	
APPROVED BY:	
FILENAME:	G-1.11 REV0.dwg

G-1.11

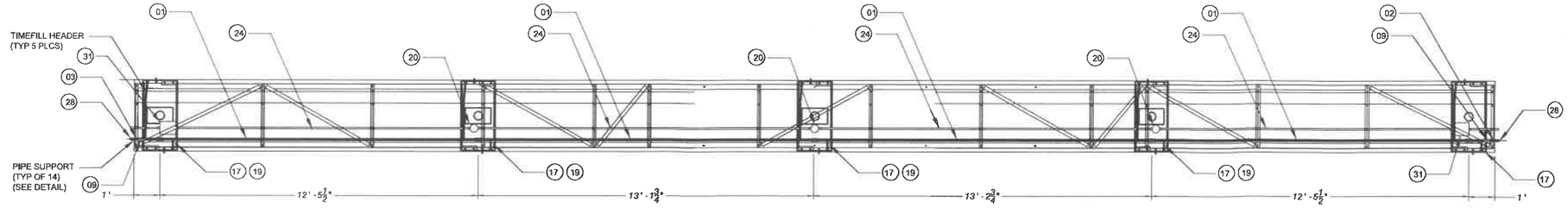

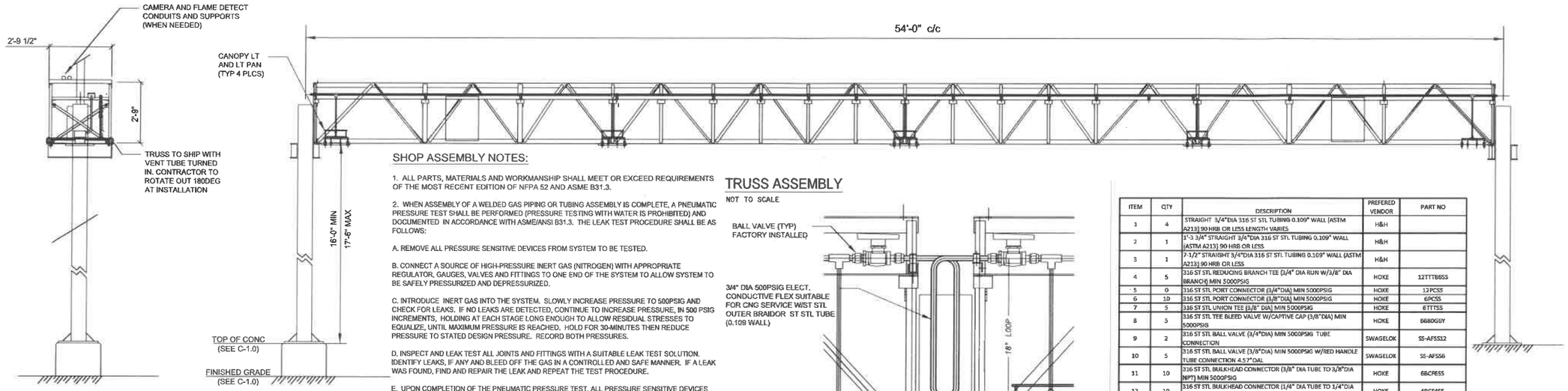

SHOP ASSEMBLY NOTES:

1. ALL PARTS, MATERIALS AND WORKMANSHIP SHALL MEET OR EXCEED REQUIREMENTS OF THE MOST RECENT EDITION OF NFPA 52 AND ASME B31.3.

2. WHEN ASSEMBLY OF A WELDED GAS PIPING OR TUBING ASSEMBLY IS COMPLETE, A PNEUMATIC PRESSURE TEST SHALL BE PERFORMED (PRESSURE TESTING WITH WATER IS PROHIBITED) AND DOCUMENTED IN ACCORDANCE WITH ASME/ANSI B31.3. THE LEAK TEST PROCEDURE SHALL BE AS FOLLOWS:

A. REMOVE ALL PRESSURE SENSITIVE DEVICES FROM SYSTEM TO BE TESTED.

B. CONNECT A SOURCE OF HIGH-PRESSURE INERT GAS (NITROGEN) WITH APPROPRIATE REGULATOR, GAUGES, VALVES AND FITTINGS TO ONE END OF THE SYSTEM TO ALLOW SYSTEM TO BE SAFELY PRESSURIZED AND DEPRESSURIZED.

C. INTRODUCE INERT GAS INTO THE SYSTEM. SLOWLY INCREASE PRESSURE TO 500PSIG AND CHECK FOR LEAKS. IF NO LEAKS ARE DETECTED, CONTINUE TO INCREASE PRESSURE, IN 500 PSIG INCREMENTS, HOLDING AT EACH STAGE LONG ENOUGH TO ALLOW RESIDUAL STRESSES TO EQUALIZE, UNTIL MAXIMUM PRESSURE IS REACHED. HOLD FOR 30-MINUTES THEN REDUCE PRESSURE TO STATED DESIGN PRESSURE. RECORD BOTH PRESSURES.

D. INSPECT AND LEAK TEST ALL JOINTS AND FITTINGS WITH A SUITABLE LEAK TEST SOLUTION. IDENTIFY LEAKS, IF ANY AND BLEED OFF THE GAS IN A CONTROLLED AND SAFE MANNER. IF A LEAK WAS FOUND, FIND AND REPAIR THE LEAK AND REPEAT THE TEST PROCEDURE.

E. UPON COMPLETION OF THE PNEUMATIC PRESSURE TEST, ALL PRESSURE SENSITIVE DEVICES SHALL BE REINSTALLED IN THE SYSTEM, THE SYSTEM PRESSURIZED TO NORMAL OPERATING PRESSURES AND THEIR CONNECTIONS TESTED FOR LEAKS.

NOTE: CONTRACTOR SHALL USE AN APPROVED LEAK DETECTION SOLUTION (SNOOP OR EQUAL) TO TEST ALL PIPE FITTINGS AND CONNECTIONS DURING TESTING AND AT START-UP (SOAP AND WATER SOLUTIONS WILL NOT BE USED).

TRUSS ASSEMBLY

NOT TO SCALE

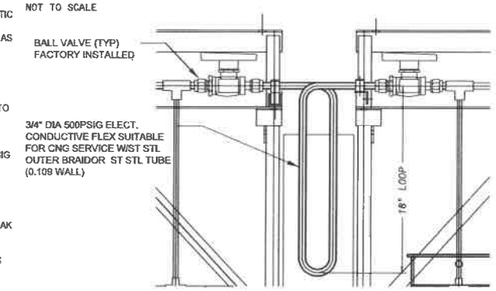

TRUSS TO TRUSS CONNECTION

1-1/2"=1'-0"

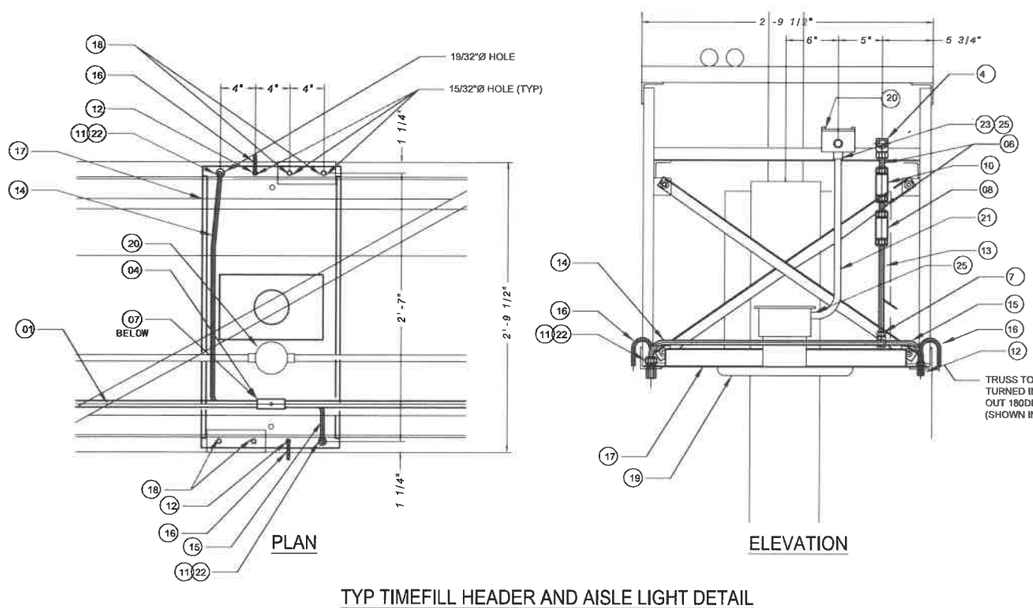

TYP TIMEFILL HEADER AND AISLE LIGHT DETAIL

1-1/2"=1'-0"

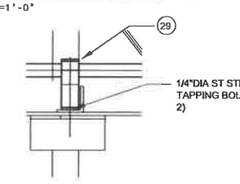

TYP TUBING SUPPORT DETAIL

3"=1'-0"

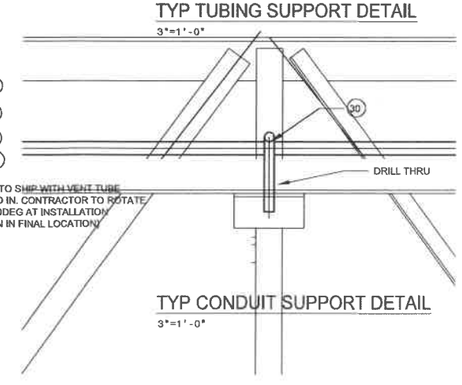

TYP CONDUIT SUPPORT DETAIL

3"=1'-0"

ITEM	QTY	DESCRIPTION	PREFERED VENDOR	PART NO
1	4	STRAIGHT 3/4"DIA 316 ST STL TUBING 0.109" WALL (ASTM A213) 90 HRB OR LESS LENGTH VARIES	H&H	
2	1	1'-3 3/4" STRAIGHT 3/4"DIA 316 ST STL TUBING 0.109" WALL (ASTM A213) 90 HRB OR LESS	H&H	
3	1	7-1/2" STRAIGHT 3/4"DIA 316 ST STL TUBING 0.109" WALL (ASTM A213) 90 HRB OR LESS	H&H	
4	5	316 ST STL REDUCING BRANCH TEE (3/4" DIA RUN W/3/8" DIA BRANCH) MIN 5000PSIG	HOKE	12TTTB6SS
5	0	316 ST STL PORT CONNECTOR (3/4"DIA) MIN 5000PSIG	HOKE	12PCSS
6	10	316 ST STL PORT CONNECTOR (3/8"DIA) MIN 5000PSIG	HOKE	6PCSS
7	5	316 ST STL UNION TEE (3/8" DIA) MIN 5000PSIG	HOKE	6TTTSS
8	5	316 ST STL TEE BLEED VALVE W/CAPTIVE CAP (3/8"DIA) MIN 5000PSIG	HOKE	6680G6DY
9	2	316 ST STL BALL VALVE (3/4"DIA) MIN 5000PSIG W/RED HANDLE TUBE CONNECTION	SWAGELOK	SS-AFSS12
10	5	316 ST STL BALL VALVE (3/8"DIA) MIN 5000PSIG W/RED HANDLE TUBE CONNECTION 4.57"OAL	SWAGELOK	SS-AFSS6
11	10	316 ST STL BULKHEAD CONNECTOR (3/8" DIA TUBE TO 3/8"DIA NPT) MIN 5000PSIG	HOKE	6BCF6SS
12	10	316 ST STL BULKHEAD CONNECTOR (1/4" DIA TUBE TO 3/4"DIA JIC) MIN 5000PSIG	HOKE	4BCF4SS
13	5	SUPPLY LINE, 3/8"DIA 316 ST STL TUBING 0.065" WALL (ASTM A213) 90 HRB OR LESS	H&H	
14	5	BRANCH SUPPLY LINE 1, 3/8"DIA 316 ST STL TUBING 0.065" WALL (ASTM A213) 90 HRB OR LESS - CUSTOM BENT	TBD	
15	5	BRANCH SUPPLY LINE 2, 3/8"DIA 316 ST STL TUBING 0.065" WALL (ASTM A213) 90 HRB OR LESS - CUSTOM BENT	TBD	
16	10	VENT LINE, 1/4"DIA 316 ST STL TUBING 0.035" MIN WALL (ASTM A213) 90 HRB OR LESS - CUSTOM BENT	TBD	
17	5	22 GA GALV SHEET METAL DECK PAN FOR IDLE AIR TRUSS	TME	22GA-DP-IA
18	20	3/8"X 1-1/4" LG GALV BOLT, NUT, (2)WASHERS AND LOCK WASHER		
19	4	80W LED CANOPY FIXTURE, 5000K, MULTI-TAP, WHITE W/SIMETRICAL DISTRIBUTION, NEC CLASS I DIV2,	LSI	LEGACY CRUS-SC-LED-LW-50-UE-WHT
20	3	1" NPT 'T' J-BOX W/GASKETTED COVER	CROUSE HINDS	TA
21	4	1/2" SEAL-TITE FLEX CONDUIT 2' LENGTH		
22	10	3/8" DIA ST STL NPT PLUG 5000PSIG	HOKE	6PPSS
23	4	1/2" TO 1" GALV CONDUIT BUSHING		
24	6	10' LG 1"DIA GALV IMC CONDUIT - THREADED. (FIELD CUT TO LENGTH)		
25	8	1/2"NPT TO 1/2" GALV SEAL-TITE CONDUIT CONNECTOR		
26		NOT USED		
27	4	1" GALV CONDUIT COUPLINGS		
28	2	3/4" 316 ST STL TUBING 90 DEG ELBOW AND PLUG 5000PSIG	HOKE	32PSS AND 12LUSS
29	14	3/4" ST STL TUBE SUPPORT KIT, SOLID (BLIND) STACKING KIT AND ELONGATED WELD PLATE	SWAGELOK	304-S3-PP-12T 304-S3-PP-BL-ST 304-S3-WPE
30	14	GALV ROUND U-BOLT W/DBL NUTS AND WASHERS 1/4"DIA X 4" LG X 1-1/8" HOOK WIDTH X 2-1/2" THREAD		
31	2	6X8X4"DP NEMA 4R SPLICE BOX W/SPLICE BLOCK(S)		SEE E-1.0

FIELD ASSEMBLY NOTES:

1. PROVIDE AND INSTALL ONE ADDITIONAL LIGHT AND LIGHT PAN, AND SEALTITE CONDUIT WITH 2 CONNECTORS (ITEMS 19 AND 17, 21,23 AND 25) ON LAST TRUSS IN RUN TO PROVIDE LIGHTING FOR LAST AISLE.

2. CONTRACTOR SHALL REMOVE TUBE ENDS AT EACH END OF TRUSS AND REPLACE WITH CONTINUOUS ST STL EXPANSION LOOP OR FLEX HOSE (SEE TRUSS TO TRUSS CONNECTION DETAIL).

3. ENTIRE ASSEMBLY SHALL BE LEAK TESTED AT 100% WORKING PRESSURE IN ACCORDANCE WITH NFPA 52 AND ASME B31.3 PRIOR TO ACCEPTANCE (SEE PRESSURE TEST INSTRUCTIONS).

CONTROLLED DRAWING - DO NOT REUSE

DRAWING REPRESENTS DESIGN INTENDED SPECIFICALLY FOR PROJECT AND LOCATION REFERENCED HEREIN AND SHOULD NOT BE COPIED, REPRODUCED, OR REUSED FOR ANY PURPOSE WITHOUT THE EXPRESS WRITTEN AUTHORIZATION OF T. MITCHELL ENGINEERS.

STATE OF NEW HAMPSHIRE
THOMAS MITCHELL
No. 14807
LICENSED
PROFESSIONAL ENGINEER
EXP: 06/30/18

THE USE OF THESE DRAWINGS AND SPECIFICATIONS SHALL BE RESTRICTED TO THE ORIGINAL SITE FOR WHICH THEY WERE PREPARED, AND PUBLICATION, REPRODUCTION, MODIFICATION OR PUBLICATION, IN WHOLE OR IN PART, IS PROHIBITED WITHOUT THE WRITTEN CONSENT OF THE T. MITCHELL ENGINEERS, INC. AND WASTE MANAGEMENT.

CONSULTANT:

T. MITCHELL ENGINEERS & ASSOCIATES
Professional Engineers and Consultants
1420a Mendocino Drive
San Leandro, CA 94577
Phone: 510-777-0321
Fax: 510-777-0323

CLIENT:

WASTE MANAGEMENT

TRUSS UP-FIT

WASTE MANAGEMENT OF NEW HAMPSHIRE, INC.
CNG VEHICLE FUELING SYSTEM
ROCHESTER, NEW HAMPSHIRE

REVISIONS:

SET ISSUE:	DATE:
0 FOR REVIEW	

DATE: 03/27/18

PROJECT #:	1810
DRAWN BY:	TM
CHECKED BY:	
APPROVED BY:	
FILENAME:	P-1.0 Rev0.dwg

P-1.0

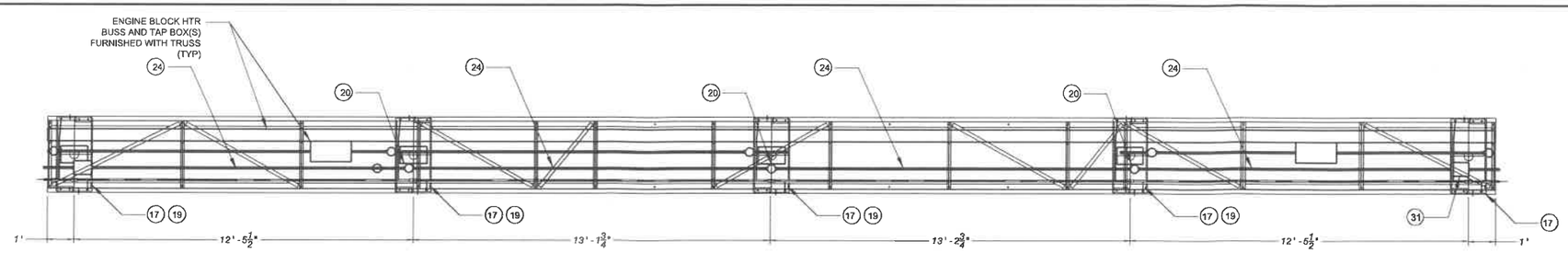

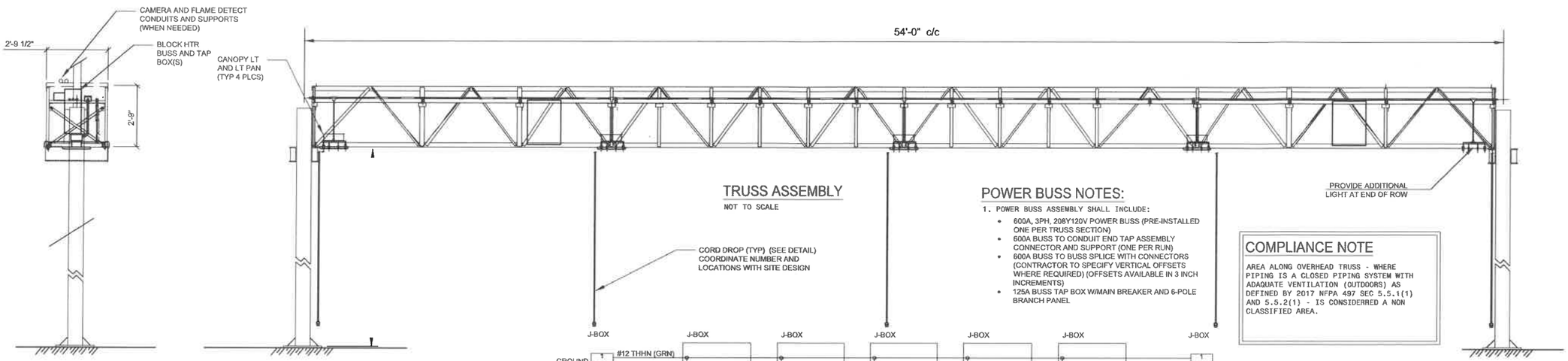

TRUSS ASSEMBLY

NOT TO SCALE

POWER BUSS NOTES:

1. POWER BUSS ASSEMBLY SHALL INCLUDE:
   - 600A, 3PH, 208Y120V POWER BUSS (PRE-INSTALLED ONE PER TRUSS SECTION)
   - 600A BUSS TO CONDUIT END TAP ASSEMBLY CONNECTOR AND SUPPORT (ONE PER RUN)
   - 600A BUSS TO BUSS SPLICE WITH CONNECTORS (CONTRACTOR TO SPECIFY VERTICAL OFFSETS WHERE REQUIRED) (OFFSETS AVAILABLE IN 3 INCH INCREMENTS)
   - 125A BUSS TAP BOX W/MAIN BREAKER AND 6-POLE BRANCH PANEL

COMPLIANCE NOTE

AREA ALONG OVERHEAD TRUSS - WHERE PIPING IS A CLOSED PIPING SYSTEM WITH ADAQUATE VENTILATION (OUTDOORS) AS DEFINED BY 2017 NFPA 497 SEC 5.5.1(1) AND 5.5.2(1) - IS CONSIDERRED A NON CLASSIFIED AREA.

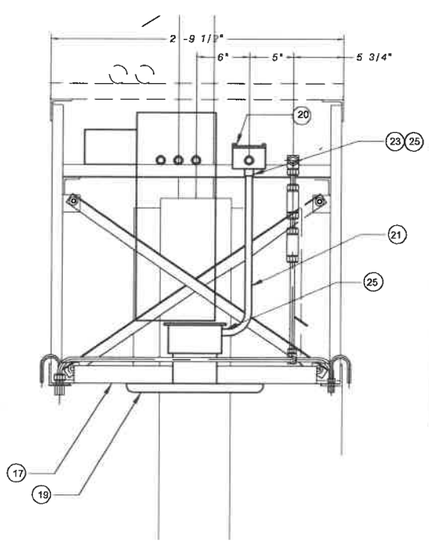

TRUSS DETAIL

1-1/2"=1'-0"

SEE P-1.0 FOR NUMBERED ITEMS

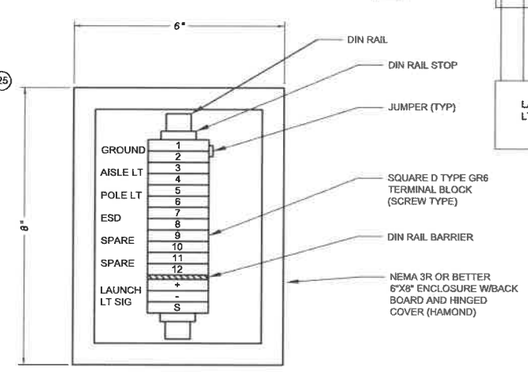

J-BOX DETAIL

6"=1'-0"

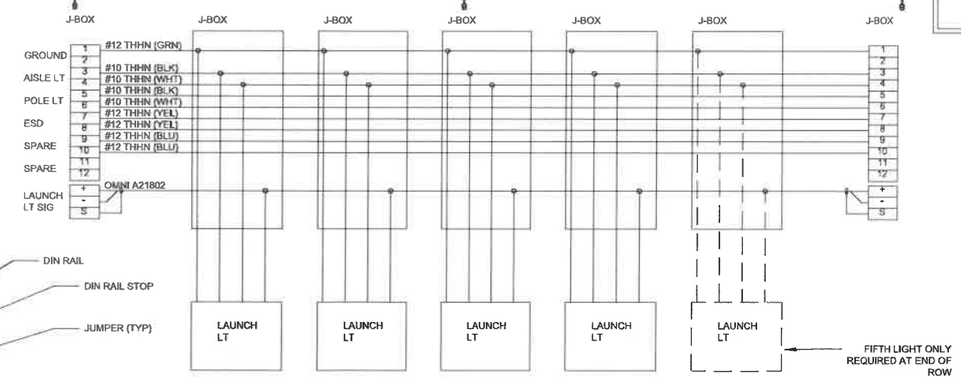

CONNECTION DIAGRAM

NTS

NOTE: SITE DESIGNER SHALL CONFIRM CIRCUIT LOADING AND VOLTAGE DROPS DO NOT EXCEED CAPABILITY OF CONDUCTORS FURNISHED

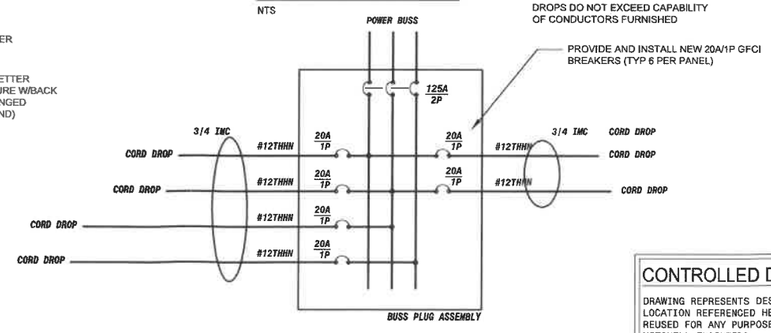

BLOCK HTR CIRC DIAGRAM

NTS

NOTE: QTY OF CORD DROPS MAY VARY. COORDINATE WITH SITE DESIGN)

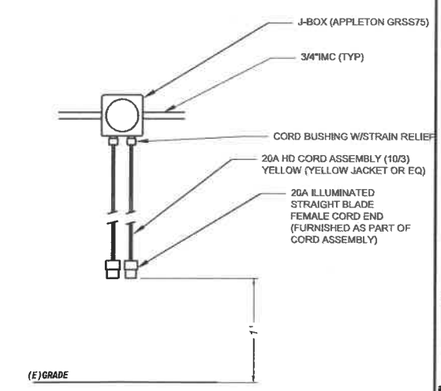

CORD DROP DETAIL

1-1/2"=1'-0"

NOTE: REFER TO SITE DESIGN FOR NUMBER OF CORD DROPS REQ'D

CONTROLLED DRAWING - DO NOT REUSE

DRAWING REPRESENTS DESIGN INTENDED SPECIFICALLY FOR PROJECT AND LOCATION REFERENCED HEREIN AND SHOULD NOT BE COPIED, REPRODUCED, OR REUSED FOR ANY PURPOSE WITHOUT THE EXPRESS WRITTEN AUTHORIZATION OF T. MITCHELL ENGINEERS.

STATE OF NEW HAMPSHIRE THOMAS MITCHELL No. 14290 LICENSED PROFESSIONAL ENGINEER
EXP: 06/30/18

THE USE OF THESE DRAWINGS AND SPECIFICATIONS SHALL BE RESTRICTED TO THE ORIGINAL USE FOR WHICH THEY WERE PREPARED. REPRODUCTION, MODIFICATION OR PUBLICATION, IN WHOLE OR IN PART, IS PROHIBITED WITHOUT THE WRITTEN CONSENT OF THE T. MITCHELL ENGINEERS, INC. AND WASTE MANAGEMENT.

CONSULTANT:

T. MITCHELL ENGINEERS & ASSOCIATES
Professional Engineers and Consultants
14250 Doolittle Drive
San Leandro, CA 94577
Phone: 510-777-0326
Fax: 510-777-0328

CLIENT:

WASTE MANAGEMENT

TRUSS UP-FIT - ELECTRICAL

WASTE MANAGEMENT OF NEW HAMPSHIRE, INC.
CNG VEHICLE FUELING SYSTEM
ROCHESTER, NEW HAMPSHIRE

REVISIONS:

SET ISSUE:		DATE:
0	FOR REVIEW	

DATE: 03/27/18

PROJECT #:	1810
DRAWN BY:	TM
CHECKED BY:	
APPROVED BY:	
FILENAME:	E-1.0 Rev0.dwg

E-1.0

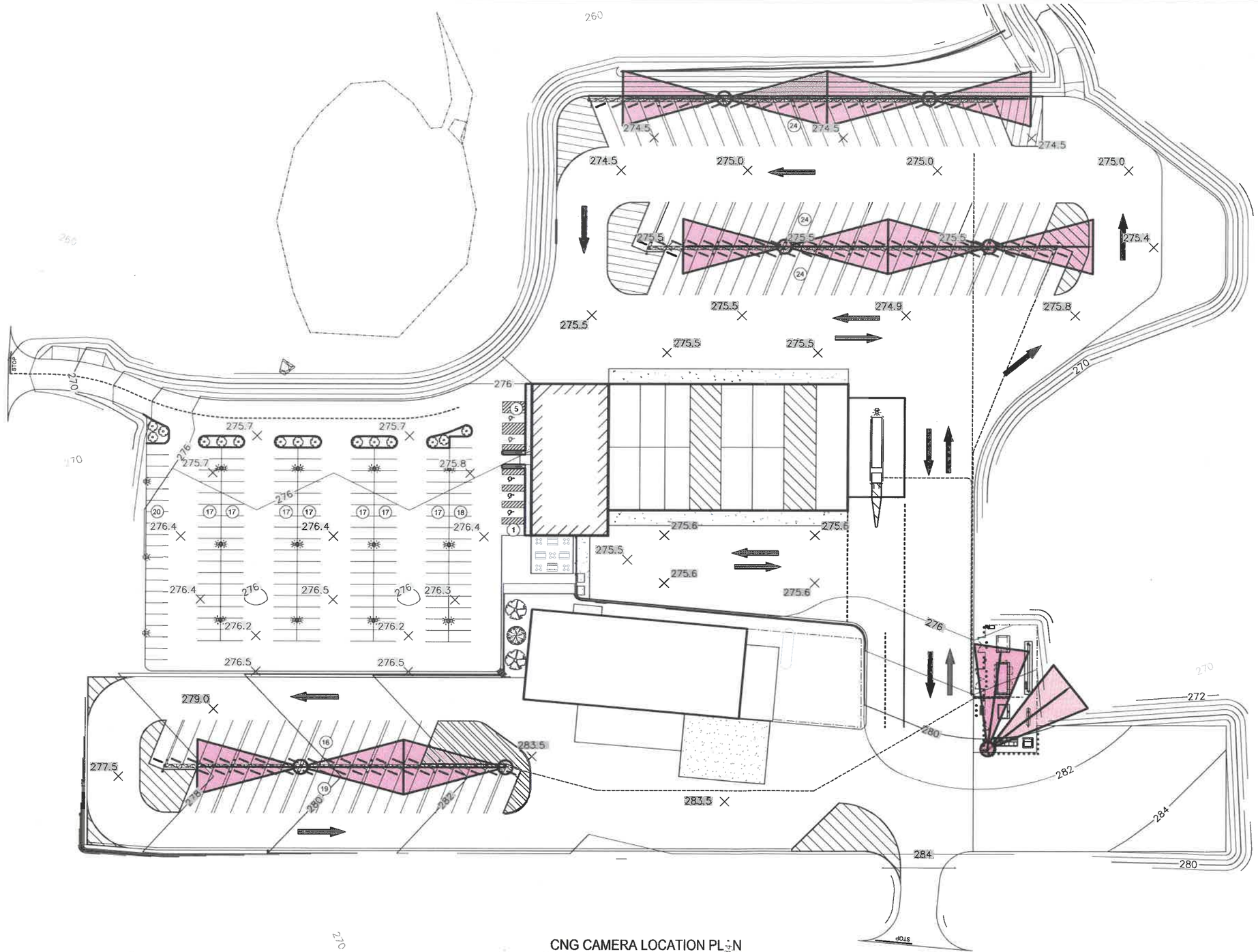

CNG CAMERA LOCATION PLAN

SCALE: 1"= 40'-0"

1" = 40'-0"

40 0 40 80 120

THE USE OF THESE DRAWINGS AND SPECIFICATIONS SHALL BE RESTRICTED TO THE ORIGINAL USE FOR WHICH THEY WERE PREPARED. REUSE, REPRODUCTION, OR PUBLICATION, IN WHOLE OR IN PART, IS PROHIBITED WITHOUT THE WRITTEN CONSENT OF T. MITCHELL ENGINEERS.

REV.	DESCRIPTION	BY	DATE
0	FOR CLIENT REVIEW	TM	03/28/18

WASTE MANAGEMENT
ROCHESTER, NH

T. MITCHELL ENGINEERS
SAN LEANDRO, CALIFORNIA

SCALE	FOR: CNG FUELING SYSTEM
DATE	
DRWN	
CHECKED	TITLE: CNG CAMERA PLAN
APPROVED	
JOB: 1811	DWG. NO.: SK-1

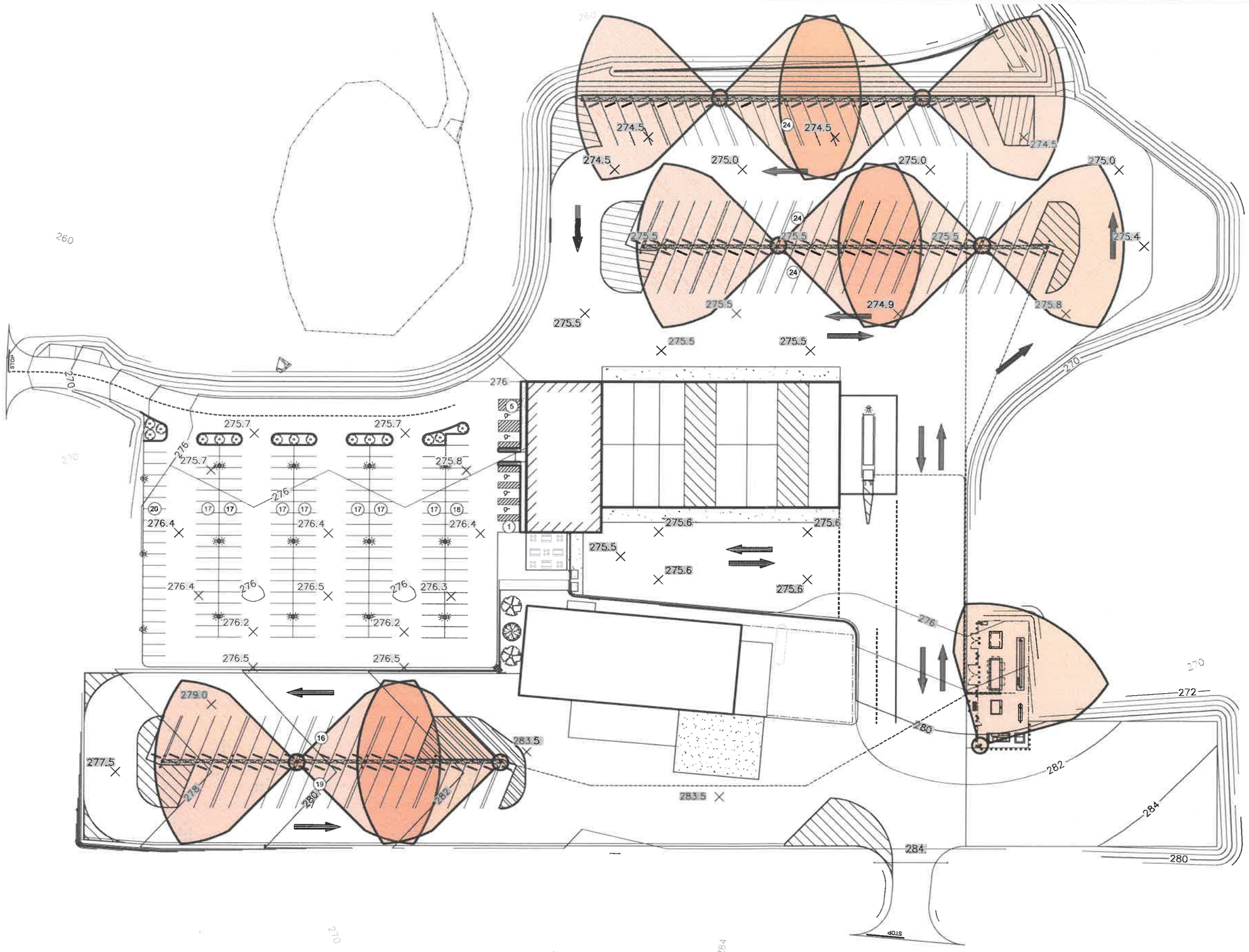

CNG FLAME DETECTOR PLAN

SCALE: 1"= 40'-0"

1" = 40'-0"

40 0 40 80 120

THE USE OF THESE DRAWINGS AND SPECIFICATIONS SHALL BE RESTRICTED TO THE ORIGINAL USE FOR WHICH THEY WERE PREPARED. REUSE, REPRODUCTION, OR PUBLICATION, IN WHOLE OR IN PART, IS PROHIBITED WITHOUT THE WRITTEN CONSENT OF T. MITCHELL ENGINEERS.

REV.	DESCRIPTION	BY	DATE
0	FOR CLIENT REVIEW	TM	03/28/18

WASTE MANAGEMENT
ROCHESTER, NH

T. MITCHELL ENGINEERS
SAN LEANDRO, CALIFORNIA

SCALE
DATE
DRWN
CHECKED
APPROVED
JOB 1811

FOR CNG FUELING SYSTEM

TITLE CNG FLAME DETECTORS

DWG. NO. SK-2