TABLE OF CONTENTS:

SHEET 1 – NEIGHBORHOOD PLAN
SHEET 2 – GENERAL PLAN NOTES
SHEET 3 – EXISTING CONDITIONS PLAN
SHEET 4 – SITE PLAN
SHEET 5 – GRADING & DRAINAGE PLAN
SHEET 6 – SLIP LANE & WIDENED SHOULDER
SHEET 7 – UTILITY DESIGN
SHEET 8 – SEDIMENT & EROSION CONTROL PLAN
SHEET 9 – LANDSCAPING PLAN
SHEET 10 – LIGHTING PLAN
SHEET 11 – E101 EROSION CONTROL DETAILS
SHEET 12 – E102 EROSION CONTROL DETAILS
SHEET 13 – D101 DRAINAGE DETAILS
SHEET 14 – C101 CONSTRUCTION DETAILS
SHEET 15 – C102 CONSTRUCTION DETAILS
SHEET 16 – C103 CONSTRUCTION DETAILS
SHEET 17 – U101 UTILITY DETAILS
SHEET 18 – L101 LANDSCAPING DETAILS
SHEET 19 – R101 RAIN GARDEN #1 DETAILS
SHEET 20 – R102 RAIN GARDEN #2 DETAILS

PROPOSED SITE PLAN FOR 21 FARMINGTON ROAD, LLC 21 FARMINGTON ROAD ROCHESTER, N.H. TAX MAP 216, LOT 29

RECEIVED
JAN 19 2016
Planning Dept.

OWNER: 21 FARMINGTON ROAD, LLC
549 US HIGHWAY 1 BYP
PORTSMOUTH, NH 03801-4131

DEVELOPER: 21 FARMINGTON ROAD, LLC
549 US HIGHWAY 1 BYP
PORTSMOUTH, NH 03801-4131

SURVEYOR OF RECORD: KENNETH A. BERRY, PE, LLS
CPESC, CESSWI
BERRY SURVEYING & ENGINEERING
335 CROWN POINT ROAD
BARRINGTON, NH 03825
(603) 332-2863

ENGINEER OF RECORD: KENNETH A. BERRY, PE, LLS
CPESC, CESSWI
BERRY SURVEYING & ENGINEERING
335 CROWN POINT ROAD
BARRINGTON, NH 03825
(603) 332-2863

WETLAND SCIENTIST: DAMON E. BURT, CWS #163
FRAGGLE ROCK ENVIRONMENTAL SERVICES
38 GARLAND ROAD
STRAFFORD, NH 03884
(603) 969-5574

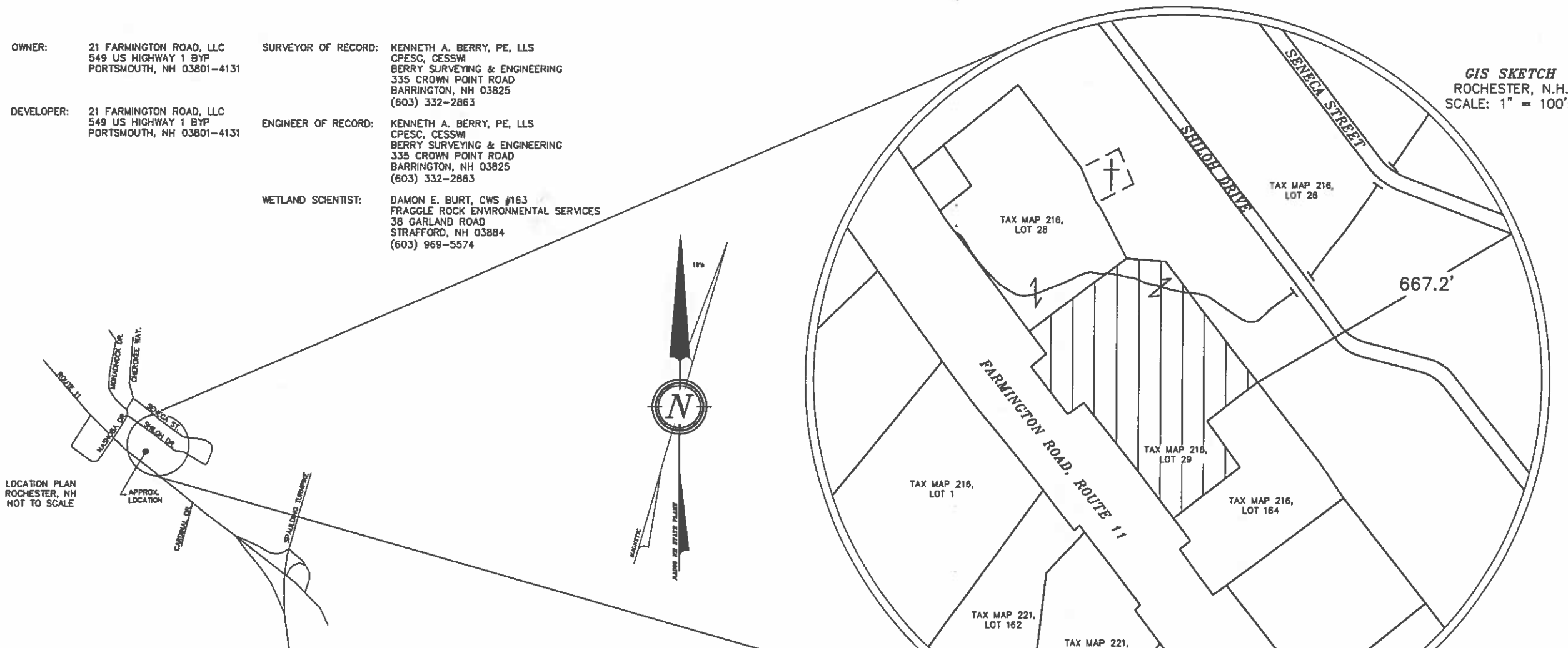

REQUIRED PERMITS:

NOI ~ SWPPP ~ TO BE ON FILE 3 WEEKS BEFORE CONSTRUCTION

BERRY SURVEYING & ENGINEERING CAN PROVIDE THE SWPPP AND THE FILING OF THE NOTICE OF INTENT WHICH IS REQUIRED BY THE EPA. A CAPABLE AND KNOWLEDGEABLE PERSON IS TO DO ON-SITE EROSION CONTROL INSPECTIONS PER THE NOTICE OF INTENT. BERRY SURVEYING & ENGINEERING CAN PROVIDE THIS SERVICE IF REQUESTED.

A PRE-CONSTRUCTION MEETING IS REQUIRED BEFORE CONSTRUCTION ACTIVITIES TAKE PLACE. THOSE PRESENT SHOULD INCLUDE THE OWNER OF RECORD, DESIGN ENGINEER, CONSTRUCTION MANAGER, CITY ENGINEER OR DESIGNEE, AND HEAD OF THE PLANNING DEPARTMENT OR DESIGNEE.

NOTE:

BERRY SURVEYING & ENGINEERING HAS PREPARED AN INSPECTION & MAINTENANCE MANUAL AS PART OF THIS PROJECT'S DOCUMENTATION. ALL USERS ARE BOUND TO THIS DOCUMENT AS PART OF THE APPROVAL OF THE PLANNING BOARD. COPIES OF THE YEARLY INSPECTIONS ARE TO BE DELIVERED TO THE CEO AS DIRECTED IN THE MANUAL.

GENERAL PLAN SET NOTES:

1.) 11x17" PLANS ARE HALF THE PUBLISHED SCALE.

2.) ALL PLANS ARE CONSIDERED TO BE NOT FOR CONSTRUCTION UNLESS THEY CONTAIN THE APPROVAL STAMP OF THE CITY OF ROCHESTER.

3.) FOR MORE INFORMATION ABOUT THIS SUBDIVISION, CONTACT THE CITY OF ROCHESTER PLANNING DEPARTMENT, 31 WAKEFIELD STREET, ROCHESTER, NH 03867, (603) 335-1338.

FINAL APPROVAL
BY
ROCHESTER PLANNING BOARD
CERTIFIED BY : [signature]
DATE : 3/3/16

STATE OF NEW HAMPSHIRE
No. 605
KENNETH A. BERRY
LICENSED LAND SURVEYOR

ROCHESTER PLANNING # 216-29-GRD-2015

REVISION	DATE	DESCRIPTION
6A	1-13-16	PER NHDOT DRIVEWAY PERMIT & FINAL REVIEW
5	8-04-15	REVISION FOR "B" ACCESS & SLIP LANE
4	5-22-15	PER N.O.D. AND CONDITIONS OF APPROVAL
3	4-28-15	PER ROCHESTER TRC REVIEW
2	4-08-15	POST-APPLICATION TECHNICAL REVISIONS

PROPOSED SITE PLAN
FOR
21 FARMINGTON ROAD, LLC
21 FARMINGTON ROAD, ROUTE 11
ROCHESTER, N.H.
TAX MAP 216, LOT 29

BERRY SURVEYING & ENGINEERING
335 SECOND CROWN POINT ROAD
BARRINGTON, NH 03825 (332-2863)

SCALE : AS-NOTED
DATE : MARCH 30, 2015
FILE NO. : DB 2014-149

STATE OF NEW HAMPSHIRE
KENNETH A. BERRY
No. 14243
LICENSED PROFESSIONAL ENGINEER

LEGEND:

- IRON BOUND ~TBS~
- IRON BOUND ~FND~
- GRANITE BOUND ~FND~
- STONE BOUND ~FND~
- UTILITY POLE
- GUY WIRE
- CURB STOP
- GATE VALVE
- GAS VALVE
- FIRE HYDRANT
- CATCH BASIN
- SEWER MAN HOLE
- SINGLE POST SIGN
- POLE LIGHT
- TESTPIT
- TREE
- BUILDING SETACK LINE
- EASEMENT LINE
- GAS LINE
- WATER LINE
- SEWER LINE
- OVERHEAD UTILITYS
- HIGHWAY FENCE
- SOILS LINE
- 255 MAJOR CONTOUR LINE
- MINOR CONTOUR LINE
- R.O.W. LINE
- ABUTTING LOT LINES
- ×252.9 SPOT ELEVATION
- 50' WETLAND BUFFER
- 41 EXISTING CONTOUR MINOR
- 40 EXISTING CONTOUR MAJOR
- PROPOSED CONTOUR MINOR
- PROPOSED CONTOUR MAJOR
- PROPOSED CULVERT W/ FLARED END SECTION (F.E.S.)
- F100 DETAIL SHEET / DETAIL
- PROPOSED & EXISTING TREELINE
- RIP-RAP APRON
- PROPOSED CENTER LINE
- UGE PROPOSED UNDERGROUND UTILITY
- U.D. PROPOSED UNDER DRAIN (U.D.)
- PROPOSED TRANSFORMER / JUNCTION BOX
- EXISTING SECTOR CABINET AND ELECTRIC MANHOLE

ABBREVIATION LEGEND:

S.G.C.	SLOPED GRANITE CURB
V.G.C.	VERTICAL GRANITE CURB
E.O.P.	EDGE OF PAVEMENT
B.C.C.	BITUMINOUS CONCRETE CURB
BITUM.	BITUMINOUS
E.O.P.	EDGE OF PAVEMENT
TYP.	TYPICAL
T. BLOCK	THRUST BLOCK
CONC.	CONCRETE
U.G.E.	UNDER GROUND ELECTRIC / UTILITY
U.D.	UNDER DRAIN
F.E.S.	FLARED END SECTION
HDPE	HIGH DENSITY POLYETHYLENE
RCP	REINFORCED CONCRETE PIPE
F.G.	FINISHED GRADE
E.G.	EXISTING GRADE
T.W.	TRAVELED WAY

- SSL { } ~ [SIZE] SINGLE SOLID LINE (COLOR W=WHITE, Y=YELLOW)
- DSL { } ~ [SIZE] DOUBLE SOLID LINE (COLOR W=WHITE, Y=YELLOW)
- SSB { } ~ [SIZE] SINGLE SOLID W/ BROKEN LINE (COLOR W=WHITE, Y=YELLOW)
- SBL { } ~ [SIZE] SINGLE BROKEN LINE (COLOR W=WHITE, Y=YELLOW)
- DBL { } ~ [SIZE] DOUBLE BROKEN LINE (COLOR W=WHITE, Y=YELLOW)

N

MAGNETIC

MAINE TO STATE PLANE

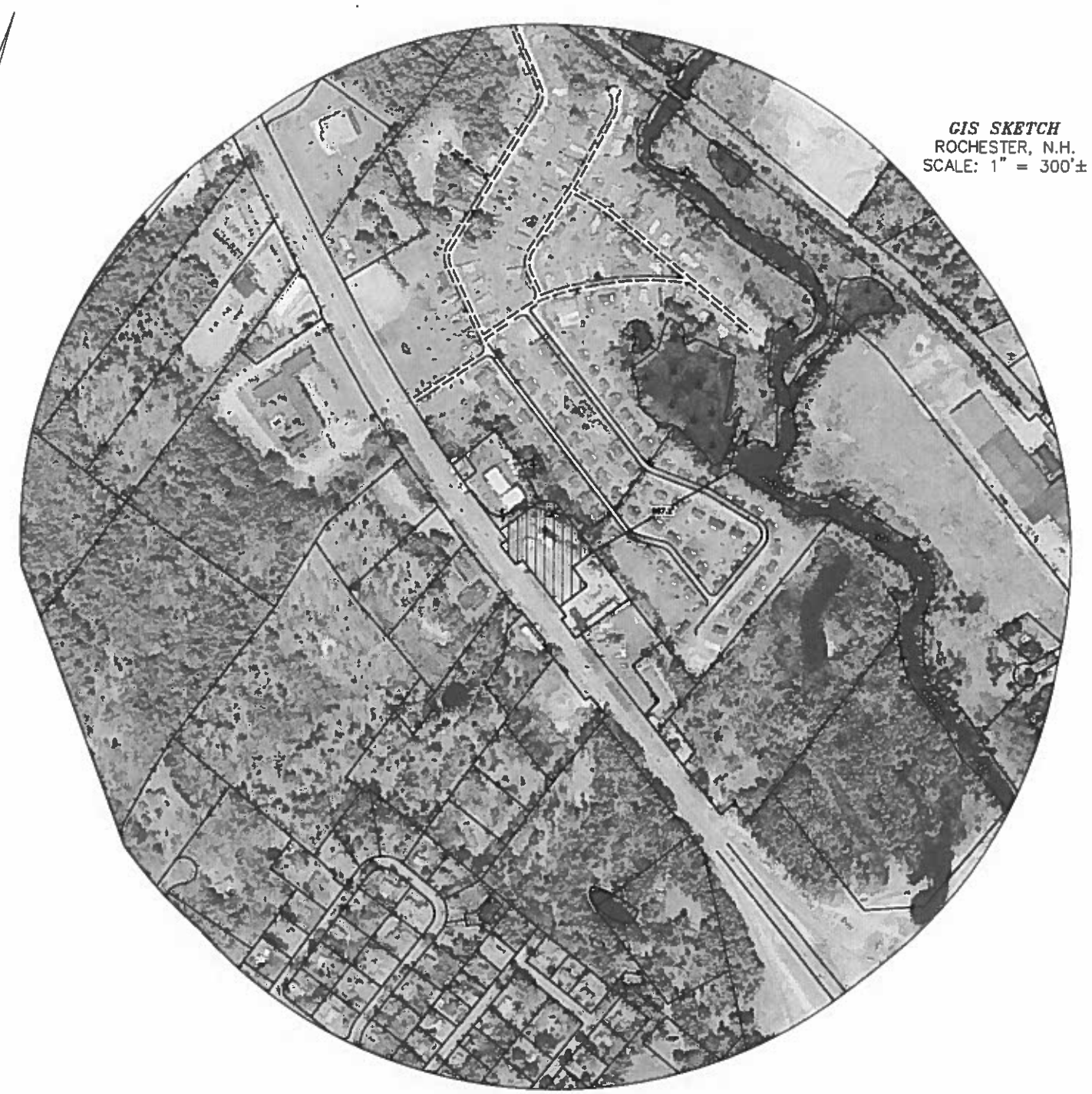

GIS SKETCH
ROCHESTER, N.H.
SCALE: 1" = 300'±

SIGN ID NUMBER	SIGN SIZE (WIDTH x HEIGHT)	SIGN	TEXT DIMENSIONS	NO. OF SIGNS	BACKGROUND	LEGEND	BORDER	POST SIZE & QUANTITY	UNIT AREA	AREA (Sq.Ft.)
R1-1	30"x30"	STOP	SEE STANDARD HIGHWAY SIGNS 2004 EDITION PUBLISHED BY USDOT – FHWA	2	RED	WHITE	WHITE	U-CHANNEL (1)	6.25	6.25
R7-8	30"x30"	RESERVED PARKING R7-8	SEE STANDARD HIGHWAY SIGNS 2004 EDITION PUBLISHED BY USDOT – FHWA	4	WHITE	BLACK	BLACK	U-CHANNEL (1)	6.25	6.25
R5-1A	15"x30"	WRONG WAY	SEE STANDARD HIGHWAY SIGNS 2004 EDITION PUBLISHED BY USDOT – FHWA	1	WHITE	BLACK	WHITE	U-CHANNEL (1)	6.25	6.25
R7-1	30"x30"	NO PARKING ANY TIME	SEE STANDARD HIGHWAY SIGNS 2004 EDITION PUBLISHED BY USDOT – FHWA	10	WHITE	BLACK	BLACK	U-CHANNEL (1)	6.25	6.25
R5-1	30"x30"	DO NOT ENTER	SEE STANDARD HIGHWAY SIGNS 2004 EDITION PUBLISHED BY USDOT – FHWA	1	WHITE	BLACK	BLACK	U-CHANNEL (1)	6.25	6.25
W11A-2	30"x30"		SEE STANDARD HIGHWAY SIGNS 2004 EDITION PUBLISHED BY USDOT – FHWA	1	YELLOW	BLACK	BLACK	U-CHANNEL (1)	6.25	6.25

PLAN REFERENCES:

1.) "PROPOSED SITE REVIEW FOR MARC MOTORS, ROUTE 11, ROCHESTER NH"
BY: BERRY SURVEYING & ENGINEERING
DATED: NOVEMBER 9, 1995
FILE #1995-83

2.) "PROPOSED RETAIL OUTLET RENE & WAYNE CARDINAL, ROUTE 11, ROCHESTER, NH"
BY: BERRY SURVEYING & ENGINEERING
DATED: APRIL 2, 1996
FILE # 1996-52

3.) "LEON J. CARDINAL LOT, ROCHESTER, NH"
BY: NEW ENGLLAND FORESTRY FOUNDATION
D.R. POPPEMA SURVEYOR
DATED: NOVEMBER 1972
ROCHESTER PLAN # 38 POCKET 6 FOLDER 3

4.) "PLAN OF LAND OF RICHARD L. COUSINEAU ROUTE 11, ROCHESTER NH"
BY: BERRY CONST. CO.
DATED: FEBRUARY 5, 1975
FILE # 1975-019

5.) "PROPOSED 2 BEDROOM RESIDENCE CARDINALS SEAFARER RESTAURANT, ROUTE 11, ROCHESTER NH"
BY: BERRY SURVEYING & ENGINEERING
DATED: APRIL, 1986, FILE # 1986-74

6.) "PROPOSED LOT LINE REVISION RENE CARDINAL & WAYNE CARDINAL, ROUTE 11, ROCHESTER NH"
BY: BERRY SURVEYING & ENGINEERING
DATED: DECEMBER 8, 1986, S.C.R.D. PLAN # 30A-85

7.) PROPOSED BOUNDARY LINE ADJUSTMENT
FOR CARDINALS SEAFARER RESTAURANT INC.
AND BGF-A LLC, ROCHESTER, NH
TAX MAP 216, LOT 29 & TAX MAP 221, LOT 184
BY: BERRY SURVEYING & ENGINEERING
DATED: DECEMBER 11, 2011
FILE #DB 2011-154, S.C.R.D. PLAN # 103-048

8.) NHDOT PLANS F 022-1(1), SHEET 19, 1958
NH ROUTE 11 – HENRY WILSON HIGHWAY
ON FILE AT NHDOT, HAZEN DRIVE, CONCORD, NH

ROCHESTER PLANNING # 216-29-GRD-2015

REVISION	DATE	DESCRIPTION
6A	1-13-16	PER NHDOT DRIVEWAY PERMIT & FINAL REVIEW
6	8-04-15	REDESIGN FOR 30' ACCESS EASEMENT
5	5-22-15	PER N.O.D. AND CONDITIONS OF APPROVAL
4	5-20-15	PER REVISED TRC REVIEW
3	4-08-15	POST-APPLICATION TECHNICAL REVISIONS

2000' NEIGHBORHOOD PLAN
FOR
21 FARMINGTON ROAD, LLC
21 FARMINGTON ROAD, ROUTE 11
ROCHESTER, N.H.
TAX MAP 216, LOT 29

BERRY SURVEYING & ENGINEERING
335 SECOND CROWN POINT ROAD
BARRINGTON, NH 03825 (332-2863)

SCALE : AS-NOTED
DATE : MARCH 30, 2015
FILE NO. : DB 2014-149

STATE OF NEW HAMPSHIRE
KENNETH A. BERRY
No. 14243
LICENSED
PROFESSIONAL ENGINEER

NOTES:

1.) THE INTENT OF THIS PLAN SET IS TO DEMONSTRATE THE EXISTING CONDITIONS OF TAX MAP 216, LOT 29 AND DETAILS FOR THE PROPOSED RE-CONSTRUCTION OF A USE CAR SALES LOT AND REVISED PARKING, DRAINAGE, AND UTILITIES.

2.) CURRENT OWNER: 21 FARMINGTON ROAD LLC
549 US HIGHWAY 1 BYP.
PORTSMOUTH, NH 03801

3.) THE PROJECT PARCEL IS LOT NO. 216, MAP 29 OF THE CITY OF ROCHESTER TAX ASSESSOR'S MAPS.

4.) THE PROJECT PARCEL CONTAINS 2.15 ACRES OR 93,632 SQUARE FEET AREA OF LAND.

5.) TITLE REFERENCE FOR THE PROJECT PARCEL IS THE STRAFFORD COUNTY REGISTRY OF DEEDS, (S.C.R.D.) BOOK NO. 4248 PAGE NO. 628

6.) LOCUS PARCEL IS SUBJECT TO EASEMENTS AS NOTED.

7.) ZONING: GRD -GRANITE RIDGE DEVELOPMENT
SETBACKS:
FRONTAGE: 50 FEET, MINIMUM
MIN. LOT AREA: NO REGULATION
MAX. LOT COVERAGE: NO REGULATION
FRONT SETBACK: NO REGULATION
SIDE SETBACK: NO REGULATION
REAR SETBACK: NO REGULATION
PAVEMENT SETBACKS:
FRONT PAVEMENT: 10 FEET
SIDE PAVEMENT: 5 FEET
REAR PAVEMENT: 10 FEET
CONSERVATION OVERLAY DISTRICT
WETLAND BUFFER: 50 FEET
AQUIFER PROTECTION OVERLAY DISTRICT

9.) PROPERTY LINE INFORMATION HAS BEEN OBTAINED FROM A SURVEY PERFORMED BY BERRY SURVEYING & ENGINEERING IN DECEMBER 2014 WITH AN ERROR OF CLOSURE GREATER THAN 1 IN 10,000.

10.) UNDERGROUND UTILITY LOCATIONS ARE BASED UPON BEST AVAILABLE EVIDENCE AND ARE NOT FIELD VERIFIED. LOCATING AND PROTECTING ANY ABOVE AND BELOW GROUND UTILITIES IS THE SOLE RESPONSIBILITY OF THE CONTRACTOR. ANY UTILITY CONFLICTS SHOULD BE REPORTED IMMEDIATELY TO THE DESIGN ENGINEER.

11.) I HEREBY CERTIFY THAT, TO THE BEST OF MY KNOWLEDGE & BELIEF, THIS PARCEL DOES NOT FALL WITHIN THE FLOOD PLAIN FLOOD HAZARD REF.: FEMA COMMUNITY# -330150, MAP# - 33017C0184D, DATED: MAY 17, 2005 & FEMA COMMUNITY# -330150, MAP# - 33017C0203D, DATED: MAY 17, 2005

12.) SEE THE EXISTING CONDITIONS PLANS FOR LOCATIONS OF ON SITE WETLANDS.

13.) 17 PARKING SPACES ARE REQUIRED BY THE PROPOSED USE. 18 PARKING SPACES ARE PROVIDED BY THIS PLAN. (SEE PARKING CALCULATIONS ON SHEET 4.)

14.) AS-BUILT PLANS OF THE SITE SHALL BE SUBMITTED ON A REPRODUCIBLE MYLAR MEDIUM AND IN A DIGITAL DXF FORMAT ON DISK TO THE CITY OF ROCHESTER GIS OFFICE UPON COMPLETION OF PROJECT. AS-BUILT PLANS SHALL BE PREPARED AND CERTIFIED CORRECT BY A L.L.S. OR P.E.

15.) EXTERIOR LIGHTING SHALL BE CUT-OFF TYPE FIXTURES AND SHALL PROVIDE LIGHTING DIRECTED ON-SITE ONLY.

16.) TOPOGRAPHIC SURVEY PERFORMED BY BERRY SURVEYING & ENGINEERING IN 2014.

17.) DATUM: PROJECT DATUM IS BASED ON GPS COORDINATES ESTABLISHED WITH A TOPCON HIPER SR RECEIVER IN JUNE 2014 AND REPRESENTED IN NEW HAMPSHIRE STATE PLANE COORDINATES NAD 1983 AND VERTICALLY BY NAVD 1988.

18.) THE PROPOSED STRUCTURE DOES NOT NEED TO BE SERVED BY A SPRINKLER SYSTEM AS REQUIRED UNDER THE CODE OF THE CITY OF ROCHESTER AND THE 2009 STATE BUILDING CODES, AS APPLICABLE.

20.) FIRE DEPARTMENT CONNECTIONS SHALL BE LOCATED ON THE STREET SIDE OF THE BUILDING PER NFPA 13, AS APPLICABLE.

21.) A SECURITY SYSTEM MAY NEED TO BE INSTALLED AS MAY REQUIRED BY THE CODE OF THE CITY OF ROCHESTER, AS APPLICABLE.

22.) FINAL UTILITY LOCATIONS TO BE COORDINATED BETWEEN THE CONTRACTOR, ALL APPROPRIATE UTILITY COMPANIES AND THE ROCHESTER DPW.

23.) CONTRACTOR TO CONTACT ROCHESTER DPW A MINIMUM OF TWO WEEKS PRIOR TO ANY CONSTRUCTION TO COORDINATE ALL WORK CONCERNING INSTALLATION OF ANY PROPOSED WATER LINE IMPROVEMENTS AS MAY BE REQUIRED.

24.) ALL WATER MAIN AND SERVICE INSTALLATIONS SHALL CONFORM TO CITY OF ROCHESTER STANDARDS.

25.) CONTRACTOR SHALL COORDINATE ALL ELECTRICAL INSTALLATIONS WITH PSNH AT (603) 436-7708. ALL ELECTRIC CONDUIT INSTALLATION SHALL BE INSPECTED BY PSNH PRIOR TO BACKFILL. A 48-HOUR MINIMUM NOTICE IS REQUIRED.

26.) CONTRACTOR SHALL COORDINATE ALL TELECOMMUNICATIONS INSTALLATIONS WITH FAIRPOINT COMMUNICATIONS AT (603) 427-5525.

27.) CONTRACTOR SHALL COORDINATE ALL CABLE INSTALLATIONS WITH METROCAST.

28.) ALL NEW ON-SITE UTILITIES SHALL BE INSTALLED UNDERGROUND.

29.) THE SUBJECT PARCEL IS SERVED BY MUNICIPAL WATER AND SEWER.

30.) TESTABLE BACKFLOW PREVENTORS SHALL BE PROVIDED FOR DOMESTIC WATER LINES.

31.) ALL MATERIALS AND CONSTRUCTION SHALL CONFORM TO APPLICABLE CITY AND STATE CODES.

32.) ALL CONSTRUCTION SHALL CONFORM TO THE STATE OF NEW HAMPSHIRE DEPARTMENT OF TRANSPORTATION STANDARD SPECIFICATIONS FOR ROAD AND BRIDGE CONSTRUCTION.

33.) PROTECTION OF SUBGRADE: THE CONTRACTOR SHALL BE REQUIRED TO MAINTAIN STABLE, DEWATERED SUBGRADES, TRENCHES, AND OTHER AREAS DURING CONSTRUCTION. SUBGRADE DISTURBANCE MAY BE INFLUENCED BY EXCAVATION METHODS, MOISTURE, PRECIPITATION, GROUNDWATER CONTROL, AND CONSTRUCTION ACTIVITIES. THE CONTRACTOR SHALL TAKE PRECAUTIONS TO PREVENT SUBGRADE DISTURBANCE. SUCH PRECAUTIONS MAY INCLUDE DIVERTING STORMWATER RUNOFF AWAY FROM CONSTRUCTION AREAS, REDUCING TRAFFIC IN SENSITIVE AREAS, AND MAINTAINING AN EFFECTIVE DEWATERING PROGRAM. SOILS EXHIBITING HEAVING OR INSTABILITY SHALL BE OVER EXCAVATED TO MORE COMPETENT BEARING SOIL AND REPLACED WITH FREE DRAINING STRUCTURAL FILL MEETING THE ENGINEERS SPECIFIC RECOMMENDED CRITERIA.

34.) IF THE EARTHWORK IS PERFORMED DURING FREEZING WEATHER (NOT ALLOWED IN CITY R.O.W.), EXPOSED SUBGRADES ARE SUSCEPTIBLE TO FROST. NO FILL OR UTILITIES SHALL BE PLACED ON FROZEN GROUND. THIS WILL LIKELY REQUIRE REMOVAL OF A FROZEN SOIL CRUST AT THE COMMENCEMENT OF EACH DAY'S OPERATION. THE FINAL SUBGRADE ELEVATION WOULD ALSO REQUIRE AN APPROPRIATE DEGREE OF INSULATION AGAINST FREEZING.

35.) PLACEMENT OF BORROW MATERIALS SHALL BE PERFORMED IN A MANNER THAT PREVENTS LONG TERM DIFFERENTIAL SETTLEMENT. EXCESSIVELY WET MATERIALS SHALL BE STOCKPILED AND ALLOWED TO DRAIN BEFORE PLACEMENT. FROZEN MATERIAL SHALL NOT BE USED FOR CONSTRUCTION. VOIDS BETWEEN STONES AND CLUMPS OF MATERIAL SHALL BE FILLED WITH FINE MATERIALS.

36.) SEE DETAILS CONCERNING SITE LAYOUT, DRAINAGE, UTILITY AND SEDIMENT AND EROSION CONTROLS.

37.) ALL CATCH BASINS SHALL BE PRE-CAST H-20 LOADING AND SHALL BE EQUIPPED WITH DEEP SUMPS (4' MIN.) AND HOODS UNLESS OTHERWISE NOTED (SEE DETAILS.) HOODS ARE TO BE "THE ELIMINATOR" BY KLEANSTREAM. RIMS ARE TO BE NHDOT "B" STYLE AND SHALL BE SET FLUSH WITH FINISH GRADE, UNLESS OTHERWISE INSTRUCTED DURING CONSTRUCTION BY ROCHESTER DPW. RIMS ABOVE FINISH GRADE WILL NOT BE ACCEPTED. ALL RIMS, GRATES AND COVERS ARE TO BE U.S.A MADE.

38.) ALL EROSION CONTROL NOTES SHALL INCLUDE PROVISIONS FOR CONSTRUCTION SEQUENCING, TEMPORARY EROSION CONTROL MEASURES, AND PERMANENT STANDARDS SUCH AS LOAM SPREAD RATE FOR DISTURBED AREAS, RATES OF LIME, TYPE AND RATES FOR FERTILIZER, AND SEED AND MULCH MIXTURE WITH RATES OF APPLICATION. FILTREXX SOXX IS PREFERRED OVER THE USE OF SILT FENCE. FENCING IS TO BE USED ON SITE ONLY AS REQ. AND DIRECTED BY THE SWPPP INSPECTOR.

39.) SEE SHEET 8 FOR INLET PROTECTION DETAILS

40.) ALL DRAINAGE PIPE IS TO BE HDPE H-12. INDIVIDUAL PIPE SIZES ARE SPECIFIED. RECYCLED PIPE IS APPROVED FOR PROJECT SITE. RECYCLED HDPE PIPE "GREEN PIPE" IS ACCEPTABLE FOR THIS PROJECT SITE.

41.) ALL ELEVATIONS TO BE VERIFIED BY THE CONTRACTOR PRIOR TO CONSTRUCTION. THE DESIGN ENGINEER IS TO BE NOTIFIED IMMEDIATLY OF ANY DISCREPANCY. TEMPORARY BENCHMARKS (T.B.M.) ARE TO BE PROVIDED BY THE DESIGN ENGINEER.

42.) NOTE THAT THE PROJECT IS SUBJECT TO THE EPA NPDES PHASE II. THE NOTICE OF INTENT (NOI) MUST BE FILED ALONG WITH A STORMWATER POLLUTION PREVENTION PLAN (SWPPP). WEEKLY INSPECTIONS WILL BE CONDUCTED BY THE DESIGN ENGINEER.

43.) UPON FINAL COMPLETION AND 85% STABILIZATION THE DRAINAGE SYSTEM IS TO BE CLEANED OF ALL DEBRIS TO INCLUDE THE PUMPING OF THE BASIN SUMPS.

44.) ALL UNPAVED AREAS ARE TO RECEIVE 4" QUALITY LOAM AND SEED

45.) ALL BASINS AND DRAINS ARE TO HAVE BOOTS INSTALLED ON ALL INLETS AND OUTLETS

46.) THE LIMITS OF CONSTRUCTION DISTURBANCE SHALL BE STAKED, FLAGGED AND CLEARLY IDENTIFIED PRIOR TO THE COMMENCEMENT OF SITE WORK, AS APPLICABLE.

47.) ALL TREATMENT SWALE TO BE CONSTRUCTED SHALL HAVE SOD BOTTOMS.

48.) A LETTER OF CREDIT FOR THE COST OF RE-VEGETATING ALL DISTURBED AREAS ON THE SITE SHALL BE SUBMITTED PRIOR TO ANY EARTH DISTURBING ACTIVITY OCCURS, AS MAY BE APPLICABLE.

49.) A PRE-CONSTRUCTION CONFERENCE WITH THE DEVELOPER, THE DESIGN ENGINEER, THE EARTHWORK CONTRACTOR AND THE CITY ENGINEER SHALL OCCUR PRIOR TO ANY EARTH DISTURBING ACTIVITY.

50.) BUILDING ADDRESSES SHALL NOT CHANGE.

51.) THE FOLLOWING FEDERAL AND STATE PERMITS HAVE BEEN ISSUED FOR THE SUBJECT PROPERTY:
EPA NOTICE OF INTENT (NOI)
NHDOT (PENDING)

52.) LIST ANY VARIANCES OR SPECIAL EXCEPTIONS GRANTED BY THE ZONING BOARD OF ADJUSTMENT FOR THE PROPOSED STRUCTURE: NONE

53.) THIS PLAN PROPOSES 73,873 SQ. FT. OF DISTURBANCE.

54.) CALL DIG SAFE PRIOR TO BEGINNING WORK (1-888-344-7233)

55.) WRITTEN DIMENSION ON THIS PLAN TAKE PRECEDENCE OVER SCALED DIMENSIONS. THE CONTRACTOR SHALL USE CAUTION WHEN SCALING REPRODUCED PLANS. IN THE EVENT OF A CONFLICT BETWEEN THIS PLAN SET AND ANY OTHER DRAWINGS AND/OR SPECIFICATIONS. THE ENGINEER SHALL BE NOTIFIED BY THE CONTRACTOR PRIOR TO CONSTRUCTION. CONTRACTOR IS TO CONFIRM ALL ELEVATIONS. CONFLICTS WILL BE REPORTED TO THE DESIGN ENGINEER PRIOR TO CONSTRUCTION.

56.) VEHICLES SHALL BE WASHED OUTSIDE OF THE FACILITY, USING BIODEGRADABLE WASHING DETERGENT.

57.) THERE SHALL BE NO OUTSIDE STORAGE OF TIRES, SPARE PARTS, MATERIALS, ETC.

58.) VEHICLES ARE ONLY TO BE STORED OR PARKED ON THE PAVEMENT, AND NOT WITHIN THE RIGHT OF WAY.

59.) SNOW IS TO BE MOVED OFF-SITE ONCE SNOW STORAGE AREAS ARE FULL.

60.) EIGHTEEN (18) PARKING SPACES ARE TO REMAIN OPEN FOR CUSTOMER/EMPLOYEE PARKING.

61.) PERFORMANCE GUARANTEE: THE APPLICANT, PRIOR TO ISSUANCE OF A BUILDING PERMIT OR BEGINNING SITE WORK, SHALL PROVIDE SITE IMPROVEMENT AND RESTORATION SECURITY. THE PERFORMANCE GUARANTEE SHALL BE AN AMOUNT EQUAL TO 10% OF THE APPROVED CONSTRUCTION COST ESTIMATE (INCLUDING A 10% CONTINGENCY) TO ENSURE THE PROPER AND TIMELY COMPLETION OF THE SITE WORK AND SITE RESTORATION WITHIN THE DEVELOPMENT.
BEFORE THE SITE PLAN CAN BE RECORDED, LOTS DEEDED TO THIRD PARTIES, OR STRUCTURE OCCUPIED, THE APPLICANT SHALL PROVIDE A COST ESTIMATE OF REMAINING SITE WORK, INCLUDING LABOR, AND PROVIDE THE CITY WITH A SECURITY EQUAL TO 110% OF THE ESTIMATED COST FOR REMAINING SITE WORK. (ANY EXISTING SURETY BEING HELD AT THIS TIME MAY BE CONSIDERED TOWARD THIS AMOUNT.) THIS AMOUNT SHALL INCLUDE PREPARATION OF AS-BUILT PLANS.
CONSTRUCTION COST ESTIMATE FOR THIS PROJECT SHALL BE SUBMITTED FOR REVIEW AND APPROVAL. ESTIMATE SHALL BE BASED ON DEPARTMENT OF PUBLIC WORKS CONSTRUCTION SURETY SCHEDULE AND SHALL INCLUDE A 10% CONTINGENCY. COSTS FOR ITEMS NOT SPECIFICALLY ADDRESSED IN THE SURETY SCHEDULE WILL BE BASED ON 1) CITY STANDARDS; 2) NHDOT WEIGHTED AVERAGES, 3) INDUSTRY STANDARDS, OR 4) CONTRACTOR ESTIMATES.

ROCHESTER PLANNING # 216-29-GRD-2015

REVISION	DATE	DESCRIPTION
#5A	1-13-16	PER NHDOT DRIVEWAY PERMIT & REVIEW
#4	5-23-15	PER TRC REVIEW & ISSUE NHDOT
#3	4-29-15	PER N.O.D. AND CONDITIONS OF APPROVAL
#2	4-08-15	PER ROCHESTER TRC REVIEW
#1		POST-APPLICATION TECHNICAL REVISIONS

GENERAL NOTES
FOR
21 FARMINGTON ROAD, LLC
21 FARMINGTON ROAD, ROUTE 11
ROCHESTER, N.H.
TAX MAP 216, LOT 29

BERRY SURVEYING & ENGINEERING
335 SECOND CROWN POINT ROAD
BARRINGTON, NH 03825 (332-2863)

SCALE : NONE
DATE : MARCH 30, 2015
FILE NO. : DB 2014-149

STATE OF NEW HAMPSHIRE
KENNETH A. BERRY
No. 14243
LICENSED
PROFESSIONAL ENGINEER

SHEET 2 OF 20

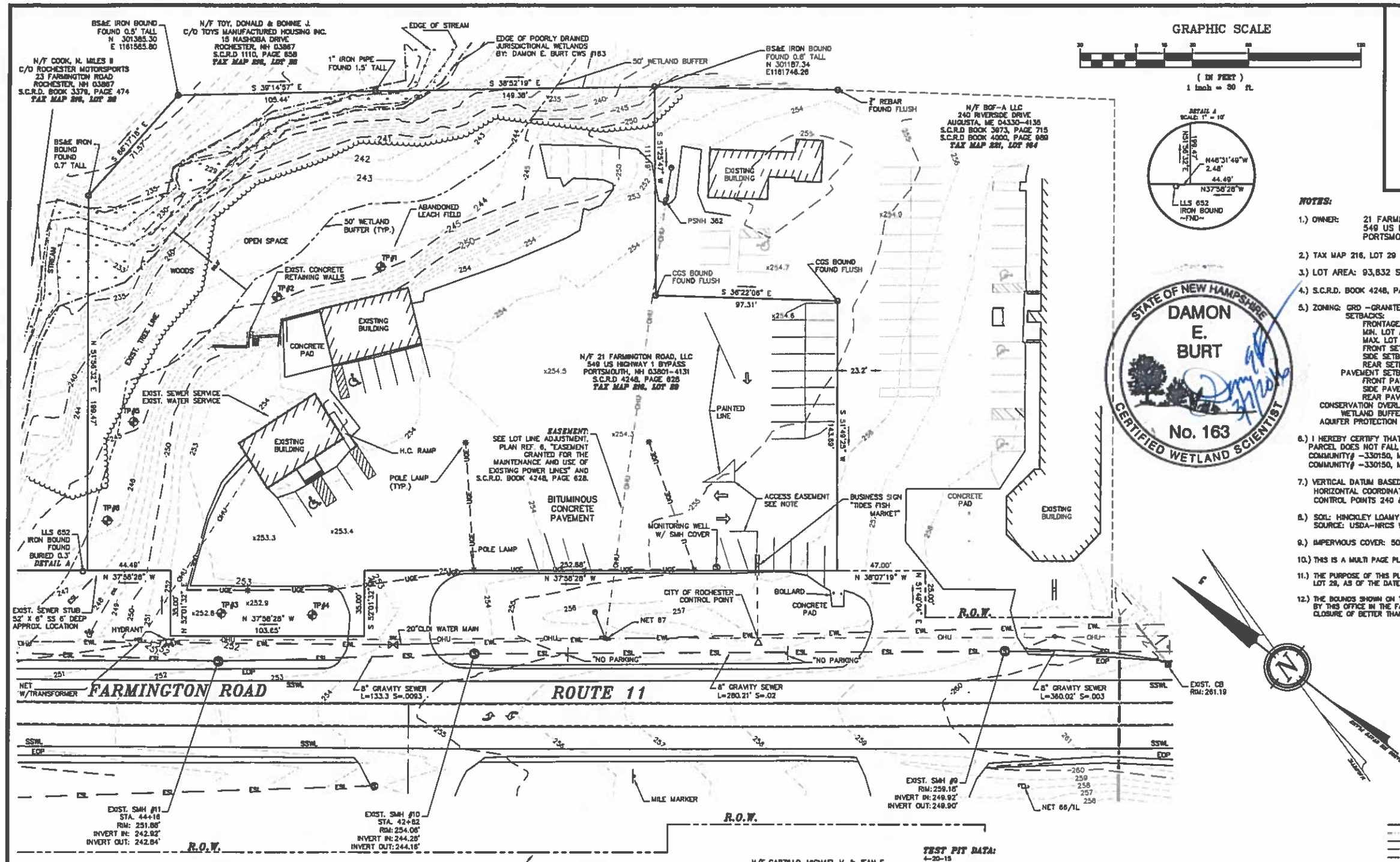

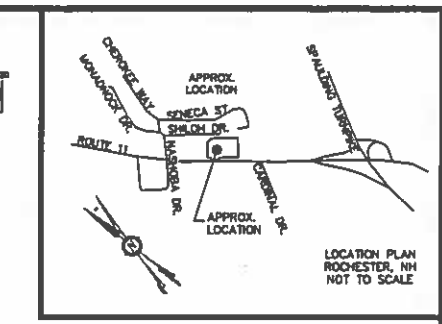

NOTES:

1.) OWNER: 21 FARMINGTON ROAD LLC
549 US HIGHWAY 1 BYP
PORTSMOUTH, NH 03801-4131

2.) TAX MAP 216, LOT 29

3.) LOT AREA: 93,832 Sq. Ft., 2.15 Ac.

4.) S.C.R.D. BOOK 4248, PAGE 628

5.) ZONING: GRD -GRANITE RIDGE DEVELOPMENT
SETBACKS:
FRONTAGE: 50 FEET, MINIMUM
MIN. LOT AREA: NO REGULATION
MAX. LOT COVERAGE: NO REGULATION
FRONT SETBACK: NO REGULATION
SIDE SETBACK: NO REGULATION
REAR SETBACK: NO REGULATION
PAVEMENT SETBACKS:
FRONT PAVEMENT: 10 FEET
SIDE PAVEMENT: 5 FEET
REAR PAVEMENT: 10 FEET
CONSERVATION OVERLAY DISTRICT
WETLAND BUFFER: 50 FEET
AQUIFER PROTECTION OVERLAY DISTRICT

6.) I HEREBY CERTIFY THAT, TO THE BEST OF MY KNOWLEDGE & BELIEF, THIS PARCEL DOES NOT FALL WITHIN THE FLOOD PLAIN FLOOD HAZARD REF.: FEMA COMMUNITY# -330150, MAP# - 33017C0184D, DATED: MAY 17, 2005 & FEMA COMMUNITY# -330150, MAP# - 33017C0203D, DATED: MAY 17, 2005

7.) VERTICAL DATUM BASED ON USGS NAVD88 ELEVATIONS.
HORIZONTAL COORDINATES BASED ON NH GRID. (CITY OF ROCHESTER NH - CONTROL POINTS 240 & 241)

8.) SOIL: HINCKLEY LOAMY SAND, 3-8% SLOPE THROUGHOUT
SOURCE: USDA-NRCS WEBSOIL

9.) IMPERVIOUS COVER: 50,006 Sq. Ft., 1.15 Ac., 53.3%

10.) THIS IS A MULTI PAGE PLAN SET WITH ADDITIONAL ENGINEERING INFORMATION PROVIDED.

11.) THE PURPOSE OF THIS PLAN IS TO SHOW THE EXISTING CONDITIONS ON TAX MAP 216, LOT 29, AS OF THE DATE ON THIS PLAN.

12.) THE BOUNDS SHOWN ON THIS PLAN ARE A RESULT OF A CLOSED TRAVERSE PERFORMED BY THIS OFFICE IN THE FALL OF 2014 UNDER NO SNOW CONDITIONS, WITH AN ERROR OF CLOSURE OF BETTER THAN 1 PART IN 10,000.

LEGEND:

IRON BOUND ~TBS~
IRON BOUND ~FND~
GRANITE BOUND ~FND~
STONE BOUND ~FND~
UTILITY POLE
GUY WIRE
CURB STOP
GATE VALVE
GAS VALVE
FIRE HYDRANT
CATCH BASIN
SEWER MAN HOLE
SINGLE POST SIGN
POLE LIGHT
TESTPIT
TREE
BUILDING SETACK LINE
EASEMENT LINE
GAS LINE
WATER LINE
SEWER LINE
OVERHEAD UTILITYS
HIGHWAY FENCE
SOILS LINE
MAJOR CONTOUR LINE
MINOR CONTOUR LINE
50' WETLAND BUFFER
R.O.W. LINE
ABUTTING LOT LINES
x252.9 SPOT ELEVATION

I CERTIFY THAT THIS SURVEY PLAT IS NOT A SUBDIVISION PURSUANT TO THIS TITLE AND THAT THE LINES OF STREETS AND WAYS SHOWN ARE THOSE OF PUBLIC OR PRIVATE STREETS OR WAYS ALREADY ESTABLISHED AND THAT NO NEW WAYS ARE SHOWN.

1/18/16
KENNETH A. BERRY L.L.S. 805 DATE

I CERTIFY THAT THIS PLAT EXCEEDS THE MINIMUM REQUIREMENT FOR ACCURACY AND COMPLETENESS OF THE STATE OF N.H. AND OF THE CITY OF ROCHESTER, N.H. - 1:10,000-

1/18/16
KENNETH A. BERRY L.L.S. 805 DATE

PLAN REFERENCES:

1.) "PROPOSED SITE REVIEW FOR MARC MOTORS, ROUTE 11, ROCHESTER NH"
BY: BERRY SURVEYING & ENGINEERING
DATED: NOVEMBER 9, 1995
FILE #1995-63

2.) "PROPOSED RETAIL OUTLET RENE & WAYNE CARDINAL, ROUTE 11, ROCHESTER, NH"
BY: BERRY SURVEYING & ENGINEERING
DATED: APRIL 2, 1986
FILE # 1986-52

3.) "LEON J. CARDINAL LOT, ROCHESTER, NH"
BY: NEW ENGLAND FORESTRY FOUNDATION
D.R. POPPEMA SURVEYOR
DATED: NOVEMBER 1972
ROCHESTER PLAN # 38 POCKET 8 FOLDER 3

4.) "PLAN OF LAND OF RICHARD L. COUSINEAU ROUTE 11, ROCHESTER NH"
BY: BERRY CONST. CO.
DATED: FEBRUARY 5, 1975
FILE # 1975-10E

5.) "PROPOSED 2 BEDROOM RESIDENCE CARDINALS SEAFARER RESTAURANT, ROUTE 11, ROCHESTER NH"
BY: BERRY SURVEYING & ENGINEERING
DATED: APRIL, 1986, FILE # 1986-74

6.) "PROPOSED LOT LINE REVISION RENE CARDINAL & WAYNE CARDINAL, ROUTE 11, ROCHESTER NH"
BY: BERRY SURVEYING & ENGINEERING
DATED: DECEMBER 8, 1986, S.C.R.D. PLAN # 30A-85

7.) PROPOSED BOUNDARY LINE ADJUSTMENT FOR CARDINALS SEAFARER RESTAURANT INC. AND BGF-A LLC, ROCHESETER, NH
TAX MAP 216, LOT 29 & TAX MAP 221, LOT 164
BY: BERRY SURVEYING & ENGINEERING
DATED: DECEMBER 11, 2011
FILE #DB 2011-154, S.C.R.D. PLAN # 103-048

8.) NHDOT PLANS F 022-1(1), SHEET 19, 1956
NH ROUTE 11 - HENRY WILSON HIGHWAY
ON FILE AT NHDOT, HAZEN DRIVE, CONCORD, NH

EASEMENTS:

SEE LOT LINE ADJUSTMENT, PLAN REF. 6, "INCLUDES CROSS EASEMENTS FOR THE TWO SUBJECT LOTS FOR PARKING, ACCESS INTO THE SITE AND CIRCULATION THROUGH THE SITE. TO BE USED IN A REASONABLE AND IN THE CUSTOMARY FASHION OF SUCH EASEMENTS. IN THE EVENT THAT EITHER LOT IS REDEVELOPED SUCH THAT A CHANGE OR TERMINATION OF ONE OR MORE OF THE EASEMENTS IS IN ORDER, THE APPLICANT FOR SUCH REDEVELOPMENT MAY PROPOSE A CHANGE OR TERMINATION AS PART OF THE SITE PLAN APPLICATION, SUBJECT TO REASONABLE APPROVAL BY THE PLANNING BOARD." SEE ALSO S.C.R.D. BOOK 4248 PAGE 628 FOR INGRESS AND EGRESS ONLY BUT NOT FOR PARKING VEHICLES WITH REFERENCE TO S.C.R.D BOOK 3873, PAGE 707.

UTILITY NOTE :

THE UNDERGROUND UTILITIES SHOWN ON THIS PLAN HAVE BEEN LOCATED FROM FIELD SURVEY INFORMATION AND EXISTING DRAWINGS. THE SURVEYOR NOR THE ENGINEER MAKES NO GUARANTEES THAT THE UNDERGROUND UTILITIES SHOWN COMPRISE ALL SUCH UTILITIES IN THE AREA, EITHER IN SERVICE OR ABANDONED. THE SURVEYOR FURTHER DOES NOT WARRANT THAT THE UNDERGROUND UTILITIES SHOWN ARE IN THE EXACT LOCATION INDICATED ALTHOUGH HE DOES CERTIFY THAT THEY ARE LOCATED AS ACCURATELY AS POSSIBLE FROM THE INFORMATION AVAILABLE.

THE WETLAND DELINEATION WAS COMPLETED FALL 2014 IN ACCORDANCE WITH THE 1987 CORP OF ENGINEERS WETLAND DELINEATION MANUAL. JURISDICTIONAL WETLANDS WERE IDENTIFIED AND DELINEATED USING THE ROUTINE DETERMINATIONS METHOD AS OUTLINED IN THE MANUAL.
THE DELINEATION WAS DONE BY:
DAMON E. BURT, CWS #163
FRAGGLE ROCK ENVIRONMENTAL SERVICES

TEST PIT DATA:
4-20-15

1.) 0"-3" 10YR 3/3, FINE SANDY LOAM, GRANULAR, FRIABLE, TOPSOIL
3"-10" 10YR 5/4, SAND, GRANULAR, FRIABLE
10"-24" SYR 7/2, SEPTIC STONE, GRANULAR, FRIABLE, ABANDONED LEACH FIELD
24"-72" 10YR 4/4, FINE SAND AND GRAVEL, GRANULAR, FRIABLE, COBBLES TO 9"
E.S.H.W.T. N/A
ROOTS TO 4"
TERMINATED @ 72"
NO GROUNDWATER

2.) 0"-16" 10YR 5/4, SAND AND GRAVEL, GRANULAR, FRIABLE, COBBLES TO 8"
16"-72" 10YR 6/4, SAND, GRANULAR, FRIABLE
E.S.H.W.T. N/A, TERMINATED @ 72"
NO GROUNDWATER

3.) 0"-12" 10YR 3/3, FINE SANDY LOAM, GRANULAR, FRIABLE, TOPSOIL
12"-36" 10YR 4/4, SAND AND GRAVEL, GRANULAR, FRIABLE, COBBLES TO 12"
36"-72" 10YR 6/4, SAND AND GRAVEL, GRANULAR, FRIABLE, COBBLES TO 12"
E.S.H.W.T. N/A, ROOTS TO 12"
TERMINATED @ 72", NO GROUNDWATER

4.) 0-12" 10YR 3/3, FINE SANDY LOAM, GRANULAR, FRIABLE, TOPSOIL
12"-72" 7.5YR 5/6, SAND AND GRAVEL, GRANULAR, FRIABLE, TOPSOIL
E.S.H.W.T. N/A, ROOTS TO 12"
TERMINATED @ 72", NO GROUNDWATER

10-20-15

5.) 0"-12" 10YR 5/4, SAND AND GRAVEL, GRANULAR, FRIABLE, COBBLES TO 9"
12"-72" 10YR 6/4, SAND, GRANULAR, FRIABLE
E.S.H.W.T. N/A, TERMINATED @ 72"
NO GROUNDWATER

6.) 0"-18" 10YR 5/4, SAND AND GRAVEL, GRANULAR, FRIABLE, COBBLES TO 8"
18"-72" 10YR 6/4, SAND, GRANULAR, FRIABLE
E.S.H.W.T. N/A, TERMINATED @ 72"
NO GROUNDWATER

ROCHESTER PLANNING # 216-29-GRD-2015

REVISION	DATE	DESCRIPTION
#5	11-05-15	PER NHDOT DRIVEWAY PERMIT APPLICATION
#4	8-04-15	REDESIGN FOR 30' ACCESS EASEMENT
#3	5-22-15	PER N.O.D. AND CONDITIONS OF APPROVAL
#2	5-05-15	PER PRELIMINARY TRC REVIEW
#1	4-09-15	POST-APPLICATION TECHNICAL REVISIONS

EXISTING CONDITIONS PLAN
LAND OF
21 FARMINGTON ROAD LLC
21 FARMINGTON ROAD, ROUTE 11
ROCHESTER, NH 03867
TAX MAP 216, LOT 29

BERRY SURVEYING & ENGINEERING
335 SECOND CROWN POINT ROAD
BARRINGTON, NH 03825 (332-2863)

SCALE : 1 IN. EQUALS 30 FT.
DATE : MARCH 30, 2015
FILE NO. : DB 2014 -149

STATE OF NEW HAMPSHIRE No. 805 KENNETH A. BERRY LICENSED LAND SURVEYOR

SHEET 3 OF 20

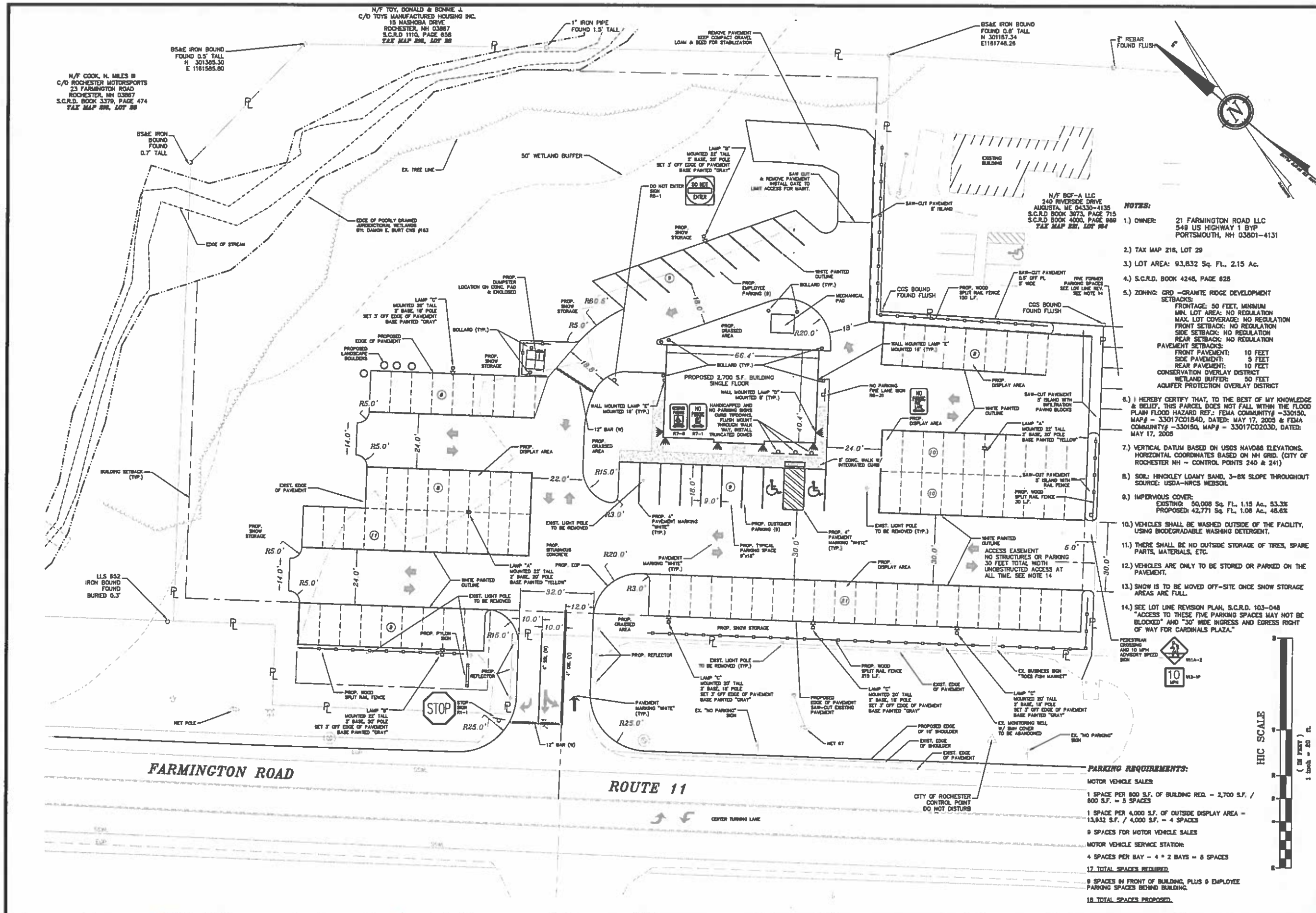

NOTES:

1.) OWNER: 21 FARMINGTON ROAD LLC
549 US HIGHWAY 1 BYP
PORTSMOUTH, NH 03801-4131

2.) TAX MAP 216, LOT 29

3.) LOT AREA: 93,632 Sq. Ft., 2.15 Ac.

4.) S.C.R.D. BOOK 4248, PAGE 628

5.) ZONING: GRD –GRANITE RIDGE DEVELOPMENT
SETBACKS:
FRONTAGE: 50 FEET, MINIMUM
MIN. LOT AREA: NO REGULATION
MAX. LOT COVERAGE: NO REGULATION
FRONT SETBACK: NO REGULATION
SIDE SETBACK: NO REGULATION
REAR SETBACK: NO REGULATION
PAVEMENT SETBACKS:
FRONT PAVEMENT: 10 FEET
SIDE PAVEMENT: 5 FEET
REAR PAVEMENT: 10 FEET
CONSERVATION OVERLAY DISTRICT
WETLAND BUFFER: 50 FEET
AQUIFER PROTECTION OVERLAY DISTRICT

6.) I HEREBY CERTIFY THAT, TO THE BEST OF MY KNOWLEDGE & BELIEF, THIS PARCEL DOES NOT FALL WITHIN THE FLOOD PLAIN FLOOD HAZARD REF.: FEMA COMMUNITY# –330150, MAP# – 33017C0181D, DATED: MAY 17, 2005 & FEMA COMMUNITY# –330150, MAP# – 33017C0203D, DATED: MAY 17, 2005

7.) VERTICAL DATUM BASED ON USGS NAVD88 ELEVATIONS. HORIZONTAL COORDINATES BASED ON NH GRID. (CITY OF ROCHESTER NH – CONTROL POINTS 240 & 241)

8.) SOIL: HINCKLEY LOAMY SAND, 3–8% SLOPE THROUGHOUT SOURCE: USDA–NRCS WEBSOIL

9.) IMPERVIOUS COVER:
EXISTING: 50,008 Sq. Ft., 1.15 Ac., 53.3%
PROPOSED: 42,771 Sq. Ft., 1.08 Ac., 45.6%

10.) VEHICLES SHALL BE WASHED OUTSIDE OF THE FACILITY, USING BIODEGRADABLE WASHING DETERGENT.

11.) THERE SHALL BE NO OUTSIDE STORAGE OF TIRES, SPARE PARTS, MATERIALS, ETC.

12.) VEHICLES ARE ONLY TO BE STORED OR PARKED ON THE PAVEMENT.

13.) SNOW IS TO BE MOVED OFF–SITE ONCE SNOW STORAGE AREAS ARE FULL.

14.) SEE LOT LINE REVISION PLAN, S.C.R.D. 103–048 "ACCESS TO THESE FIVE PARKING SPACES MAY NOT BE BLOCKED" AND "30' WIDE INGRESS AND EGRESS RIGHT OF WAY FOR CARDINALS PLAZA."

PARKING REQUIREMENTS:

MOTOR VEHICLE SALES:

1 SPACE PER 800 S.F. OF BUILDING REQ. – 2,700 S.F. / 800 S.F. = 3 SPACES

1 SPACE PER 4,000 S.F. OF OUTSIDE DISPLAY AREA = 13,932 S.F. / 4,000 S.F. = 4 SPACES

9 SPACES FOR MOTOR VEHICLE SALES

MOTOR VEHICLE SERVICE STATION:

4 SPACES PER BAY – 4 * 2 BAYS = 8 SPACES

17 TOTAL SPACES REQUIRED

9 SPACES IN FRONT OF BUILDING, PLUS 9 EMPLOYEE PARKING SPACES BEHIND BUILDING.

18 TOTAL SPACES PROPOSED.

ROCHESTER PLANNING # 216-29-GRD-2015

REVISION	DATE	DESCRIPTION
#A	1-13-16	PER NHDOT DRIVEWAY PERMIT & FINAL REVIEW
#B	2-22-16	PER NHDOT DRIVEWAY PERMIT APPLICATION
#C	3-22-16	PER N.H.D.O.T. & ROCHESTER TRC REVIEW
#D	5-23-16	PER N.O.D. AND CONDITIONS OF APPROVAL
#E	4-28-16	POST-APPLICATION TECHNICAL REVISIONS

PROPOSED SITE PLAN
LAND OF
21 FARMINGTON ROAD LLC
21 FARMINGTON ROAD, ROUTE 11
ROCHESTER, NH 03867
TAX MAP 216, LOT 29

BERRY SURVEYING & ENGINEERING
335 SECOND CROWN POINT ROAD
BARRINGTON, NH 03825 (332-2863)

SCALE : 1 IN. EQUALS 20 FT.
DATE : MARCH 30, 2015
FILE NO. : DB 2014 -149

STATE OF NEW HAMPSHIRE
KENNETH A. BERRY
No. 11243
LICENSED PROFESSIONAL ENGINEER

SHEET 4 OF 20

Certified 3/3/16 [illegible] Chief Planner

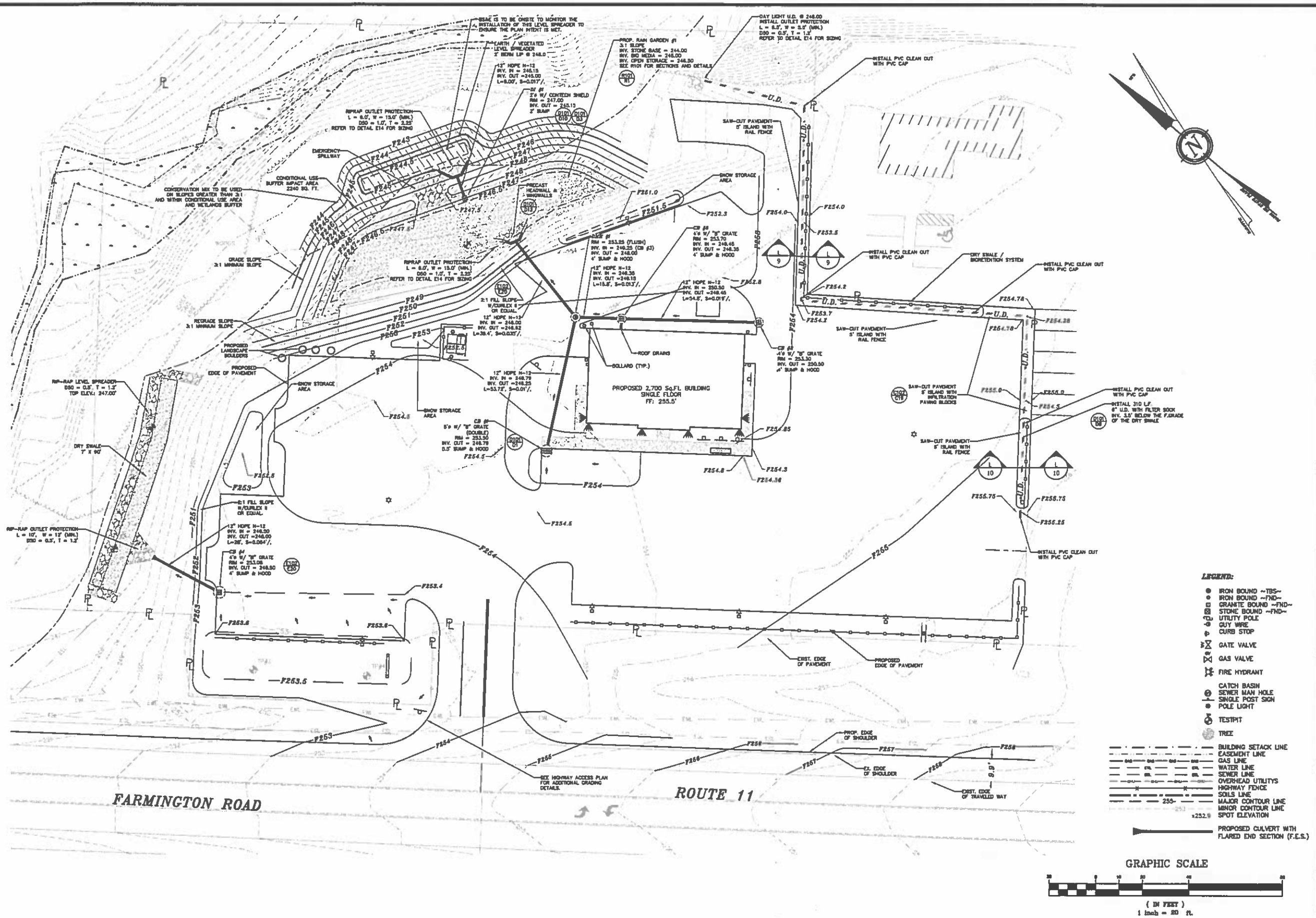

ROCHESTER PLANNING # 216-29-GRD-2015

REVISION	DATE	DESCRIPTION
6	12-17-15	PER NHDOT DRIVEWAY PERMIT REVIEW
5	11-05-15	PER NHDOT DRIVEWAY PERMIT APPLICATION
4	8-04-15	REDESIGN FOR 30' ACCESS EASEMENT
3	5-22-15	PER N.O.D. AND CONDITIONS OF APPROVAL
2	4-13-15	PER ROCHESTER TECHNICAL REVIEW
1	4-08-15	POST-APPLICATION TECHNICAL REVISIONS

PROPOSED GRADING & DRAINAGE PLAN
LAND OF
21 FARMINGTON ROAD LLC
21 FARMINGTON ROAD, ROUTE 11
ROCHESTER, NH 03867
TAX MAP 216, LOT 29

BERRY SURVEYING & ENGINEERING
335 SECOND CROWN POINT ROAD
BARRINGTON, NH 03825 (332-2863)

SCALE : 1 IN. EQUALS 20 FT.
DATE : MARCH 30, 2015
FILE NO. : DB 2014 -149

STATE OF NEW HAMPSHIRE
KENNETH A. BERRY
No. 14243
LICENSED
PROFESSIONAL ENGINEER

SHEET 5 OF 20

LEGEND:

- IRON BOUND ~TBS~
- IRON BOUND ~FND~
- GRANITE BOUND ~FND~
- STONE BOUND ~FND~
- UTILITY POLE
- GUY WIRE
- CURB STOP
- GATE VALVE
- GAS VALVE
- FIRE HYDRANT
- CATCH BASIN
- SEWER MAN HOLE
- SINGLE POST SIGN
- POLE LIGHT
- TESTPIT
- TREE
- BUILDING SETACK LINE
- EASEMENT LINE
- GAS LINE
- WATER LINE
- SEWER LINE
- OVERHEAD UTILITYS
- HIGHWAY FENCE
- SOILS LINE
- 255 MAJOR CONTOUR LINE
- MINOR CONTOUR LINE
- x252.9 SPOT ELEVATION
- PROPOSED CULVERT WITH FLARED END SECTION (F.E.S.)

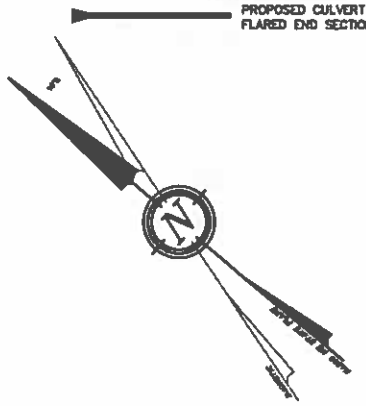

1.) EXISTING CONDITIONS INFORMATION IS BASED ON A SURVEY PERFORMED BY BERRY SURVEYING & ENGINEERING AND IS ENCLOSED IN THIS PACKAGE.

2.) THIS PROJECT SHALL BE CONSTRUCTED IN ACCORDANCE WITH NHDOT STANDARD SPECIFICATIONS DATED 2010. CURRENT STANDARD PLANS, SUPPLEMENTAL SPECIFICATIONS AND SPECIAL PROVISIONS INCLUDED IN THE PROPOSAL.

3.) CONTRACTOR SHALL TAKE SPECIAL CARE IN NOT DISTURBING EXISTING MONUMENTS BOUNDS, AND OR BENCHMARKS WITHOUT FIRST MAKING PROVISIONS FOR RELOCATION

4.) THE LOCATIONS OF EXISTING UNDERGROUND UTILITIES ARE SHOWN IN AN APPROXIMATE WAY ONLY AND HAVE NOT BEEN INDEPENDENTLY VERIFIED BY THE OWNER OR ITS REPRESENTATIVE. THE CONTRACTOR SHALL DETERMINE THE EXACT LOCATION OF ALL EXISTING UTILITIES BEFORE COMMENCING WORK AND AGREES TO BE FULLY RESPONSIBLE FOR ANY AND ALL DAMAGES WHICH MIGHT BE OCCASIONED BY THE CONTRACTOR'S FAILURE TO LOCATE EXACTLY AND TO PRESERVE ANY AND ALL UNDERGROUND UTILITIES CALL "DIG-SAFE" 1-888-DIGSAFE (344-7233) AT LEAST 72 HOURS BEFORE COMMENCING CONSTRUCTION

5.) WHERE AN EXISTING UNDERGROUND UTILITY IS FOUND TO CONFLICT WITH THE PROPOSED WORK, THE LOCATION, ELEVATION AND SIZE OF THE UTILITY SHALL BE ACCURATELY DETERMINED WITHOUT DELAY BY THE CONTRACTOR, AND THE INFORMATION FURNISHED TO THE ENGINEER FOR RESOLUTION OF THE CONFLICT.

6.) THE CONTRACTOR SHALL MAKE ALL ARRANGEMENTS FOR THE ALTERATION AND ADJUSTMENT OF GAS, ELECTRIC, TELEPHONE AND ANY OTHER PRIVATE UTILITIES BY THE UTILITY COMPANIES.

7.) AREAS OUTSIDE THE LIMITS OF PROPOSED WORK DISTURBED BY THE CONTRACTOR'S OPERATIONS SHALL BE RESTORED BY THE CONTRACTOR TO THEIR ORIGINAL CONDITION AT THE CONTRACTOR'S EXPENSE.

8.) THE TERM "PROPOSED" (PROP.) MEANS WORK TO BE CONSTRUCTED USING NEW MATERIALS, OR, WHERE APPLICABLE, RE-USING EXISTING MATERIALS IDENTIFIED AS "REMOVE & RESET" (R & R)

9.) ALL EXISTING SIGNS WITHIN THE PROJECT LIMITS SHALL BE RETAINED UNLESS NOTED OTHERWISE.

10.) ALL SYMBOLS, WORDS, TRANSVERSE MARKINGS (STOP BARS, CROSSWALK LINES, AND RAILROAD SYMBOLS), LANE LINES, AND ALL OTHER MARKINGS NOTED WITH (T) SHALL BE THERMOPLASTIC

11.) ALL DISTURBED AREAS NOT DESIGNATED TO BE PAVED SHALL HAVE LOAM PLACED AND SEEDED. THE LOAM SHALL HAVE A MINIMUM DEPTH OF 4 INCHES AND SHALL BE PLACED FLUSH WITH THE TOP OF THE ADJACENT CURB, EDGING, BERM OR PAVEMENT SURFACE.

12.) CONTACT BUREAU OF TRAFFIC TO REVIEW ALL PASSING ZONES PRIOR TO STRIPING OR INSTALLING W14-3 SIGNS IF APPLICABLE.

13) THE CONTRACTOR SHALL CONTACT SUBRAMANIAN SHARMA AT NHDOT BUREAU OF TRAFFIC AT (603) 271-2291 ONE WEEK PRIOR TO PAVEMENT MARKINGS.

PROFILE OF DRIVEWAY ENTRANCE
1" = 20' HORIZONTAL
1" = 4' VERTICAL

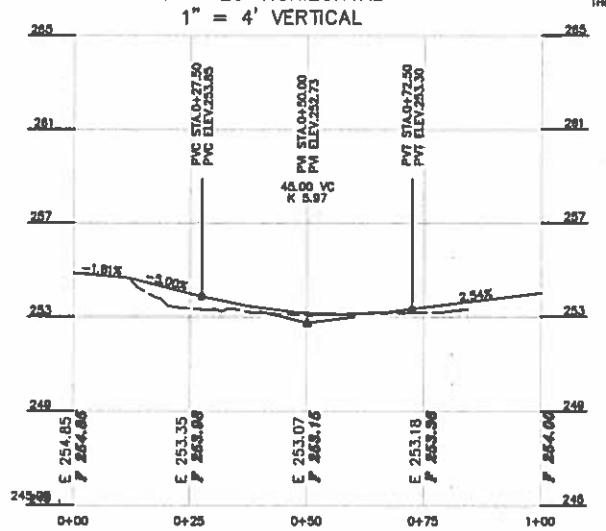

TYPICAL ROADWAY SECTION NHDOT WIDENING
NOT TO SCALE

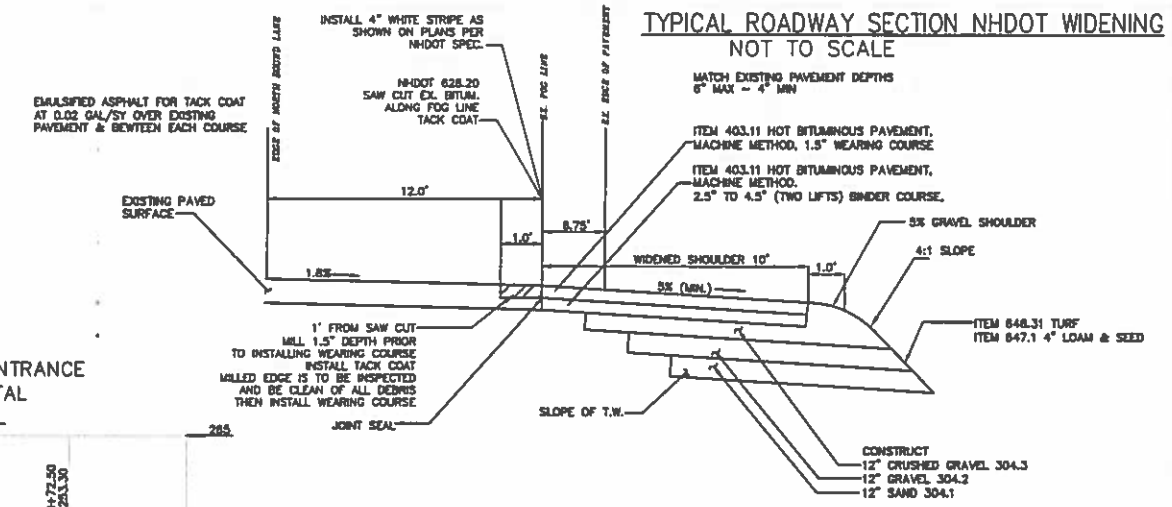

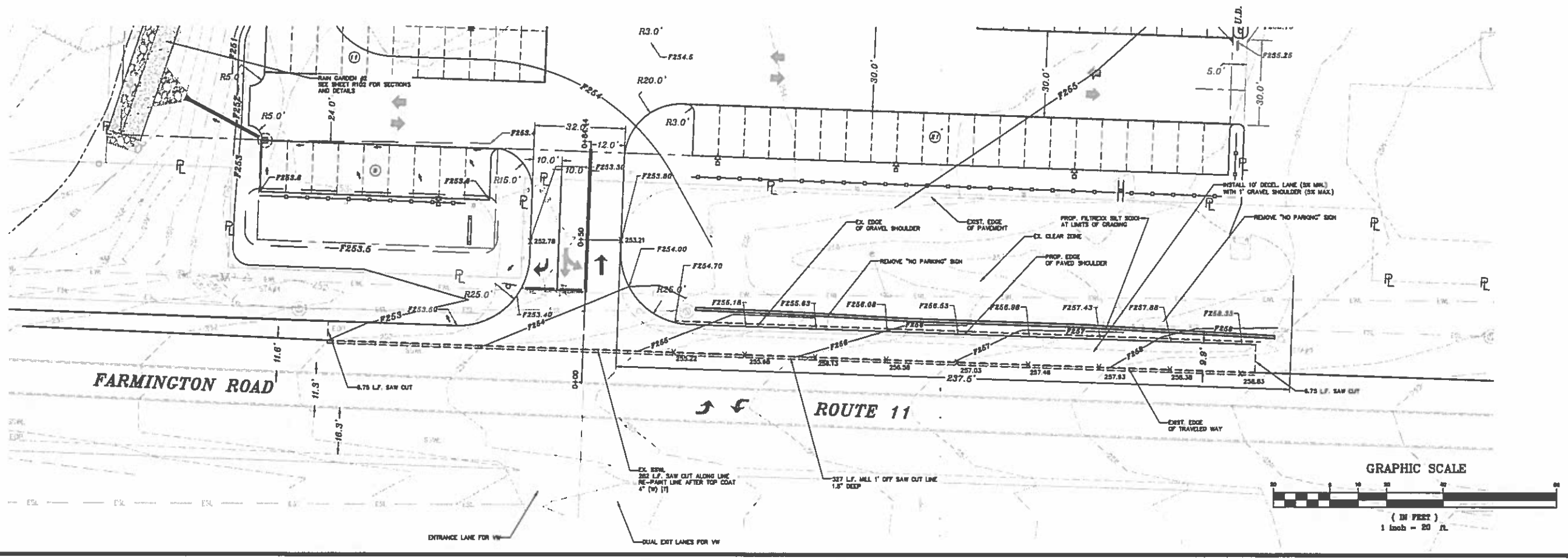

ROCHESTER PLANNING # 216-29-GRD-2015

REVISION	DATE	DESCRIPTION
#5	12-17-15	PER NHDOT DRIVEWAY PERMIT REVIEW
#6	1-5-16	PER NHDOT DRIVEWAY PERMIT APPLICATION
#4	8-04-15	REDESIGN FOR 30' ACCESS EASEMENT
#3	5-22-15	PER N.O.D. AND CONDITIONS OF APPROVAL
#2	4-28-15	PER ROCHESTER TRC REVIEW
#1	4-08-15	POST-APPLICATION TECHNICAL REVISIONS

HIGHWAY ACCESS PLAN
LAND OF
21 FARMINGTON ROAD LLC
21 FARMINGTON ROAD, ROUTE 11
ROCHESTER, NH 03867
TAX MAP 216, LOT 29

BERRY SURVEYING & ENGINEERING
335 SECOND CROWN POINT ROAD
BARRINGTON, NH 03825 (332-2863)

SCALE : 1 IN. EQUALS 20 FT.
DATE : MARCH 30, 2015
FILE NO. : DB 2014 -149

STATE OF NEW HAMPSHIRE
KENNETH A. BERRY
No. 14143
LICENSED
PROFESSIONAL ENGINEER

SHEET 6 OF 20

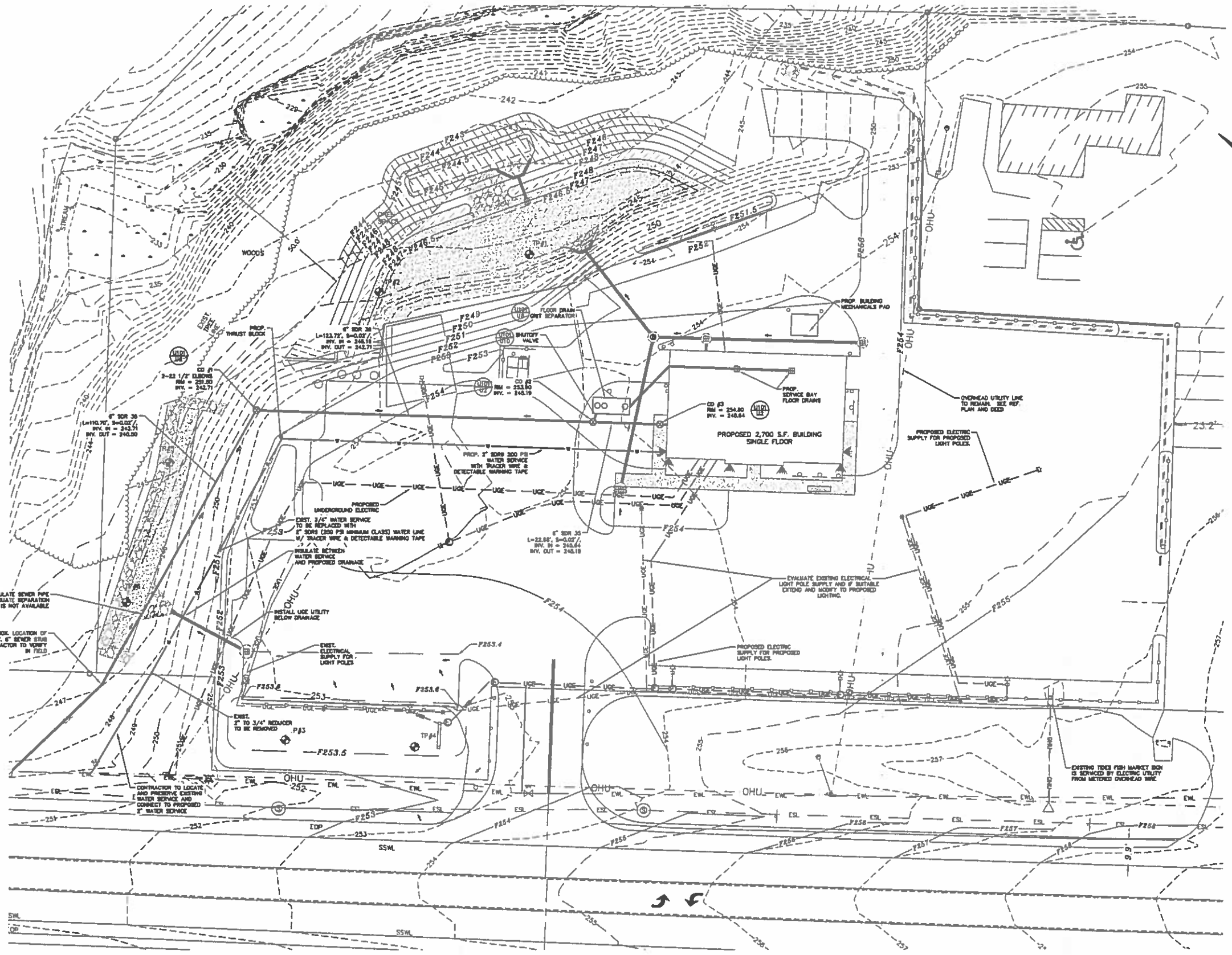

NOTE:

MUNICIPAL WATER AND SEWER SERVICES ARE CURRENTLY PROVIDED ON SITE. DURING THE DEMOLITION PROCESS, EXISTING UTILITIES ARE TO BE IDENTIFIED AND LOCATED. CONTRACTOR WILL COORDINATE WITH THE CITY OF ROCHESTER DPW / ENGINEERING AND THE DESIGN ENGINEER TO PROVIDE DESIGN-BUILD.

ALL WATER AND SEWER WORK SHALL BE CONSTRUCTED IN ACCORDANCE WITH THE CITY OF ROCHESTER STANDARDS. A PERMIT FOR WATER AND SEWER CONNECTIONS TO THE EXISTING SERVICES WILL BE REQUIRED.

WATER LINE CONNECTION TO BUILDING SHALL BE EQUIPPED WITH A BACKFLOW PREVENTER, AND INSPECTIONS ARE TO BE COORDINATED WITH THE BUILDING, ZONING, AND LICENSING SERVICES DEPARTMENT.

LEGEND:

- IRON BOUND ~TBS~
- IRON BOUND ~FND~
- GRANITE BOUND ~FND~
- STONE BOUND ~FND~
- UTILITY POLE
- GUY WIRE
- CURB STOP
- GATE VALVE
- GAS VALVE
- FIRE HYDRANT
- CATCH BASIN
- SEWER MAN HOLE
- SINGLE POST SIGN
- POLE LIGHT
- TESTPIT
- TREE
- BUILDING SETACK LINE
- EASEMENT LINE
- GAS LINE
- WATER LINE
- SEWER LINE
- OVERHEAD UTILITYS
- HIGHWAY FENCE
- SOILS LINE
- 255 MAJOR CONTOUR LINE
- 253 MINOR CONTOUR LINE
- x252.9 SPOT ELEVATION

ROCHESTER PLANNING # 216-29-GRD-2015

REVISION	DATE	DESCRIPTION
6	1-13-15	PER NHDOT DRIVEWAY PERMIT & FINAL REVIEW
5	5-04-15	REVISION FOR 30' ACCESS EASEMENT
4	5-22-15	PER N.O.D. AND CONDITIONS OF APPROVAL
3	6-22-15	PER ROCHESTER TRC REVIEW
2	4-20-15	POST-APPLICATION TECHNICAL REVISIONS

PROPOSED UTILITIES PLAN
LAND OF
21 FARMINGTON ROAD LLC
21 FARMINGTON ROAD, ROUTE 11
ROCHESTER, NH 03867
TAX MAP 216, LOT 29

BERRY SURVEYING & ENGINEERING
335 SECOND CROWN POINT ROAD
BARRINGTON, NH 03825 (332-2863)

SCALE : 1 IN. EQUALS 20 FT.
DATE : MARCH 30, 2015
FILE NO. : DB 2014 -149

STATE OF NEW HAMPSHIRE
KENNETH A. BERRY No. 14243
LICENSED PROFESSIONAL ENGINEER

SHEET 7 OF 20

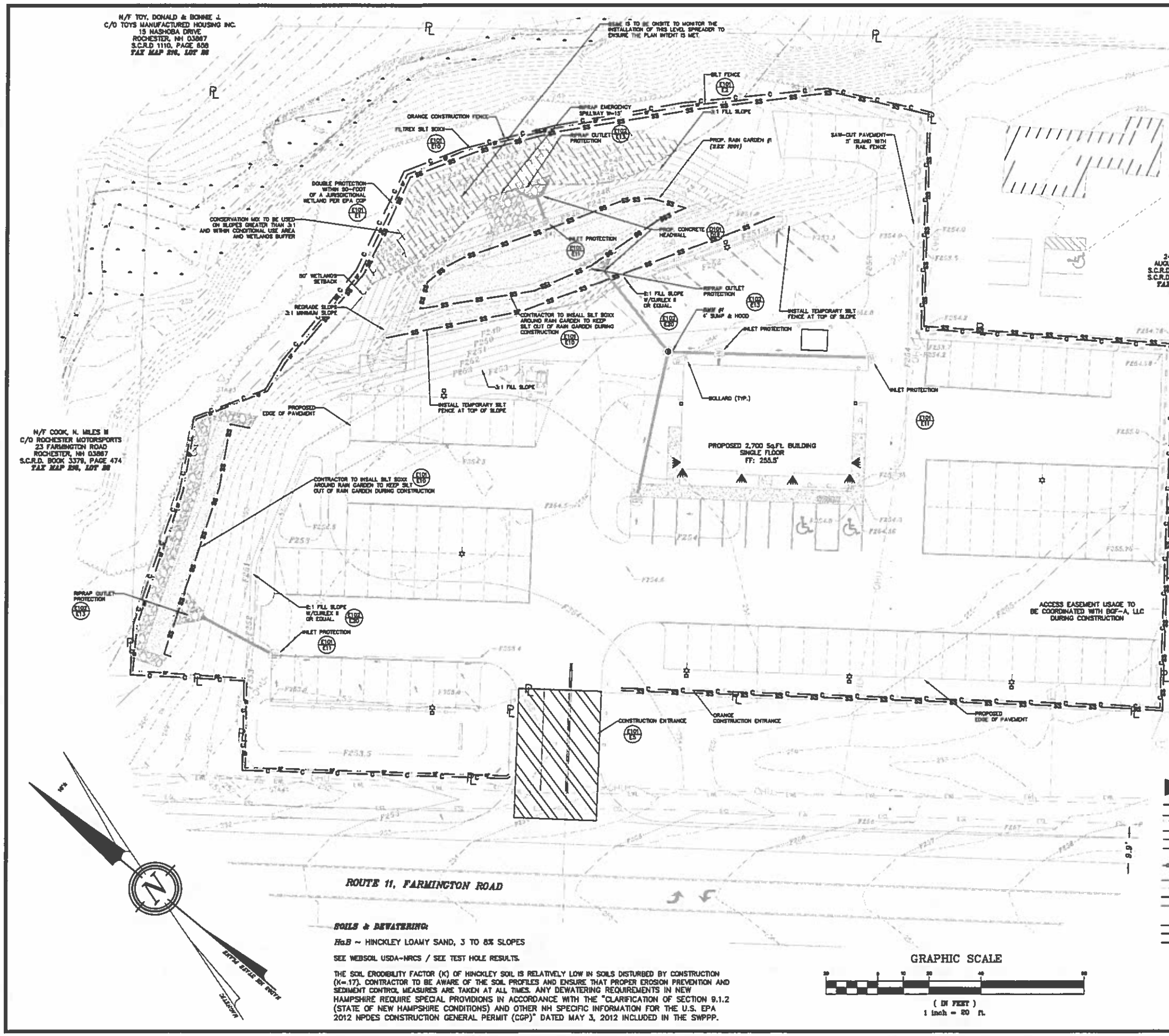

SOILS & DEWATERING:

HaB ~ HINCKLEY LOAMY SAND, 3 TO 8% SLOPES

SEE WEBSOIL USDA-NRCS / SEE TEST HOLE RESULTS.

THE SOIL ERODIBILITY FACTOR (K) OF HINCKLEY SOIL IS RELATIVELY LOW IN SOILS DISTURBED BY CONSTRUCTION (K=.17). CONTRACTOR TO BE AWARE OF THE SOIL PROFILES AND ENSURE THAT PROPER EROSION PREVENTION AND SEDIMENT CONTROL MEASURES ARE TAKEN AT ALL TIMES. ANY DEWATERING REQUIREMENTS IN NEW HAMPSHIRE REQUIRE SPECIAL PROVIDIONS IN ACCORDANCE WITH THE "CLARIFICATION OF SECTION 9.1.2 (STATE OF NEW HAMPSHIRE CONDITIONS) AND OTHER NH SPECIFIC INFORMATION FOR THE U.S. EPA 2012 NPDES CONSTRUCTION GENERAL PERMIT (CGP)" DATED MAY 3, 2012 INCLUDED IN THE SWPPP.

NOTES:

1.) OWNER: 21 FARMINGTON ROAD, LLC
DEVELOPER: 21 FARMINGTON ROAD, LLC

2.) CITY OF ROCHESTER TAX MAP 216, LOT 29

3.) THE PURPOSE OF THIS PLAN IS TO DEMONSTRATE PROPER SEDIMENT AND EROSION CONTROL DURING CONSTRUCTION.

4.) UNDERGROUND UTILITY LOCATIONS ARE BASED UPON BEST AVAILABLE EVIDENCE AND ARE NOT FIELD VERIFIED. LOCATING AND PROTECTING ANY ABOVE AND BELOW GROUND UTILITIES IS THE SOLE RESPONSIBILITY OF THE CONTRACTOR. ANY UTILITY CONFLICTS SHOULD BE REPORTED IMMEDIATELY TO THE DESIGN ENGINEER.

5.) THE CONTRACTOR SHALL CALL AND COORDINATE WITH DIGSAFE 1-888-344-7233 AT LEAST 72 HOURS PRIOR TO COMMENCING ANY EXCAVATION ON PUBLIC OR PRIVATE PROPERTY.

6.) SEE DETAILS CONCERNING SITE LAYOUT, DRAINAGE, UTILITY AND SEDIMENT AND EROSION CONTROLS.

7.) ALL CATCH BASINS SHALL BE PRE-CAST H-20 LOADING AND SHALL BE EQUIPPED WITH DEEP SUMPS (4' MIN.) AND HOODS (SEE DETAILS) HOODS ARE TO BE "THE ELIMINATOR" BY KLEANSTREAM. RIMS ARE TO BE NHDOT "B" STYLE AND SHALL BE SET FLUSH WITH FINISH GRADE, UNLESS OTHERWISE INSTRUCTED DURING CONSTRUCTION BY ROCHESTER ENGINEERING. RIMS ABOVE FINISH GRADE WILL BE NOT BE ACCEPTED. ALL RIMS, GRATES AND COVERS ARE TO BE U.S.A MADE.

8.) ALL DRAINAGE PIPE IS TO BE HDPE M-12 ASTM F2948. INDIVIDUAL PIPE SIZES ARE SPECIFIED.

9.) ALL ELEVATIONS TO BE VERIFIED BY THE CONTRACTOR PRIOR TO CONSTRUCTION. THE DESIGN ENGINEER IS TO BE NOTIFIED IMMEDIATELY OF ANY DISCREPANCY. TEMPORARY BENCHMARKS (T.B.M.) ARE TO BE PROVIDED BY THE DESIGN ENGINEER.

10.) NOTE THAT THE PROJECT IS SUBJECT TO THE EPA NPDES PHASE II. THE NOTICE OF INTENT (NOI) MUST BE FILED ALONG WITH A STORMWATER POLLUTION PREVENTION PLAN (SWPPP). WEEKLY INSPECTIONS WILL BE CONDUCTED BY THE DESIGN ENGINEER.

11.) UPON FINAL COMPLETION AND SITE STABILIZATION THE DRAINAGE SYSTEM IS TO BE CLEANED OF ALL DEBRIS TO INCLUDE THE PUMPING OF THE BASIN SUMPS.

12.) ALL UNPAVED AREAS ARE TO RECEIVE 4" QUALITY LOAM AND SEED.

13.) REFERENCE IS MADE THE STORMWATER POLLUTION PREVENTION PLAN (SWPPP) DATED _____. A COPY OF THE SWPPP IS TO BE MAINTAINED ON SITE AT ALL TIMES PER THE EPA CONSTRUCTION GENERAL PERMIT (CGP). EPA NOTICE OF INTENT (NOI) SUBMITTED TO THE EPA ON _____

14.) INSPECTIONS TO BE CONDUCTED ONCE PER EVERY SEVEN DAYS AND AT AN INCREASED FREQUENCY INCLUDING WITHIN 24-HOURS OF A 0.25 INCH RAIN EVENT. INSPECTIONS TO BE CONDUCTED BY A "QUALIFIED PERSON" AS DEFINED BY EPA CGP 4.1.1 AND INSPECTION REPORTS SUBMITTED TO THE CITY OF ROCHESTER, NH, ENGINEERING DEPARTMENT WITHIN 24 HOURS IN ACCORDANCE WITH CGP 4.1.7 AND MAINTAINED BY THE OWNER FOR A PERIOD OF THREE YEARS AFTER THE NOTICE OF TERMINATION (NOT) IS SUBMITTED.

15.) SEE ALSO "STORMWATER SYSTEM OPERATIONS AND MAINTENANCE PLAN & INSPECTION AND MAINTENANCE MANUAL" DATED APRIL 8, 2013 (REVISED 4/20/15) WITH BMP PLAN WHICH REQUIRES INSPECTION AND MAINTENANCE RECORDS BE SUPPLIED TO CITY OF ROCHESTER, NH, ENGINEERING DEPARTMENT.

16.) SILT FENCE MAY BE SUBSTITUTED WITH SILT SOXX OR EROSION CONTROL MIX BERM.

17.) THE CONTRACTOR SHALL NOT COMPACT SOIL IN THE RAIN GARDEN AREAS.

LEGEND:

- 3/4" REBAR W/ID CAP(TO BE SET)
- IRON BOUND (FND)
- GRANITE BOUND (FND)
- STONE BOUND (FND)
- UTILITY POLE
- EXISTING FIRE HYDRANT
- EXISTING SEWER MANHOLE
- EXISTING WATER VALVE
- BENCHMARK
- PROPOSED CATCH BASIN
- PROPOSED CULVERT & FLARED END SECTION
- W — APPROXIMATE LOCATION OF WATER LINE
- S — APPROXIMATE LOCATION OF SEWER LINE
- TREE LINE, EXISTING OR PROPOSED
- EOP — EDGE OF PAVEMENT (EXISTING)
- EOP-TBR — EDGE OF PAVEMENT (EXISTING – TBR)
- PROP. EOP — EDGE OF PAVEMENT (PROPOSED)
- PROPOSED STOCKADE FENCE
- 65 — EXISTING MAJOR CONTOUR
- 64 — EXISTING MINOR CONTOUR
- P65 — PROPOSED MAJOR CONTOUR
- P64 — PROPOSED MINOR CONTOUR
- SILT FENCE / EROSION MIX BERM
- FILTREXX 12" SILT SOXX
- ORANGE CONSTRUCTION PERIMETER FENCE
- RIP RAP STONE CHECK DAM
- RIP RAP OUTLET PROTECTION / LEVEL SPREADER
- E101 / E1 — DETAIL SHEET / DETAIL

ROCHESTER PLANNING # 216-29-GRD-2015

REVISION	DATE	DESCRIPTION
1	11-5-15	PER NHDOT DRIVEWAY PERMIT APPLICATION
2	8-04-15	REDESIGN FOR 30' ACCESS EASEMENT
3	8-22-15	PER N.O.D. AND CONDITIONS OF APPROVAL
4	9-25-15	PER ROCHESTER TRC REVIEW
5	4-08-16	POST-APPLICATION TECHNICAL REVISIONS

PROPOSED SEDIMENT & EROSION CONTROL PLAN
LAND OF
21 FARMINGTON ROAD LLC
21 FARMINGTON ROAD, ROUTE 11
ROCHESTER, NH 03867
TAX MAP 216, LOT 29

BERRY SURVEYING & ENGINEERING
335 SECOND CROWN POINT ROAD
BARRINGTON, NH 03825 (332-2863)

SCALE : 1 IN. EQUALS 20 FT.
DATE : MARCH 30, 2015
FILE NO. : DB 2014-149

STATE OF NEW HAMPSHIRE — KENNETH A. BERRY No. 14243 — LICENSED PROFESSIONAL ENGINEER

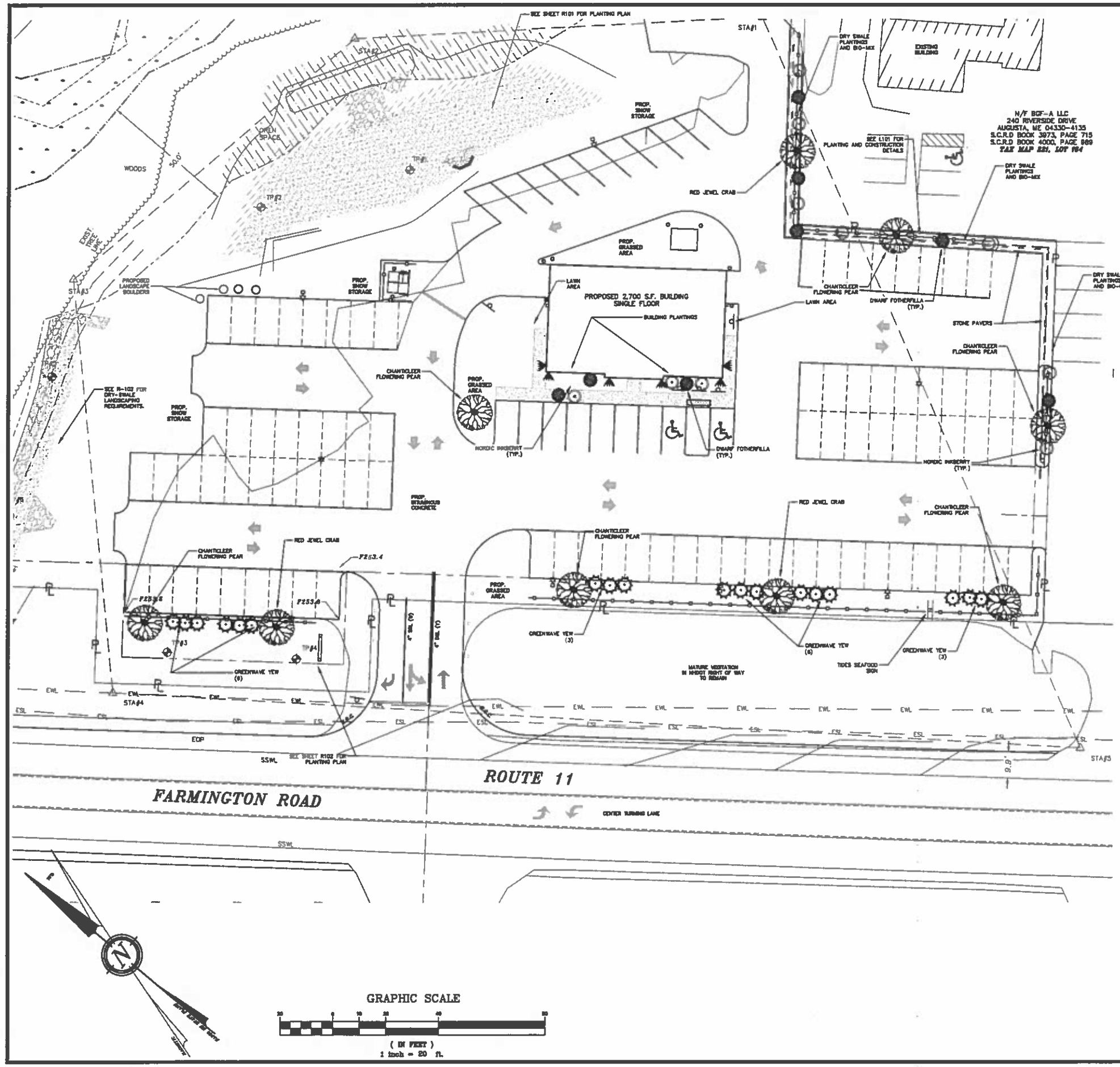

NOTES:

1.) OWNER: 21 FARMINGTON ROAD LLC.

2.) ROCHESTER TAX MAP 216, LOT 29

3.) S.C.R.D BOOK 3342, PAGE 185

4.) CALL DIG SAFE PRIOR TO BEGINNING WORK. (1-888-344-7233). THE LANDSCAPE CONTRACTOR IS ADVISED OF THE PRESENCE OF UNDERGROUND UTILITIES AND SHALL VERIFY THE EXISTENCE AND LOCATION OF THE SAME BEFORE COMMENCING AND DIGGING OPERATIONS. THE LANDSCAPE CONTRACTOR SHALL REPLACE OR REPAIR UTILITIES, PAVING, WALKS, CURBING, ETC DAMAGED IN PERFORMANCE OF THIS JOB AT NO ADDITIONAL COST TO THE OWNER OR GENERAL CONTRACTOR.

5.) CONTRACTOR SHALL THOROUGHLY FAMILIARIZE THEMSELVES WITH ALL SITE CONDITIONSPRIOR TO CONSTRUCTION BIDDING.

6.) PROVIDE SMOOTH TRANSITION WHERE NEW WORK MEETS EXISTING CONDITIONS.

7.) ALL PLANT MATERIAL INSTALLED SHALL MEET THE SPECIFICATIONS OF "AMERICAN STANDARD FOR NURSERY STOCK" BY THE AMERICAN ASSOCIATION OF NURSERYMEN

8.) ALL PLANT MATERIALS SHALL BE FREE FROM INSECTS AND DISEASE.

9.) ALL PLANTINGS SHALL BE DONE IN ACCORDANCE WITH ACCEPTABLE HORTICULTURAL PRACTICES. THIS IS TO INCLUDE PROPER PLANTING MIX, PLANT BED AND TREE PIT PREPARATION, PRUNING STAKING OR GUYING, WRAPPING, SPRAYING, FERTILIZATION, PLANTING AND ADEQUATE MAINTENANCE UNTIL ACCEPTANCE FROM OWNER.

10.) ALL GRASS, OTHER VEGETATION AND DEBRIS SHALL BE REMOVED FROM ALL PLANTING AREAS PRIOR TO PLANTING.

11.) THE GENERAL CONTRACTOR SHALL BE RESPONSIBLE FOR THE PROTECTION OF EXISTING AND NEWLY PLANTED TREES AND SHRUBS DURING THE CONSTRUCTION PROCESS. WHERE REQUIRED, THE CONTRACTOR SHALL INSTALL TEMPORARY FENCING (SNOW OR EQUAL) AROUND EXISTING TREES AND SHRUBS THAT COULD BE IMPACTED BY THE CONSTRUCTION PROCESS. STORAGE OF CONSTRUCTION EQUIPMENT, CONSTRUCTION MATERIALS, SNOW STORAGE AND OR VEHICLE PARKING SHALL NOT BE PERMITTED WITHIN THE DRIP LINE OF TREES OR TWENTY FEET WHICH EVER IS GREATER.

12.) NEW PLANTINGS SHALL BE INSTALLED PER PROJECT DRAWINGS AND SPECIFICATION THAT INCLUDE FERTILIZATION AND MULCHING AS REQUIRED.

13.) ALL SHRUB BEDS AND TREE PITS SHALL BE MULCHED WITH 4" CLEAN SHREDDED AGED PINEBARK

14.) WHERE INDICATED ON PLAN, PLANTING SOIL MIXTURE FOR GROUND COVER AND PERENNIAL BED AREAS SHALL CONSIST OF FOUR PARTS TOPSOIL, TWO PARTS SPHAGNUM PEAT MOSS, AND ONE PART HORTICULTURAL PERLITE BY VOLUME. PEAT MOSS MAY BE SUBSTITUTED WITH WELL-ROTTED OR DEHYDRATED MANURE OR COMPOST. ROTOTILL BEDS TO A DEPTH OF 8 INCHES.

15.) MAINTENANCE OF NEW PLANTINGS AND LAWNS SHALL BE THE RESPONSIBILITY OF THE GENERAL CONTRACTOR AND/OR LANDSCAPE SUBCONTRACTOR UNTIL ACCEPTANCE BY THE OWNER. RESPONSIBILITIES SHALL INCLUDE WATERING WEEDING AND MOWING AS NECESSARY. ALL PLANT MATERIAL SHALL BE GUARANTEED FOR A PERIOD OF ONE YEAR FROM THE DATE OF ACCEPTANCE. REPLACEMENT MATERIAL SHALL BE GUARANTEED FOR AND ADDITIONAL YEAR FROM TIME OF INSTALLATION.

16.) THE GENERAL CONTRACTOR SHALL BE RESPONSIBLE FOR MAINTAINING ALL TEMPORARY EROSION CONTROL MEASURES DURING THE CONSTRUCTION PHASE AND UNTIL ALL AREAS HAVE BEEN STABILIZED AND ACCEPTED BY THE OWNER. THE GENERAL CONTRACTOR SHALL PROVIDE WEEKLY INSPECTIONS OF EROSION MEASURES AND IMMEDIATELY AFTER STORM EVENTS AND REPAIR AS NECESSARY.

17.) THE GENERAL CONTRACTOR AND OR THE LANDSCAPE SUBCONTRACTOR SHALL BE RESPONSIBLE FOR THE REMOVAL OF ALL TREE GUYING MATERIAL ONCE PLANT MATERIAL HAS BEEN ESTABLISHED. (MINIMUM OF ONE GROWING SEASON). ALL TEMPORARY EROSION CONTROL MEASURE SHALL BE REMOVED ONCE STABILIZATION OF DISTURBANCE HAS BEEN ACCEPTED BY OWNER.

18.) THE GENERAL CONTRACTOR SHALL BE RESPONSIBLE FOR A MINIMUM OF TWO MOWINGS FOR ALL TURF AREAS OR UNTIL ACCEPTANCE BY THE OWNER. A MINIMUM UNIFORM 75% CATCH OF TURF IS REQUIRED FOR ACCEPTANCE.

19.) ALL PLANTINGS SHALL BE WATERED REGULARLY DURING THEIR FIRST YEAR AND MAINTAINED PERMANENTLY IN GOOD GROWING CONDITION AS AN EFFECTIVE VISUAL SCREEN.

20.) SHRUBS OR TREES WHICH DIE SHALL BE REPLACED WITHIN ONE GROWING SEASON WITH NEW SHRUBS OR TREES TO ENSURE CONTINUED COMPLIANCE WITH APPLICABLE LANDSCAPING REQUIREMENTS.

21.) ALL REQUIRED LANDSCAPING SHALL BE INSTALLED BEFORE OCCUPANCY, OR WITHIN SIX MONTHS IF OCCUPANCY OCCURS DURING WINTER CONDITIONS.

22.) TREES ARE TO BE 6' TALL AT PLANTING

23.) 4" AGED PINEBARK MULCH AND A WEED BARRIER (TY-PAR FABRIC OR APPROVED EQUAL) SHALL BE APPLIED TO ALL SHRUB AND GROUND COVER BEDS. INSTALL WEED BARRIER AS PER MANUFACTURERS RECOMMENDATIONS.

24.) PLANT-PIT BACK-FILL SHALL BE MIXED AT A RATE OF 7 PARTS OF TOPSOIL TO 2 PARTS OF DEHYDRATED COW MANURE. SLOW RELEASE FERTILIZER SHALL BE APPLIED AS PER MANUFACTURERS RECOMMENDATIONS. USE EXISTING ON-SITE TOPSOIL AS PART OF BACK-FILL WHEN AVAILABLE.

25.) ALL LANDSCAPED AREAS NOT PLANTED WITH TREES, SHRUBS OR GROUNDCOVER SHALL BE RESTORED WITH LOAM AND SEED.

26.) TOPSOIL WILL BE TESTED FOR FERTILIZATION REQUIREMENTS, AND SLOW RELEASE ENVIRONMENTALLY FRIENDLY FERTILIZER WILL BE APPLIED AT THE RECOMMENDED RATES.

27.) ALL DISTURBED WETLAND BUFFER AREAS, EXCEPT FOR AREAS THAT ARE PART OF THE DRAINAGE SYSTEM, ARE TO BE RESEEDED WITH A CONSERVATION SEED MIX AND ONLY MOWED TWICE PER YEAR.

TREES AND SHRUBS

Qty	Botanical Name / Common Name	Root	Size
8	Pyrus calleryana 'Chanticleer' / Chanticleer flowering pear	Cont.	2"-2.5" Caliper, balled and burlapped
4	Malus / Red Jewel Crab Apple	Cont.	2"-2.5" Caliper, balled and burlapped
10	Fothergilla gardenii / Dwarf Fothergilla	Cont.	2' Ht. or 3 Gal.
11	Ilex glabra 'Nordia' / Nordia Inkberry	Cont.	2' Ht. or 3 Gal.
18	Taxus media 'Greenwave' / Greenwave Yew	Cont.	2' Ht. or 3 Gal.

PERENNIALS & GROUND COVERS

Qty	Botanical Name / Common Name	Root	Size	Remark
68	Rudbeckia fulgida / Black-Eyed Susan	Cont.	2 GL	24" OC

ROCHESTER PLANNING # 216-29-GRD-2015

REVISION	DATE	DESCRIPTION
#5	11-05-15	PER NHDOT DRIVEWAY PERMIT APPLICATION
#4	8-04-15	REDESIGN FOR 30' ACCESS EASEMENT
#3	6-22-15	PER H.C.D. AND CONDITIONS OF APPROVAL
#2	5-26-15	PER NHDOT DRIVEWAY PERMIT
#1	4-09-15	POST-APPLICATION TECHNICAL REVISIONS

PROPOSED LANDSCAPING PLAN
LAND OF
21 FARMINGTON ROAD LLC
21 FARMINGTON ROAD, ROUTE 11
ROCHESTER, NH 03867
TAX MAP 216, LOT 29

BERRY SURVEYING & ENGINEERING
335 SECOND CROWN POINT ROAD
BARRINGTON, NH 03825 (332-2863)

SCALE : 1 IN. EQUALS 20 FT.
DATE : MARCH 30, 2015
FILE NO. : DB 2014 -149

STATE OF NEW HAMPSHIRE · KENNETH A. BERRY No. 14243 · LICENSED · PROFESSIONAL ENGINEER

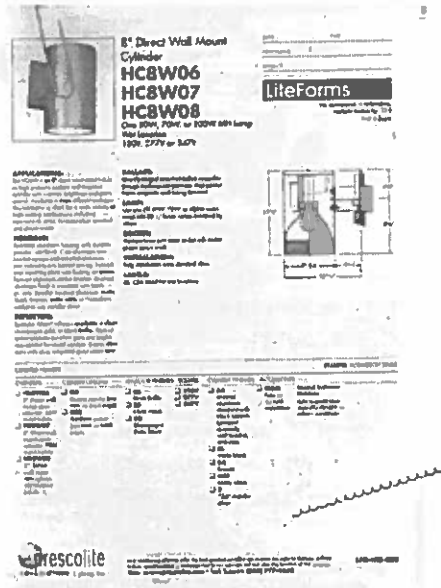

WALL MOUNTED LIGHTING LAMP "D"

NOT TO SCALE

WALL MOUNTED LIGHTING LAMP "E"

NOT TO SCALE

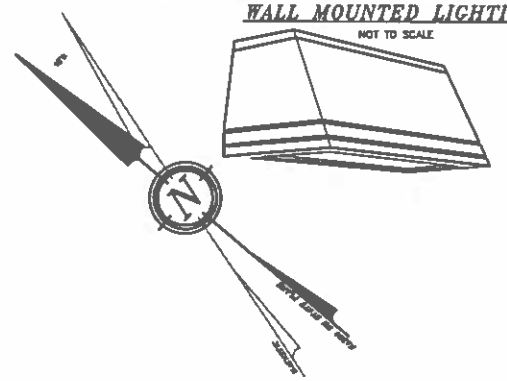

NOTES:

1.) OWNER: 21 FARMINGTON ROAD LLC
549 US HIGHWAY 1 BYP
PORTSMOUTH, NH 03801-4131

2.) TAX MAP 216, LOT 29

3.) LOT AREA: 93,832 Sq. Ft., 2.15 Ac.

4.) S.C.R.D. BOOK 4248, PAGE 628

5.) REFER TO THE SITE PLAN FOR POLE PLACEMENT AND HEIGHTS.

6.) ALL LAMPS ARE NIGHT SKY COMPLIANT AND ARE TO BE DOWN LIT. LAMPS B AND C HAVE REAR SHIELDS FOR FORWARD THROW ONLY. LAMP A IS NOT SHIELDED.

7.) ALL LOT LAMPS ARE TO BE PLACED ON A SINGLE TIMER WHICH TURNS THE LAMPS OFF AT 11:00 P.M. AND TURNS THEM BACK ON AT 4:30 A.M. & OFF AGAIN AT 7:00 A.M. BUILDING MOUNTED LAMPS ARE TO BE REGULATED BY A PHOTO CELL AND ARE TO STAY ON ALL NIGHT FOR SECURITY REASONS. PLEASE NOTE BUILDING LAMPS ARE EITHER LOW LUMEN OR FULL CUT OFF.

LUMINAIRE SCHEDULE

Symbol	Label	Qty	Catalog Number	Description	Lamp	File	Lumens	LLF	Watts
	A	2	DSX0 LED 40C 1000 40K T3M MVOLT	DSX0 LED WITH (2) 20 LED LIGHT ENGINE, TYPE T3M OPTIC, 4000K, @ 1000mA	LED	DSX0_LED_40C_1000_40K_T3M_MVOLT.ies	Absolute	0.88	138
	B	2	DSX0 LED 40C 1000 40K T3M MVOLT HS	DSX0 LED WITH (2) 20 LED LIGHT ENGINE, TYPE T3M OPTIC, 4000K, @ 1000mA WITH HOUSE SIDE SHIELD	LED	DSX0_LED_40C_1000_40K_T3M_MVOLT_HS.ies	Absolute	0.88	138
	C	4	DSX0 LED 40C 1000 40K TFTM MVOLT HS	DSX0 LED WITH (2) 20 LED LIGHT ENGINE, TYPE TFTM OPTIC, 4000K, @ 1000mA WITH HOUSE SIDE SHIELD	LED	DSX0_LED_40C_1000_40K_TFTM_MVOLT_HS.ies	Absolute	0.88	138
	D	6	ODSL10 SRC	CRAFTSTON WALL MOUNTED SMALL DECORATIVE LANTERN, ONE LAMP 13W SPIRAL COMPACT FLUORESCENT, WHITE GLASS DIFFUSER 4.25" DIA. X 6.85" HIGH, ELECTRONIC BALLAST	ONE 13-WATT T4 SPIRAL COMPACT FLUORESCENT, VERTICAL BASE UP POSITION.	ODSL10_SRC.ies	900	1.00	12.6
	E	2	WSTM 70M MD	MINIATURE TRAPEZOID ARCHITECTURAL SCONCE, 70-WATT METAL HALIDE, MEDIUM DISTRIBUTION, HYDROPORM REFLECTOR CLEAR, FLAT GLASS LENS. MEETS THE "NIGHTTIME FRIENDLY" CRITERIA	ONE 70-WATT CLEAR ED17 METAL HALIDE, HORIZONTAL POSITIONPOS.	WSTM_70M_MD.ies	5500	0.88	70

STATISTICS

Description	Symbol	Avg	Max	Min	Max/Min	Avg/Min
Calc Zone #1	+	0.8 fc	3.6 fc	0.0 fc	N/A	N/A
Calc Zone #2	×	1.4 fc	3.6 fc	0.2 fc	18.0:1	7.0:1

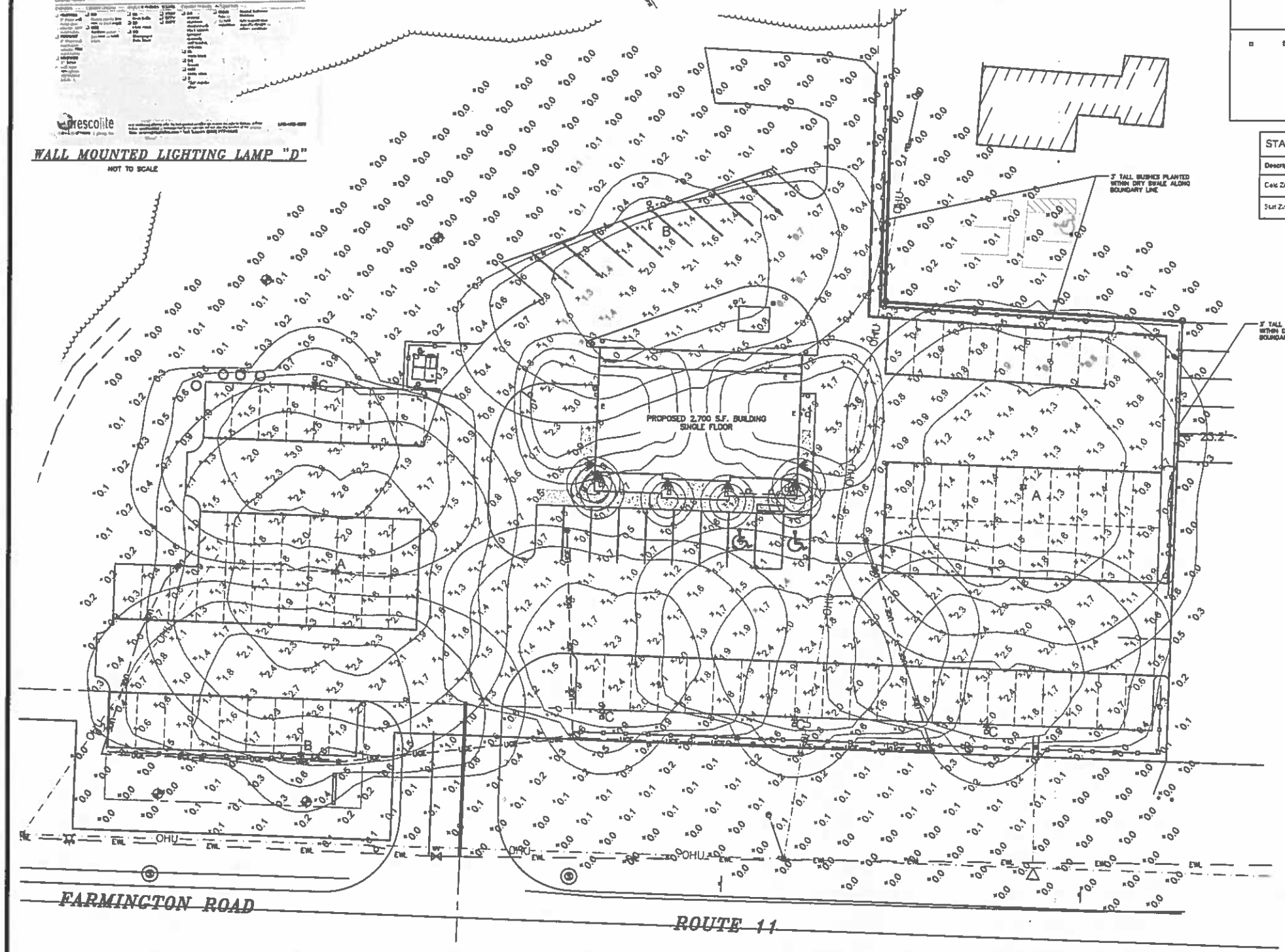

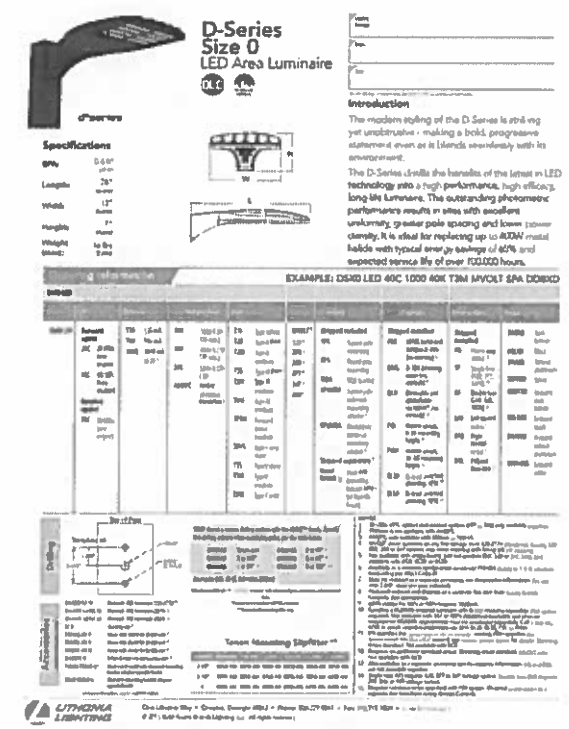

POLE MOUNTED LIGHTING LAMP "A,B,C."

NOT TO SCALE

GRAPHIC SCALE

(IN FEET)
1 inch = 20 ft.

REVISION	DATE	DESCRIPTION
#2	5-04-15	REDESIGN FOR 30' ACCESS EASEMENT
#3	5-22-15	PER N.O.D. AND CONDITIONS OF APPROVAL
#4	4-09-15	PER PROJECT TRC REVIEW
		POST-APPLICATION TECHNICAL REVISIONS

ROCHESTER PLANNING # 216-29-GRD-2015

PROPOSED LIGHTING PLAN
LAND OF
21 FARMINGTON ROAD LLC
21 FARMINGTON ROAD, ROUTE 11
ROCHESTER, NH 03867
TAX MAP 216, LOT 29

BERRY SURVEYING & ENGINEERING
335 SECOND CROWN POINT ROAD
BARRINGTON, NH 03825 (332-2863)

SCALE : 1 IN. EQUALS 20 FT.
DATE : MARCH 30, 2015
FILE NO. : DB 2014-149

STATE OF NEW HAMPSHIRE
KENNETH A. BERRY
No. 14243
LICENSED
PROFESSIONAL ENGINEER

SHEET 10 OF 20

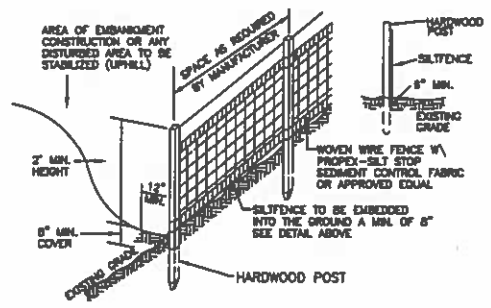

SILT FENCE CONSTRUCTION SPECIFICATIONS
1. WOVEN WIRE FENCE TO BE FASTENED SECURELY TO FENCE POSTS WITH WIRE TIES OR STAPLES AND FILTER CLOTH SHALL BE FASTENED TO WOVEN WIRE EVERY 24" AT TOP MID AND BOTTOM SECTIONS AND BE EMBEDDED INTO GROUND A MINIMUM OF 8" THE FENCE POSTS SHALL BE A MINIMUM 48" LONG, SPACED A
2. MAXIMUM 10' APART, AND DRIVEN A MINIMUM OF 16" INTO THE GROUND WHEN TWO SECTIONS OF FILTER CLOTH ADJOIN EACH OTHER,
3. THE ENDS OF THE FABRIC SHALL BE OVERLAPPED BY SIX INCHES, FOLDED AND STAPLED TO PREVENT SEDIMENT FROM BY-PASSING MAINTENANCE SHALL BE PERFORMED AS NEEDED AND SEDIMENT
4. REMOVED WHEN "BULGES" DEVELOP IN THE SILT FENCE AND PROPERLY DISPOSED OF PLACE THE ENDS OF THE SILT FENCE UP CONTOUR TO PROVIDE
5. FOR SEDIMENT STORAGE SILT FENCES SHALL BE REMOVED WHEN NO LONGER NEEDED AND
6. THE SEDIMENT COLLECTED SHALL BE DISPOSED AS DIRECTED BY THE ENGINEER. THE AREA DISTURBED BY THE REMOVAL SHALL BE SMOOTHED AND RE-VEGETATED

SILT FENCE MAINTENANCE
1. SILT FENCES SHALL BE INSPECTED IMMEDIATELY AFTER EACH RAINFALL AND AT LEAST DAILY DURING PROLONGED RAINFALL. ANY REPAIRS THAT ARE REQUIRED SHALL BE MADE IMMEDIATELY IF THE FABRIC ON A SILT FENCE SHOULD DECOMPOSE OR BECOME
2. INEFFECTIVE DURING THE EXPECTED LIFE OF THE FENCE, THE FABRIC SHALL BE REPLACED PROMPTLY. SEDIMENT DEPOSITS SHOULD BE INSPECTED AFTER EVERY STORM EVENT.
3. THE DEPOSITS SHOULD BE REMOVED WHEN THEY REACH APPROXIMATELY ONE HALF THE HEIGHT OF THE BARRIER. SEDIMENT DEPOSITS THAT ARE REMOVED OR LEFT IN PLACE AFTER THE
4. FABRIC HAS BEEN REMOVED SHALL BE GRADED TO CONFORM WITH THE EXISTING TOPOGRAPHY AND VEGETATED.

E1 SILT FENCE DETAIL
N.T.S.

E2

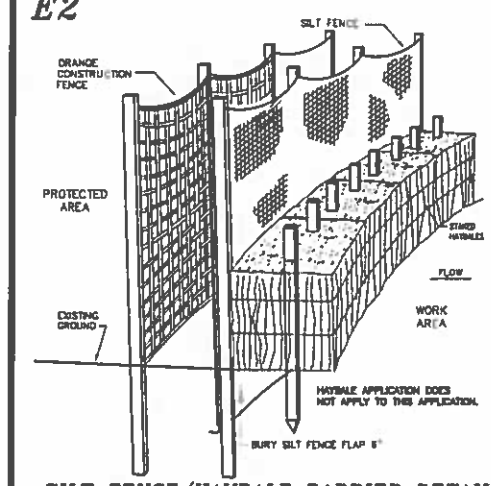

SILT FENCE/HAYBALE BARRIER DETAIL
THIS METHOD TO BE USED ALONG THE REAR OF THE PROPERTY

E3

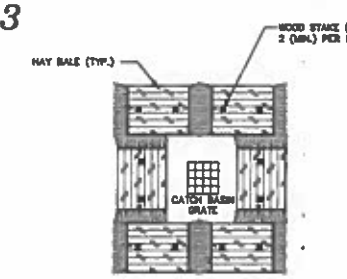

NOTE:
BALES TO REMAIN UNTIL SUBBASE PREPARATION IS COMPLETE AND PAVING IS TO BEGIN OR UNTIL ALL UPSTREAM AREAS ARE STABILIZED WITH VEGETATION.

CONSTRUCTION SPECIFICATIONS
FOR STRAW OR HAY BALE BARRIERS

1. STRUCTURES SHALL BE INSTALLED ACCORDING TO THE DIMENSIONS SHOWN ON THE PLANS AT THE APPROPRIATE SPACING.
2. CONSTRUCTION OPERATIONS SHALL BE CARRIED OUT IN SUCH A MANNER SO THAT EROSION AND AIR AND WATER POLLUTION WILL BE MINIMIZED.
3. WHEN HAY BALES ARE USED, THE BALES SHALL BE EMBEDDED AT LEAST 4 INCHES INTO THE SOIL. WHEN TIMBER STRUCTURES ARE USED, THE TIMBER SHALL EXTEND AT LEAST 16 INCHES INTO THE SOIL.
4. HAY OR STRAW BALES SHALL BE ANCHORED INTO THE SOIL USING 2" x 2" STAKES DRIVEN THROUGH THE BALES AND AT LEAST 18 INCHES INTO THE SOIL.
5. SEEDING, FERTILIZING, AND MULCHING SHALL CONFORM TO THE RECOMMENDATIONS IN THE APPROPRIATE VEGETATIVE BMP.
6. STRUCTURES SHALL BE REMOVED FROM THE CHANNEL WHEN THEIR USEFUL LIFE HAS BEEN COMPLETED.

SEDIMENT CONTROL AT CATCH BASINS
NOT TO SCALE

E4

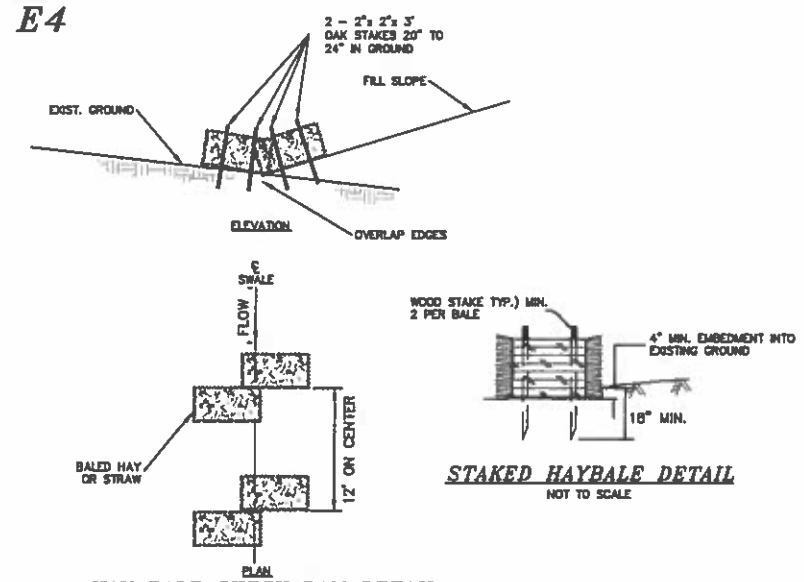

STAKED HAYBALE DETAIL
NOT TO SCALE

HAY BALE CHECK DAM DETAIL
(NOT TO SCALE)

E5 STABILIZED CONSTRUCTION ENTRANCE

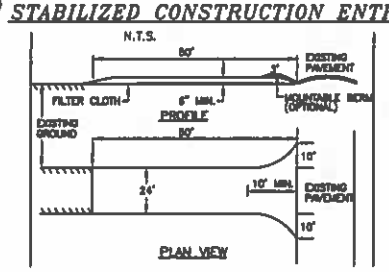

1. STONE FOR A STABILIZED CONSTRUCTION ENTRANCE SHALL BE 1 TO 2 INCH STONE, RECLAIMED STONE, OR RECYCLED CONCRETE EQUIVALENT.
2. THE LENGTH OF THE STABILIZED ENTRANCE SHALL NOT BE LESS THAN 50 FEET, EXCEPT FOR A SINGLE RESIDENTIAL LOT WHERE A 30 FOOT MINIMUM LENGTH WOULD APPLY.
3. THE THICKNESS OF THE STONE FOR THE STABILIZED ENTRANCE SHALL NOT BE LESS THAN 6 INCHES.
4. THE WIDTH OF THE ENTRANCE SHALL NOT BE LESS THAN THE FULL WIDTH OF THE ENTRANCE WHERE INGRESS OR EGRESS OCCURS OR 10 FEET, WHICH EVER IS GREATER.
5. GEOTEXTILE FILTER CLOTH SHALL BE PLACED OVER THE ENTIRE AREA PRIOR TO PLACING THE STONE. FILTER CLOTH IS NOT REQUIRED FOR A SINGLE FAMILY RESIDENCE LOT.
6. ALL SURFACE WATER THAT IS FLOWING TO OR DIVERTED TOWARD THE CONSTRUCTION ENTRANCE SHALL BE PIPED BENEATH THE ENTRANCE. IF PIPING IS IMPRACTICAL, A BERM WITH 5:1 SLOPES THAT CAN BE CROSSED BY VEHICLES MAY BE SUBSTITUTED FOR THE PIPE.
7. THE ENTRANCE SHALL BE MAINTAINED IN A CONDITION THAT WILL PREVENT TRACKING OR FLOWING OF SEDIMENT ONTO PUBLIC RIGHTS-OF-WAY. THIS MAY REQUIRE PERIODIC TOP DRESSING WITH ADDITIONAL STONE AS CONDITIONS DEMAND AND REPAIR AND/OR CLEAN OUT OF ANY MEASURES USED TO TRAP SEDIMENT. ALL SEDIMENT SPILLED, WASHED, OR TRACKED ONTO PUBLIC RIGHT-OF-WAY MUST BE REMOVED PROMPTLY.

E6 EROSION CONTROL MIX BERM

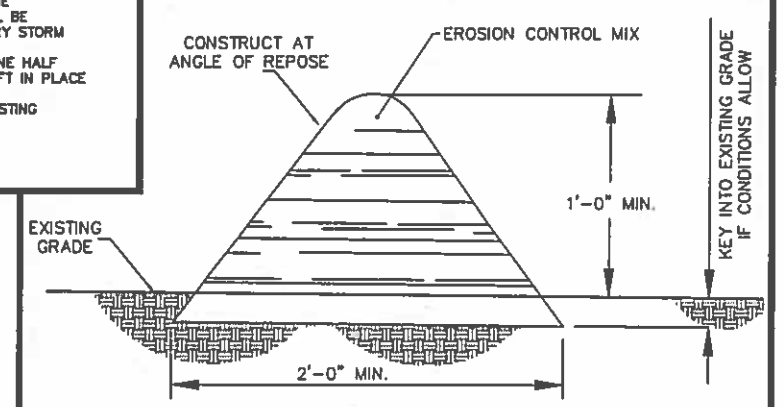

EROSION CONTROL MIX BERMS SHALL BE USED ONLY AS FOLLOWS:
(A) BERMS SHALL BE USED IN AREAS WHERE EROSION WILL OCCUR ONLY IN THE FORM OF SHEET EROSION AND THERE IS NO CONCENTRATION OF WATER IN A CHANNEL OR DRAINAGE WAY ABOVE THE BERM.
(B) THE BERMS SHALL BE INSTALLED FOLLOWING THE CONTOUR OF THE LAND AS CLOSLY AS POSSIBLE.
(C) THE BERMS SHALL BE INSTALLED ON SLOPES LESS THAN 5%.
(D) SUBJECT TO (E), BELOW, THE MIX SHALL HAVE AN ORGANIC PORTION BETWEEN 80 AND 100%, DRY WEIGHT BASIS, AND BE FIBROUS AND ELONGATED SUCH AS FROM SHREDDED BARK, STUMP GRINDINGS, COMPOSED BARK, OR EQUIVALENT MANUFACTURED PRODUCTS.
(E) WOOD AND BARK CHIPS, GROUND CONSTRUCTION DEBRIS, OR REPROCESSED WOOD PRODUCTS SHALL NOT BE USED AS ORGANIC MATERIAL.
(F) THE MIX SHALL NOT CONTAIN SILTS, CLAY, OR FINE SANDS.
(G) THE MIX SHALL HAVE A PARTICLE SIZE BY WEIGHT OF 70 TO 85% PASSING A 6-INCH SCREEN AND A MAXIMUM OF 85% PASSING THE 0.75-INCH SCREEN.
(H) THE MIX PH SHALL BE BETWEEN 5.0 AND 8.0.
(I) THE BERM SHALL BE AT LEAST 12 INCHES HIGH AND AT LEAST 2 FEET WIDE.

E7

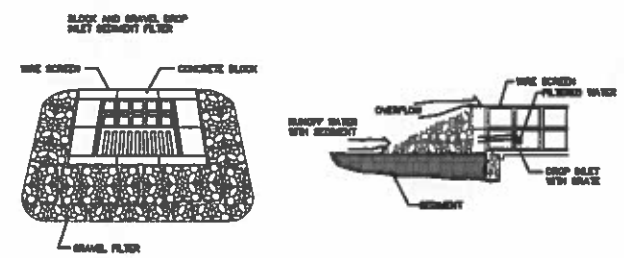

MAINTENANCE

ALL STRUCTURES SHOULD BE INSPECTED AFTER EVERY RAIN STORM AND REPAIRS MADE AS NECESSARY. SEDIMENT SHOULD BE REMOVED FROM TRAPPING DEVICES AFTER THE SEDIMENT HAS REACHED A MAXIMUM OF ONE HALF THE DEPTH OF THE TRAP. THE SEDIMENT SHOULD BE DISPOSED OF IN A SUITABLE AREA AND PROTECTED FROM EROSION BY EITHER STRUCTURE OR VEGETATIVE MEANS. THE TEMPORARY TRAPS SHOULD BE REMOVED AND THE AREA REPAIRED AS SOON AS THE CONTRIBUTING DRAINAGE AREA TO THE INLET HAS BEEN COMPLETELY STABILIZED.

BLOCK & GRAVEL DROP INLET SEDIMENT FILTER
NOT TO SCALE

TO BE USED IN ALL AREAS WHERE THERE WILL BE NO TRAFFIC.

E8 TEMPORARY EROSION CONTROL MEASURES

1. THE SMALLEST PRACTICAL AREA OF LAND SHALL BE EXPOSED AT ANY ONE TIME
2. EROSION, SEDIMENT AND DETENTION MEASURES SHALL BE INSTALLED AS SHOWN ON THE PLANS AND AT LOCATIONS AS REQUIRED, DIRECTED BY THE ENGINEER
3. ALL DISTURBED AREAS SHALL BE RETURNED TO ORIGINAL GRADES AND ELEVATIONS. DISTURBED AREAS SHALL BE LOAMED WITH A MINIMUM OF 4" OF LOAM AND SEEDED WITH NOT LESS THAN ONE POUND OF SEED PER 50 SQUARE YARDS OF AREA. (SEE SEED SPECIFICATIONS E102)

   3a. ALL DISTURBED AREAS WILL BE RESTABILIZED WITHIN 60 DAYS. AT ANY ONE TIME, NO MORE THAN 5 ACRES, (217,800 Sq. Ft.) WILL BE DISTURBED.
4. SILT FENCES AND STRAW OR HAY BALES BARRIERS SHALL BE INSPECTED PERIODICALLY AND AFTER EVERY RAIN DURING THE LIFE OF THE PROJECT. ALL DAMAGED AREAS SHALL BE REPAIRED, SEDIMENT DEPOSITS SHALL PERIODICALLY BE REMOVED AND DISPOSED OF.
5. AFTER ALL DISTURBED AREAS HAVE BEEN STABILIZED, THE TEMPORARY EROSION CONTROL MEASURES ARE TO BE REMOVED AND THE AREA DISTURBED BY THE REMOVAL SMOOTHED AND RE-VEGETATED
6. PER THE EPA REQUIREMENTS THERE WILL BE A LOG OF THE EROSION CONTROL INSPECTIONS EVERY 7-14 DAYS PLEASE FIND SWPPP PREPARED BY BS&E (AFTER LOCAL APPROVAL)
7. DITCHES, SWALES, AND BASINS SHALL BE STABILIZED PRIOR TO DIRECTING RUNOFF TO THEM.
8. ALL EROSION CONTROLS SHALL BE INSPECTED WEEKLY AND WITHIN 24 HOURS AFTER 0.5" OR GREATER RAIN EVENT

E9 STONE CHECK DAM

L= THE DISTANCE SUCH THAT POINTS A AND B ARE OF EQUAL ELEVATION.

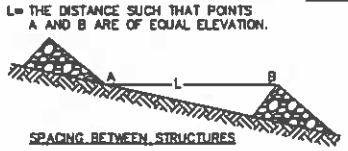

SPACING BETWEEN STRUCTURES

NOTE: KEY STONE INTO CHANNEL BANKS AND EXTEND IT BEYOND THE ABUTMENTS A MINIUM OF 18" TO PREVENT FLOW AROUND THE DAM.

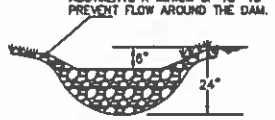

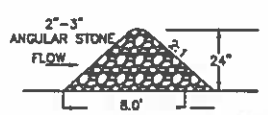

STONE GRADE STABILIZATION STRUCTURE

1.) CHECK DAMS SHOULD BE INSTALLED BEFORE RUNOFF IS DIRECTED TO THE SWALE OR DRAINAGE DITCH
2.) THE MAXIMUM CONTRIBUTING DRAINAGE AREA TO THE DAM SHOULD BE LESS THEN ONE ACRE.
3.) THE MAXIMUM HEIGHT OF THE DAM SHOULD BE TWO FEET.
4.) THE CENTER OF THE DAM SHOULD BE AT LEAST SIX INCHES LOWER THAN THE OUTER EDGES.
5.) THE MAXIMUM SPACING IS AS SHOWN ON THE PROJECT SITE PLANS.
6.) CHECK DAMS WILL NOT BE USED IN A FLOWING STREAM.
7.) TEMPORARY CHECK DAMS WILL BE REMOVED ONCE THE SWALE OR DITCH IS DETERMINED STABLE.

E10 FILTREXX SEDIMENT CONTROL
NOT TO SCALE

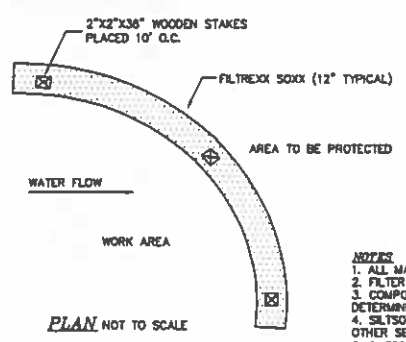

PLAN NOT TO SCALE

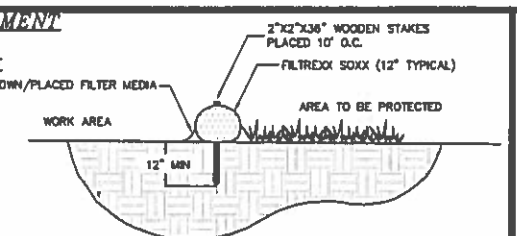

SECTION NOT TO SCALE

NOTES
1. ALL MATERIAL TO MEET FILTREXX SPECIFICATIONS.
2. FILTER MEDIA FILL TO MEET APPLICATION REQUIRMENTS.
3. COMPOST MATERIAL TO BE DISPERSED ON SITE, AS DETERMINED BY ENGINEER.
4. SILTSOXX MAY BE USED IN PLACE OF SILT FENCE OR OTHER SEDIMENT BARRIERS.
5. SILTSOXX COMPOST/SOIL/ROCK/SEED FILL MATERIAL SHALL BE ADJUSTED AS NECESSARY TO MEET THE REQUIRMENTS OF THE SPECIFIC APPLICATION.
6. FILTREXX SOXX IS A REGISTERED TRADEMARK OF FILTRESS INTERNATIONAL, LLC.

Filtrexx International, LLC
35461 Crafton Eastern Rd | Crafton, Oh 44044
440-926-2607 | fax: 440-926-4021
WWW.FILTREXX.COM

E11

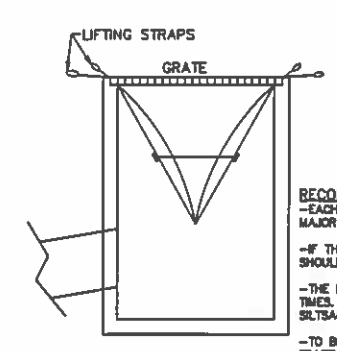

RECOMMENDED MAINTENANCE SCHEDULE
-EACH SILTSACK SHOULD BE INSPECTED AFTER EVERY MAJOR RAIN EVENT.
-IF THERE HAVE BEEN NO MAJOR EVENTS, SILTSACK SHOULD BE INSPECTED EVERY 2-3 WEEKS.
-THE RESTRAINT CORD SHOULD BE VISIBLE AT ALL TIMES. IF CORD IS COVERED WITH SEDIMENT, THE SILTSACK SHOULD BE EMPTIED.
-TO BE USED IN ALL AREAS WHERE THERE WILL BE TRAFFIC.

SILTSACK DETAIL
NOT TO SCALE

E-101

ROCHESTER PLANNING FILE: 216-29-GRD-2015

REVISION	DATE	DESCRIPTION
#3	5-22-15	PER N.O.D. AND CONDITIONS OF APPROVAL
#2	4-23-15	PER ROCHESTER TRC REVIEW
#1	4-08-15	POST-APPLICATION TECHNICAL REVISIONS

SEDIMENT AND EROSION CONTROL DETAILS
LAND OF
21 FARMINGTON ROAD LLC
21 FARMINGTON ROAD, ROUTE 11
ROCHESTER, NH 03867
TAX MAP 216, LOT 29

BERRY SURVEYING & ENGINEERING
335 SECOND CROWN POINT ROAD
BARRINGTON, NH 03825 (332-2863)

SCALE : AS MARKED
DATE : MARCH 30, 2015
FILE NO. : DB 2014-149

STATE OF NEW HAMPSHIRE
KENNETH A. BERRY
No. 14243
LICENSED
PROFESSIONAL ENGINEER

SHEET 11 OF 20

E12

STANDARD LEVEL SPREADER

NOT TO SCALE

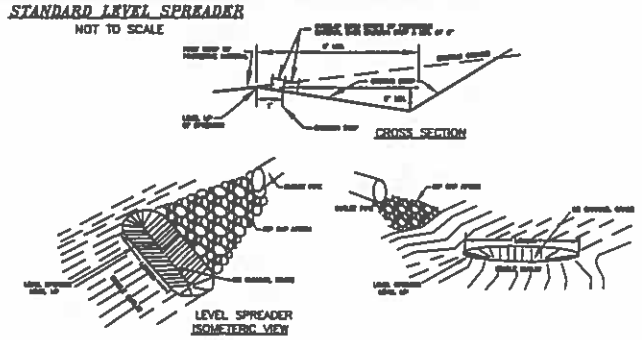

1. CONSTRUCT THE LEVEL SPREADER LIP ON A ZERO PERCENT GRADE TO INSURE UNIFORM SPREADING OF RUNOFF.
2. LEVEL SPREADER SHALL BE CONSTRUCTED ON UNDISTURBED SOIL AND NOT ON FILL.
3. AN EROSION STOP SHALL BE PLACED VERTICALLY A MINIMUM OF SIX INCHES DEEP IN A SLIT TRENCH ONE FOOT BACK OF THE LEVEL LIP AND PARALLEL TO THE LIP. THE EROSION STOP SHALL EXTEND THE ENTIRE LENGTH OF THE LEVEL LIP.
4. THE ENTIRE LEVEL LIP AREA SHALL BE PROTECTED BY PLACING TWO STRIPS OF JUTE OR EXCELSIOR MATTING ALONG THE LIP. EACH STRIP SHALL OVERLAP THE EROSION STOP BY AT LEAST SIX INCHES.
5. THE ENTRANCE CHANNEL TO THE LEVEL SPREADER SHALL NOT EXCEED A 1 PERCENT GRADE FOR AT LEAST 50 FEET BEFORE ENTERING INTO THE SPREADER.
6. THE FLOW FROM THE LEVEL SPREADER SHALL OUTLET ONTO STABILIZED AREAS. WATER SHOULD NOT RE-CONCENTRATE IMMEDIATELY BELOW THE SPREADER.
7. PERIODIC INSPECTION AND REQUIRED MAINTENANCE SHALL BE PERFORMED.
8. MAINTENANCE: THE LEVEL SPREADER SHOULD BE CHECKED PERIODICALLY AND AFTER EVERY MAJOR STORM TO DETERMINE IF THE LIP HAS BEEN DAMAGED AND THE DESIGN CONDITIONS HAVE NOT CHANGED. ANY DETRIMENTAL SEDIMENT ACCUMULATION SHOULD BE REMOVED. IF RILLING HAS TAKEN PLACE ON THE LIP, THEN THE DAMAGE SHOULD BE REPAIRED AND REVEGETATED. THE VEGETATION SHOULD BE MOWED OCCASIONALLY TO CONTROL WEEDS AND THE ENCROACHMENT OF WOODY VEGETATION. CLIPPINGS SHOULD BE REMOVED AND DISPOSED OF OUTSIDE THE SPREADER AND AWAY FROM OUTLET AREA. FERTILIZATION SHOULD BE DONE AS NECESSARY TO KEEP THE VEGETATION HEALTHY AND DENSE.

E13

PIPE OUTLET PROTECTION

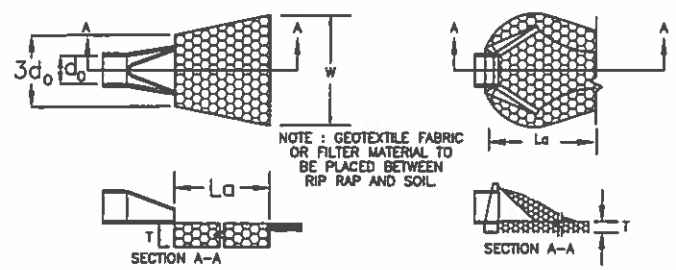

PIPE OUTLET PROTECTION CONSTRUCTION SPECIFICATIONS

1. THE SUB GRADE FOR THE FILTER MATERIAL, GEOTEXTILE FABRIC, AND RIP RAP SHALL BE PREPARED TO THE LINES AND GRADES SHOWN ON THE PLANS. SPECIFIED GRADATION.
2. THE ROCK OR GRAVEL USED FOR FILTER OF RIP RAP SHALL CONFORM TO NHDOT SECTION 583.
3. GEOTEXTILE FABRICS SHALL BE PROTECTED FROM PUNCTURE OR TEARING DURING THE PLACEMENT OF THE ROCK RIP RAP DAMAGED AREAS IN THE FABRIC SHALL BE REPAIRED BY PLACING A PIECE OF FABRIC OVER THE DAMAGED AREA OR BY COMPLETE REPLACEMENT OF THE FABRIC. ALL OVERLAPS REQUIRED FOR REPAIRS OR JOINING TWO PIECES OF FABRIC SHALL BE A MINIMUM OF 12 INCHES.
4. STONE FOR THE RIP RAP MAY BE PLACED BY EQUIPMENT AND SHALL BE CONSTRUCTED TO THE FULL LAYER THICKNESS IN ONE OPERATION AND IN SUCH A MANNER AS TO PREVENT SEGREGATION OF THE STONE SIZES.

E14

TABLE 7-24---RECOMMENDED RIP RAP GRADATION RANGES

d50 SIZE= 0.5 FEET 6 INCHES		
% OF WEIGHT SMALLER THAN THE GIVEN d50 SIZE	SIZE OF STONE (INCHES) FROM	TO
100%	9	12
85%	8	11
50%	6	9
15%	2	3

TABLE 7-24---RECOMMENDED RIP RAP GRADATION RANGES

d50 SIZE= 1.0 FEET 12 INCHES		
% OF WEIGHT SMALLER THAN THE GIVEN d50 SIZE	SIZE OF STONE (INCHES) FROM	TO
100%	18	24
85%	16	22
50%	12	18
15%	4	6

E15

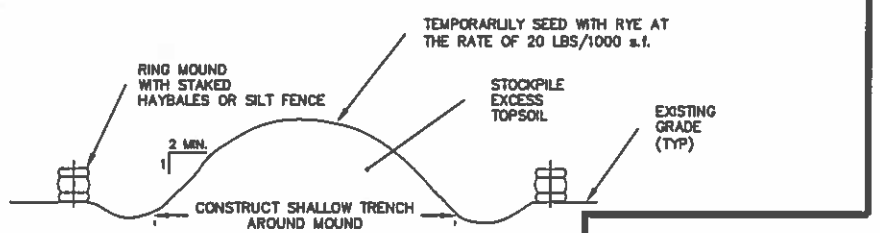

TOPSOIL STOCKPILE MOUND

NOT TO SCALE

E16

NOTE: THIS PROJECT IS TO BE MANAGED IN A MANNER THAT MEETS THE REQUIREMENTS AND INTENT OF RSA 430:53 AND CHAPTER AGR 3800 RELATIVE TO INVASIVE SPECIES.

NOTE: Temporary seed mix for stabilization of turf shall be winter rye or oats at a rate of 2.5 lbs. per 1000 s.f. and shall be placed prior to OCT. 15, if permanent seeding not yet complete.

SEEDING GUIDE

USE	SEEDING MIXTURE 1/	DROUGHTY	WELL DRAINED	MODERATELY WELL DRAINED	POORLY DRAINED
STEEP CUTS AND FILLS, BORROW AND DISPOSAL AREAS	A	FAIR	GOOD	GOOD	FAIR
	B	POOR	GOOD	FAIR	FAIR
	C	POOR	GOOD	GOOD	EXCELLENT
	D	FAIR	EXCELLENT	EXCELLENT	POOR
	E	FAIR	EXCELLENT	EXCELLENT	POOR
WATERWAYS, EMBANKMENT SPILLWAYS, AND OTHER CHANNELS WITH FLOWING WATER.	A	GOOD	GOOD	GOOD	FAIR
	B	GOOD	EXCELLENT	EXCELLENT	FAIR
	D	GOOD	EXCELLENT	EXCELLENT	FAIR
LIGHTLY USED PARKING LOTS, USED AREAS, UNUSED LANDS, AND LOW INTENSITY USE RECREATION SITES.	A	GOOD	GOOD	GOOD	FAIR
	B	GOOD	GOOD	GOOD	FAIR
	C	GOOD	EXCELLENT	EXCELLENT	FAIR
	D	FAIR	GOOD	GOOD	EXCELLENT
PLAY AREAS AND ATHLETIC FIELDS (TURFGRASS, IN GENERAL, FOR GOOD TURF.)	F	FAIR	EXCELLENT	EXCELLENT	2/
	G	FAIR	EXCELLENT	EXCELLENT	2/

GRAVEL PIT, SEE NH-PA-34 IN APPENDIX FOR RECOMMENDATION REGARDING RECLAMATION OF SAND AND GRAVEL PITS.

1/ REFER TO SEEDING MIXTURES AND RATES IN TABLE 7-25.
2/ POORLY DRAINED SOILS ARE NOT DESIRABLE FOR USE AS PLAYING AREA AND ATHLETIC FIELDS.

RECOMMENDED *

SEEDING RATES

MIXTURE	POUNDS PER ACRE	POUNDS PER 1,000 SQ. FT.
A. TALL FESCUE	50	0.40
CREEPING RED FESCUE	15	0.35
RED TOP	2	0.05
TOTAL	67	0.80
B. TALL FESCUE	10	0.30
CREEPING RED FESCUE	10	0.25
GROWN VETCH	10	0.25
OR	OR	OR
FLAT PEA	50	0.75
TOTAL	70 OR 50	0.80 OR 1.30
C. TALL FESCUE	51	0.35
CREEPING RED FESCUE	34	0.25
GRASS FOOT TREFOIL	15	0.10
TOTAL	100	0.70
D. TALL FESCUE	50	0.40
FLAT PEA	50	0.75
TOTAL	100	1.15
E. CREEPING RED FESCUE 4/	50	1.10
HERBACEOUS BLUEGRASS 3/	50	1.25
TOTAL	100	2.35
F. TALL FESCUE 1	100	3.00

CONSERVATION MIX	POUNDS PER ACRE	POUNDS PER 1,000 S.F.
RED FESCUE (35%)	75	1.75
TALL FESCUE (25%)	55	1.25
ANNUAL RYEGRASS (12%)	33	0.75
PERENNIAL RYEGRASS (10%)	26	0.60
KENTUCKY BLUEGRASS (10%)	22	0.50
WHITE CLOVER (3%)	7	0.15

1. GRADING AND SHAPING
   A. SLOPES SHALL NOT BE STEEPER THAN 2:1;3:1 SLOPES OR FLATTER ARE PREFERRED. WHERE MOWING WILL BE DONE, 3:1 SLOPES OR FLATTER ARE RECOMMENDED.
2. SEEDBED PREPARATION
   A. SURFACE AND SEEPAGE WATER SHOULD BE DRAINED OR DIVERTED FROM THE SITE TO PREVENT DROWNING OR WINTER KILLING OF THE PLANTS.
   B. STONES LARGER THAN 4 INCHES AND TRASH SHOULD BE REMOVED BECAUSE THEY INTERFERE WITH SEEDING AND FUTURE MAINTENANCE OF THE AREA. WHERE FEASIBLE, THE SOIL SHOULD BE TILLED TO A DEPTH OF ABOUT 4 INCHES TO PREPARE A SEED BED AND MIX FERTILIZER AND LIME INTO THE SOIL. THE SEEDBED SHOULD BE LEFT IN REASONABLY FIRM AND SMOOTH CONDITION. THE LAST TILLAGE OPERATION SHOULD BE PERFORMED ACROSS THE SLOPE WHEREVER PRACTICAL.
3. ESTABLISHING A STAND
   A. LIME AND FERTILIZER SHOULD BE APPLIED PRIOR TO OR AT THE TIME OF SEEDING AND INCORPORATED INTO THE SOIL KINDS AND AMOUNTS OF LIME AND FERTILIZER SHOULD BE BASED ON AN EVALUATION OF SOIL TESTS. WHEN A SOIL TEST IS NOT AVAILABLE, THE FOLLOWING MINIMUM AMOUNTS SHOULD BE APPLIED:
   AGRICULTURAL LIMESTONE, 2 TONS PER ACRE OR 100LBS. PER 1,000 SQ.FT.
   NITROGEN(N), 50LBS. PER ACRE OR 1.1LBS. PER 1,000 SQ.FT.
   PHOSPHATE(P2O5), 100LBS. PER ACRE OR 2.2LBS. PER 1,000 SQ.FT.
   POTASH(K2O), 100LBS. PER ACRE OR 2.2LBS. PER 1,000 SQ.FT.
   (NOTE: THIS IS THE EQUIVALENT OF 500LBS. PER ACRE OF 10-20-20 FERTILIZER OR 1,000LBS. PER ACRE OF 5-10-10.)
   B. SEED SHOULD BE SPREAD UNIFORMLY BY THE METHOD MOST APPROPRIATE FOR THE SITE. METHODS INCLUDE BROADCASTING, DRILLING AND HYDROSEEDING. WHERE BROADCASTING IS USED, COVER SEED WITH .25 INCH OF SOIL OR LESS, BY CULTIPACKING OR RAKING.
   C. REFER TO TABLE(G-E1 THIS SHEET) FOR APPROPRIATE SEED MIXTURES AND TABLE(H-E1 THIS SHEET) FOR RATES OF SEEDING. ALL LEGUMES (CROWNVETCH, BIRDSFOOT TREFOIL, AND FLATPEA) MUST BE INOCULATED WITH THEIR SPECIFIC INOCULANT.
   D. WHEN SEEDED AREAS ARE MULCHED, PLANTINGS MAY BE MADE FROM EARLY SPRING TO EARLY OCTOBER. WHEN SEEDED AREAS ARE NOT MULCHED, PLANTINGS SHOULD BE MADE FROM EARLY SPRING TO MAY 20 OR FROM AUGUST 10 TO SEPTEMBER 1.
4. MULCH
   A. HAY, STRAW, OR OTHER MULCH, WHEN NEEDED, SHOULD BE APPLIED IMMEDIATELY AFTER SEEDING.
   B. MULCH WILL BE HELD IN PLACE USING APPROPRIATE TECHNIQUES FROM THE BEST MANAGEMENT PRACTICE FOR MULCHING. HAY OR STRAW MULCH SHALL BE PLACED AT A RATE OF 90LBS PER 1000 S.F.
5. MAINTENANCE TO ESTABLISH A STAND
   A. PLANTED AREA SHOULD BE PROTECTED FROM DAMAGE BY FIRE, GRAZING, TRAFFIC, AND DENSE WEED GROWTH.
   B. FERTILIZATION NEEDS SHOULD BE DETERMINED BY ONSITE INSPECTIONS. SUPPLEMENTAL FERTILIZER IS USUALLY THE KEY TO FULLY COMPLETE THE ESTABLISHMENT OF THE STAND BECAUSE MOST PERENNIAL STAKE 2 TO 3 YEARS TO BECOME ESTABLISHED.
   C. IN WATERWAYS, CHANNELS, OR SWALES WHERE UNIFORM FLOW CONDITIONS ARE ANTICIPATED, OCCASIONAL MOWING MAY BE NECESSARY TO CONTROL GROWTH OF WOODY VEGETATION.

SEEDING SPECIFICATIONS

E17

WINTER STABILIZATION NOTES

1. ALL DISTURBED AREAS THAT DO NOT HAVE AT LEAST 85% VEGETATIVE COVERAGE PRIOR TO OCTOBER 15TH, SHALL BE STABILIZED BY APPLYING MULCH AT A RATE OF 3-4 TONS PER ACRE. ALL SIDE SLOPES, STEEPER THAN 4:1, THAT ARE NOT DIRECTED TO SWALES OR DETENTION BASINS, SHALL BE LINED WITH BIODEGRADABLE/PHOTODEGRADABLE "JUTE MATTING" (EXCELSIOR'S CURLEX II OR EQUAL). ALL OTHER SLOPES SHALL BE MULCHED AND TACKED AT A RATE OF 3-4 TONS PER ACRE. THE APPLICATION OF MULCH AND/OR JUTE MATTING SHALL NOT OCCUR OVER EXISTING SNOW COVER. IF THE SITE IS ACTIVE AFTER NOVEMBER 15TH, ANY SNOW THAT ACCUMULATES ON DISTURBED AREAS SHALL BE REMOVED. PRIOR TO SPRING THAW ALL AREAS WILL BE STABILIZED, AS DIRECTED ABOVE.

2. ALL SWALES THAT DO NOT HAVE FULLY ESTABLISHED VEGETATION SHALL BE EITHER LINED WITH TEMPORARY JUTE MATTING OR TEMPORARY STONE CHECK DAMS (APPROPRIATELY SPACED). STONE CHECK DAMS WILL BE MAINTAINED THROUGHOUT THE WINTER MONTHS. IF THE SWALES ARE TO BE MATTED WITH PERMANENT LINERS OR RIPRAP WITH ENGINEERING FABRIC, THIS SHALL BE COMPLETED PRIOR TO WINTER SHUTDOWN OR AS SOON AS THEY ARE PROPERLY GRADED AND SHAPED.

3. PRIOR TO NOV. 15TH ALL ROADWAY AND PARKING AREAS SHALL BE BROUGHT UP TO AND THROUGH THE BANK RUN GRAVEL APPLICATION. IF THESE AREAS' ELEVATIONS ARE PROPOSED TO REMAIN BELOW THE PROPOSED SUBGRADE ELEVATION, THE SUBGRADE MATERIAL SHALL BE ROUGHLY CROWNED AND A 3" LAYER OF CRUSHED GRAVEL SHALL BE PLACED AND COMPACTED. THIS WILL ALLOW THE SUBGRADE TO SHED RUNOFF AND WILL REDUCE ROADWAY EROSION. THIS CRUSHED GRAVEL DOES NOT HAVE TO CONFORM TO NH DOT 304.3, BUT SHALL HAVE BETWEEN 15-25% PASSING THE #200 SIEVE AND THE LARGEST STONE SIZE SHALL BE 2". IF THE SITE IS ACTIVE AFTER NOVEMBER 15TH, ANY ACCUMULATED SNOW SHALL BE REMOVED FROM ALL ROADWAY AND PARKING AREAS.

4. AFTER OCTOBER 15TH, THE END OF NEW HAMPSHIRE'S AVERAGE GROWING SEASON, NO ADDITIONAL LOAM SHALL BE SPREAD ON SIDE SLOPES AND SWALES. THE STOCKPILES THAT WILL BE LEFT UNDISTURBED UNTIL SPRING SHALL BE SEEDED BY THIS DATE. AFTER OCTOBER 15TH, ANY NEW OR DISTURBED PILES SHALL BE MULCHED AT A RATE OF 3-4 TONS PER ACRE. ALL STOCKPILES THAT WILL REMAIN THROUGHOUT THE WINTER SHALL BE SURROUNDED WITH SILT FENCING.

E18

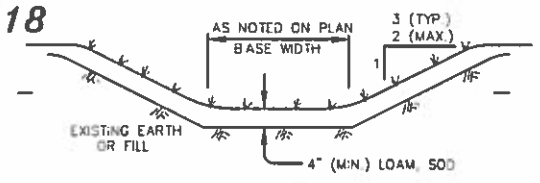

GRASS TREATMENT SWALE

NOT TO SCALE

INSPECT ANNUALLY FOR EROSION, SEDIMENT ACCUMULATIONS, VEGETATION LOSS, & INVASIVE SPECIES. REPAIR AS NECESSARY.

MOW GRASS ANNUALLY TO A DEPTH OF 4".

INSTALL STABILIZATION MATTING DURING CONSTRUCATION

E22

DEFINITION OF STABLE:

1. WHEN A BASE COURSE GRAVEL HAS BEEN INSTALLED IN AN AREA TO BE PAVED
2. WHEN A MINIMUM OF 85% VEGITATIVE GROWTH OCCURS
3. WHEN A MINIMUM OF 3" OF NON-EROSIVE MATERIAL, SUCH AS STONE OR RIP-RAP HAS BEEN INSTALLED.
4. WHEN PROPER EROSION CONTROL BLANKETS, SUCH AS CURLEX II, C350 OR OTHER DOT APPROVED MATTING, HAS BEEN INSTALLED PROPERLY
5. HAY MULCH OR OTHER APPROVED METHODS SHALL BE USED TO CONTROL EROSION OF NEWLY GRADED AREAS. ALL CUT AND FILL SLOPES SHALL BE SEEDED AND MULCHED WITHIN 72 HOURS AFTER THEIR CONSTRUCTION.

E19

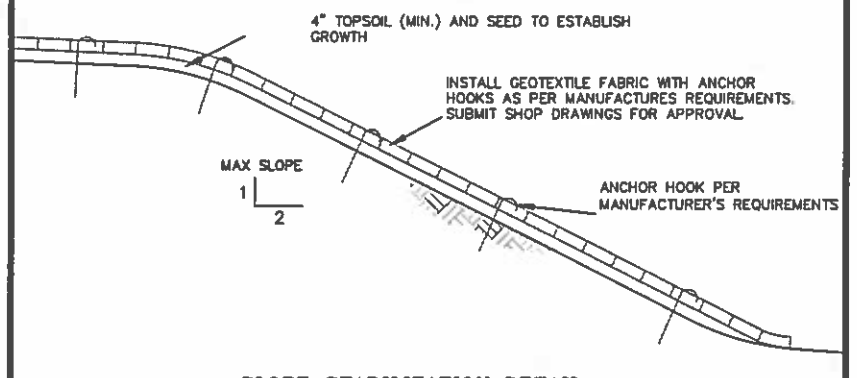

SLOPE STABILIZATION DETAIL

NOT TO SCALE

E20

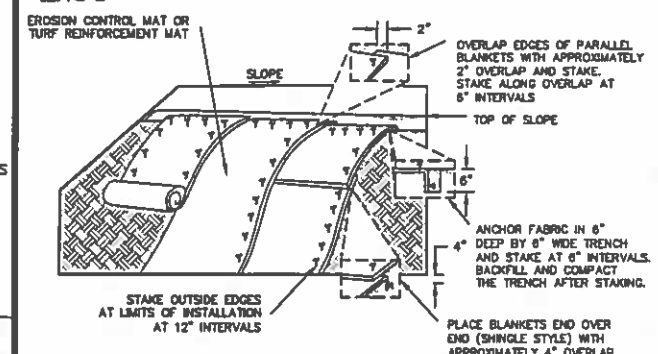

NOTE : STAKING PATTERNS SHALL FOLLOW MANUFACTURERS RECOMMENDATIONS.
MINIMUM SPACING 3' - 0" O.C. ACROSS FABRIC.

INSTALLATION OF EROSION CONTROL FABRICS

NOT TO SCALE

E21

CONSTRUCTION SEQUENCE:

1.) CUT AND REMOVE TREES IN CONSTRUCTION AREA ONLY AS REQUIRED
2.) CONSTRUCT AND/OR INSTALL TEMPORARY AND PERMANENT SEDIMENT EROSION AND DETENTION CONTROL FACILITIES AS
3.) EROSION, SEDIMENT AND DETENTION CONTROL FACILITY SHALL BE INSTALLED & STABILIZED PRIOR TO ANY EARTH MOVING OPERATION & OR DIRECTING RUNOFF TO THEM.
4.) CLEAR, CUT AND DISPOSE OF DEBRIS IN APPROVED FACILITY
5.) CONSTRUCT TEMPORARY CULVERTS AS REQUIRED, OR DIRECTED
6.) CONSTRUCT ROADWAYS FOR ACCESS TO DESIRED CONSTRUCTION AREAS. ALL ROADS SHALL BE STABILIZED IMMEDIATELY
7.) INSTALL PIPE AND CONSTRUCTION ASSOCIATED APPURTENANCES AS REQUIRED OR DIRECTED. INSTALL RAIN GARDENS. ALL DISTURBED AREAS SHALL STABILIZED IMMEDIATELY AFTER GRADING.
8.) BEGIN PERMANENT AND TEMPORARY SEEDING AND MULCHING. ALL CUT AND FILL SLOPES AND DISTURBED AREAS SHALL BE SEEDED OR MULCHED AS REQUIRED, OR DIRECTED. NO AREA IS ALLOWED TO BE DISTURBED FOR A LENGTH OF TIME THAT EXCEEDS 60 DAYS BEFORE BEING STABILIZED. DAILY, OR AS REQUIRED. ALL ROADWAYS AND PARKING AREAS SHALL BE STABILIZED WITHIN 72 HOURS OF ACHIEVING FINISHED GRADES. ALL CUT AND FILL SLOPES SHALL BEW STABILIZED WITHIN 72 HOURS OF ACHIEVING FINISHED GRADES.
9.) CONSTRUCT TEMPORARY BERMS, DRAINS DITCHES, SILT FENCES, SEDIMENT TRAPS, ETC. MULCH AND SEED AS REQUIRED.
10.) INSPECT AND MAINTAIN ALL EROSION AND SEDIMENT CONTROL MEASURES DURING CONSTRUCTION
11.) COMPLETE PERMANENT SEEDING AND LANDSCAPING.
12.) REMOVE TEMPORARY EROSION CONTROL MEASURES AFTER SEEDING AREAS HAVE ESTABLISHED THEMSELVES AND SITE IMPROVEMENTS ARE COMPLETE.
13.) SMOOTH AND REVEGETATE ALL DISTURBED AREAS.
14.) FINISH PAVING ALL ROADWAYS

E-102

ROCHESTER PLANNING FILE: 216-29-GRD-2015

REVISION	DATE	DESCRIPTION
#3	5-22-15	PER NHDOT AND CONDITIONS OF APPROVAL
#4	7-17-15	PRE-CONSTRUCTION TECHNICAL REVISIONS
#5	4-08-19	POST-APPLICATION TECHNICAL REVISIONS

SEDIMENT AND EROSION CONTROL DETAILS
LAND OF
21 FARMINGTON ROAD LLC
21 FARMINGTON ROAD, ROUTE 11
ROCHESTER, NH 03867
TAX MAP 216, LOT 29

BERRY SURVEYING & ENGINEERING
335 SECOND CROWN POINT ROAD
BARRINGTON, NH 03825 (332-2863)

SCALE : AS MARKED
DATE : MARCH 30, 2015
FILE NO. : DB 2014-149

STATE OF NEW HAMPSHIRE — KENNETH A. BERRY No. 14243 — LICENSED PROFESSIONAL ENGINEER

D1

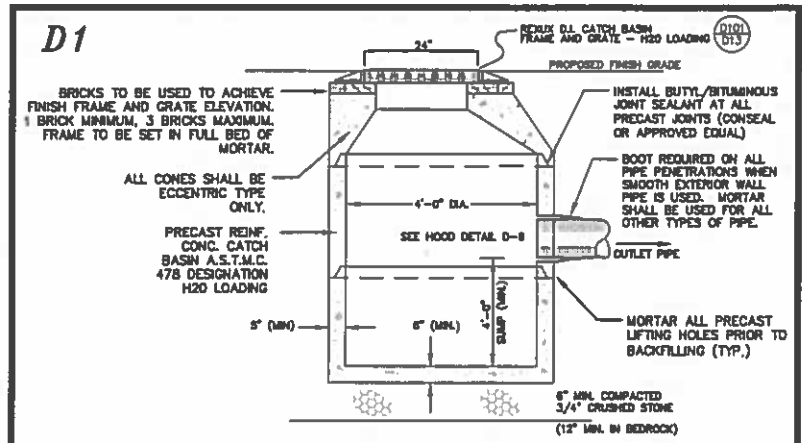

CATCH BASIN DETAIL

NOT TO SCALE

D2

CATCH BASIN FRAME AND GRATE WILL BE REXUS, OF APPROVED EQUAL, 24 INCH OPENING, DUCTILE IRON, H20 LOADING.

CATCH BASIN GRATE DETAILS

NOT TO SCALE

D8

UNDERDRAIN TRENCH DETAIL

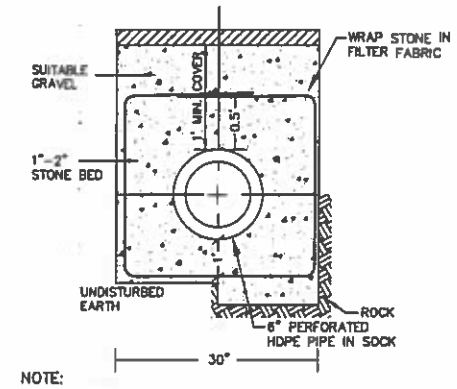

NOTE:
1. PAVEMENT REPAIR IN EXISTING ROADWAYS SHALL CONFORM TO STREET OPENING REGULATIONS.
2. NEW ROADWAY CONSTRUCTION SHALL CONFORM TO SUBDIVISION SPECS.

D9

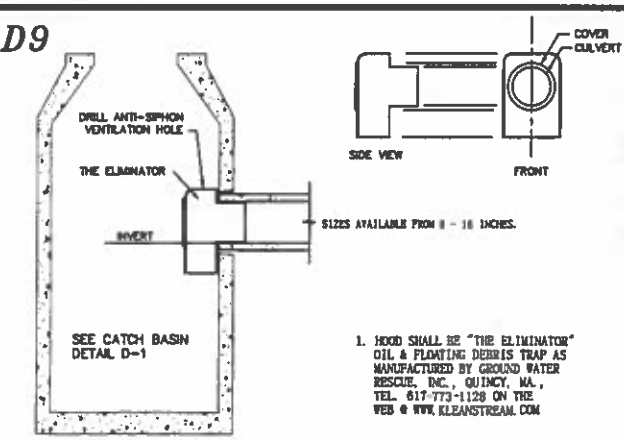

1. HOOD SHALL BE "THE ELIMINATOR" OIL & FLOATING DEBRIS TRAP AS MANUFACTURED BY GROUND WATER RESCUE, INC., QUINCY, MA., TEL. 617-773-1128 ON THE WEB @ WWW.KLEANSTREAM.COM

CATCH BASIN HOOD DETAIL

NOT TO SCALE

D3

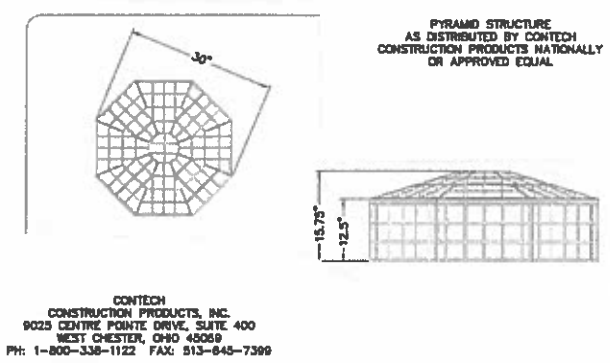

PYRAMID TRASH RACK DETAIL

NOT TO SCALE

D4

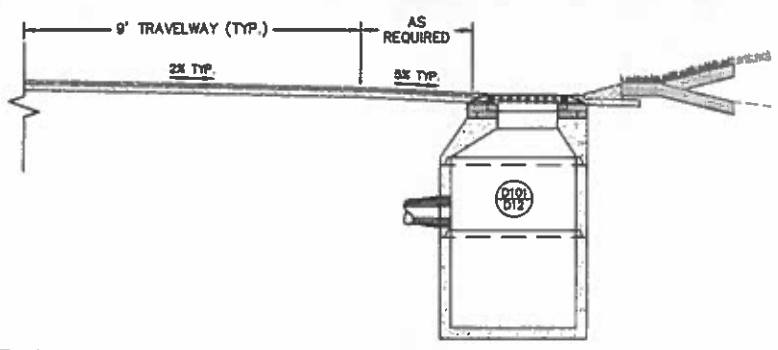

DETAIL FOR DRAINAGE STRUCTURES NOT LOCATED AT EDGE OF TRAVEL WAY

NOT TO SCALE

D10

2' DIAMETER DROP INLET BASIN

NOT TO SCALE

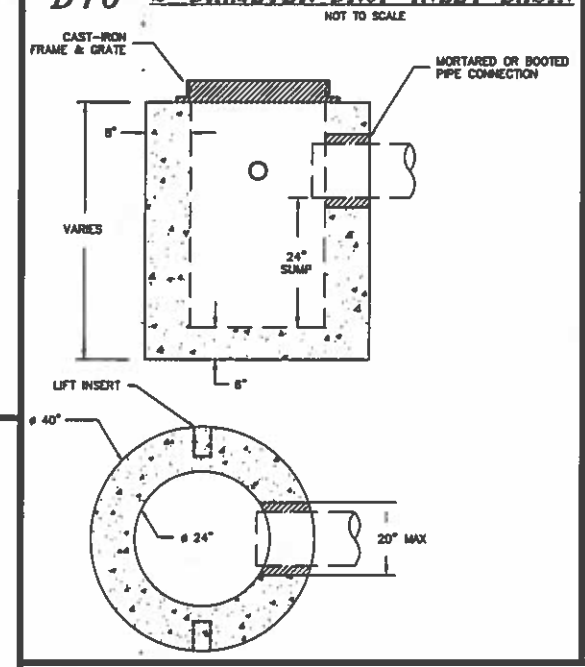

D11

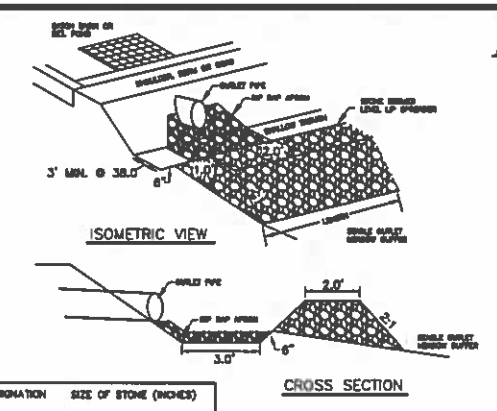

SIEVE DESIGNATION	SIZE OF STONE (INCHES)
100%	12
84-100%	8
68-83%	3
43-53%	1
8-12%	NO. 4

1. CONSTRUCT THE LEVEL SPREADER LIP ON A 0% GRADE TO INSURE UNIFORM SPREADING OF RUNOFF.
2. LEVEL SPREADER SHALL BE CONSTRUCTED ON UNDISTURBED SOIL AND NOT ON FILL.
3. THE ENTIRE LEVEL LIP AREA SHALL BE PROTECTED BY PLACING EXCELSIOR ENFORCER MATTING BENEATH THE STONE. EACH STRIP SHALL OVERLAP BY AT LEAST SIX INCHES.
4. THE FLOW FROM THE LEVEL SPREADER SHALL OUTLET ONTO STABILIZED AREAS. WATER SHOULD NOT RE-CONCENTRADE IMMEDIATELY BELOW THE SPREADER.
5. MAINTENANCE: THE LEVEL SPREADER SHOULD BE CHECKED PERIODICALLY AND AFTER EVERY MAJOR STORM TO DETERMINE IF THE LIP HAS BEEN DAMAGED AND THE DESIGN CONDITIONS HAVE NOT CHANGED. ANY DETRIMENTAL SEDIMENT ACCUMULATION SHOULD BE REMOVED. IF STONE REMOVAL HAS TAKEN PLACE ON THE LIP, THEN THE DAMAGE SHOULD BE REPAIRED.

STONE BERM LEVEL SPREADER

NOT TO SCALE

D5

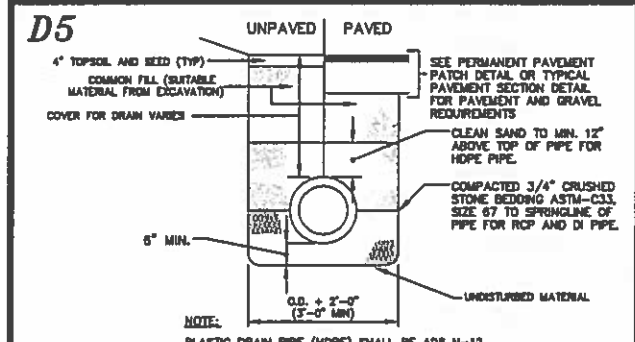

NOTE:
PLASTIC DRAIN PIPE (HDPE) SHALL BE AD3 N-12 (CORRUGATED EXTERIOR/SMOOTH INTERIOR) OR EQUAL MEETING AASHTO M-252 AND H-20 LOADING.

DI DRAIN PIPE SHALL BE CL. 50.

RC DRAIN PIPE SHALL BE CLASS III UNLESS OTHERWISE NOTED.

TYPICAL DRAIN AND SEWER PIPE TRENCH

NOT TO SCALE

D6

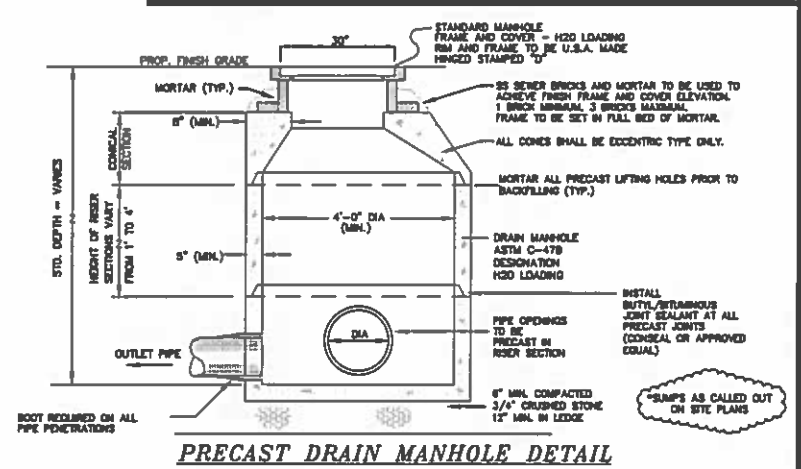

PRECAST DRAIN MANHOLE DETAIL

NOT TO SCALE

D7

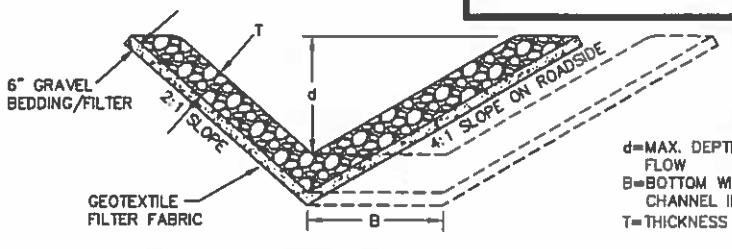

d=MAX. DEPTH OF FLOW FLOW
B=BOTTOM WIDTH OF CHANNEL IF SPECIFIED
T=THICKNESS OF STONE

TYPICAL SECTION FOR A RIPRAP LINED CHANNEL

NOT TO SCALE

DIAMETER	12"	15"	18"	24"	30"
LENGTH	3'-6"	4'-6"	5'-6"	7'-6"	9'-6"
CONC. (Cu.Yd.)	0.65	0.91	1.22	1.95	2.86
STEEL (Lbs.)	9	11	14	20	25

ALL STEEL SHALL BE #5 REINFORCING STEEL, SPACED @ 12" ON CENTER

D12

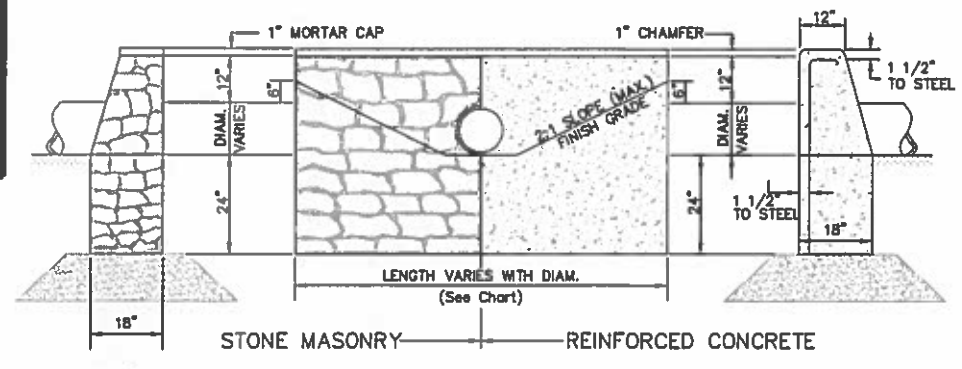

HEADWALLS (MASONRY & CONCRETE)

NOT TO SCALE

REFERENCE IS MADE TO A LONG TERM MAINTENANCE MANUAL PREPARED BY BERRY SURVEYING & ENGINEERING, WHICH IS ON FILE AT THE CITY OF ROCHESTER PLANNING DEPARTMENT, AND CAN BE FOUND AT THE OFFICE OF BERRY SURVEYING & ENGINEERING. (603) 332-2863

D-101

ROCHESTER PLANNING FILE: 216-29-GRD-2015

REVISION	DATE	DESCRIPTION
#4	1-13-16	PER NHDOT ACCESS PERMIT & FINAL REVIEW
#5	5-23-15	PER N.D.D. AND CONDITIONS OF APPROVAL
#6	4-28-15	PER ROCHESTER TRC REVIEW
		POST-APPLICATION TECHNICAL REVISIONS

DRAINAGE DETAILS
LAND OF
21 FARMINGTON ROAD LLC
21 FARMINGTON ROAD, ROUTE 11
ROCHESTER, NH 03867
TAX MAP 216, LOT 29

BERRY SURVEYING & ENGINEERING
335 SECOND CROWN POINT ROAD
BARRINGTON, NH 03825 (332-2863)

SCALE : AS MARKED
DATE : MARCH 30, 2015
FILE NO. : DB 2014-149

STATE OF NEW HAMPSHIRE
KENNETH A. BERRY
No. 14243
LICENSED
PROFESSIONAL ENGINEER

SHEET 13 OF 20

C1

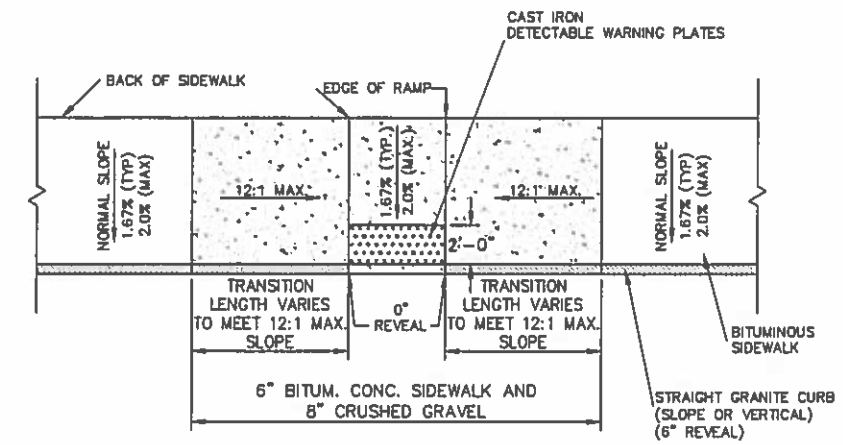

PLAN
(NOT TO SCALE)

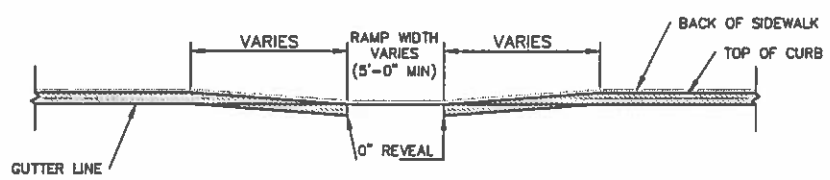

ELEVATION
(NOT TO SCALE)

TYPICAL DETAIL FOR WHEELCHAIR RAMP
(NOT TO SCALE)

C2

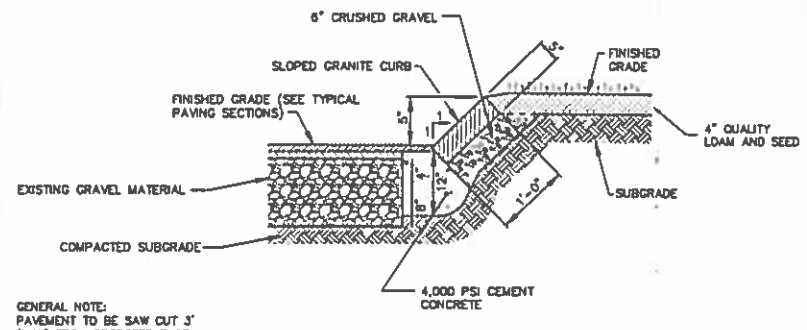

SLOPE GRANITE CURB DETAIL
NOT TO SCALE

C3

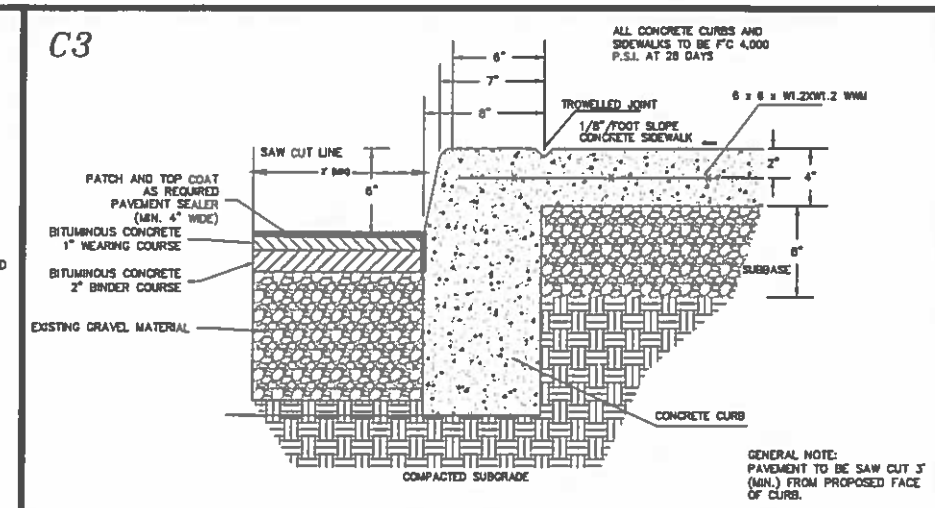

CURB DETAIL WITH MONOLITHIC SIDEWALK
NOT TO SCALE

C5

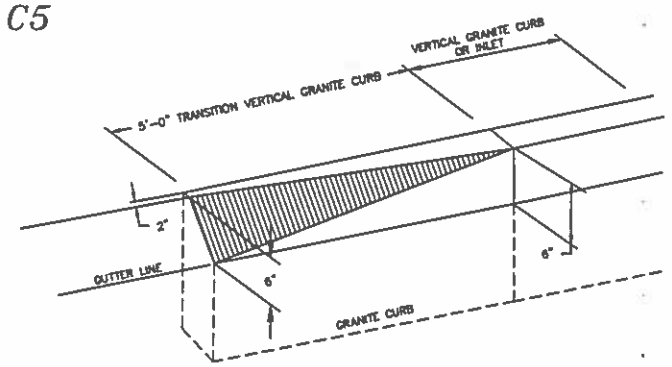

CURB TRANSITION DETAIL
NOT TO SCALE

TO BE USED FOR TRANSITION FROM VERTICAL GRANITE CURB TO SLOPED GRANITE CURB

C6

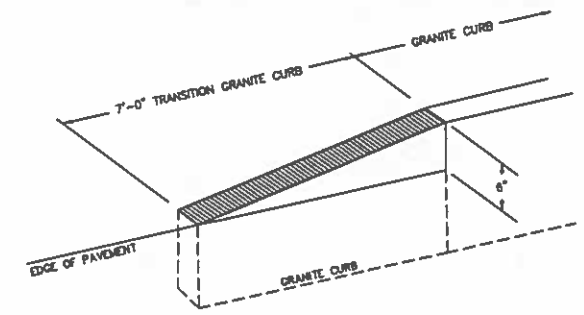

CURB TRANSITION DETAIL
NOT TO SCALE

TO BE USED FOR TRANSITION FROM GRANITE CURB TO EDGE OF PAVEMENT

C7

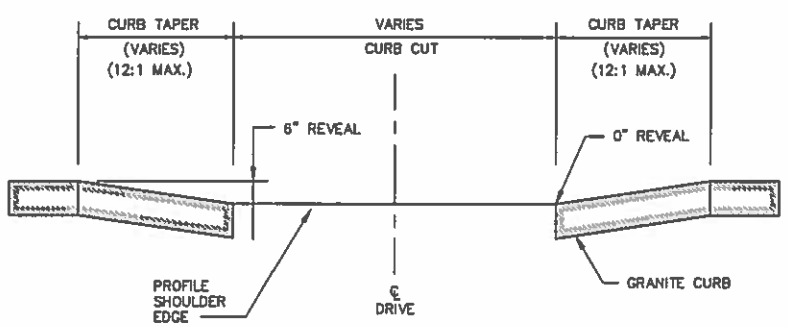

END VIEW
(NOT TO SCALE)

DETAILS FOR SIDEWALK RAMPS
(NOT TO SCALE)

C8

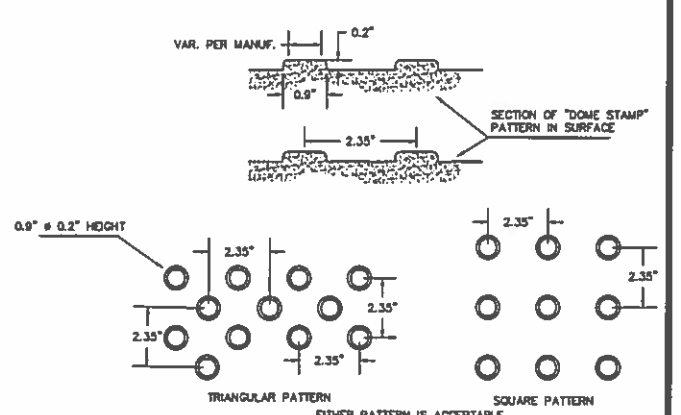

DETECTABLE WARNING SURFACE
NOT TO SCALE

C9

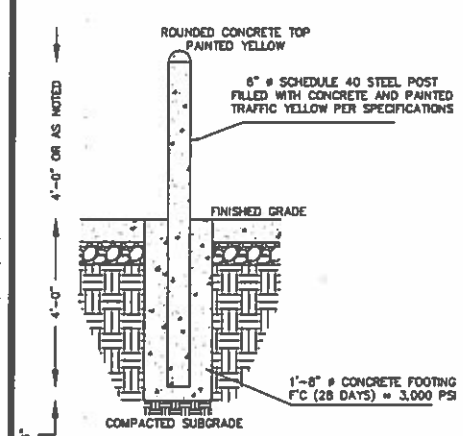

BOLLARD DETAIL
NOT TO SCALE

C10

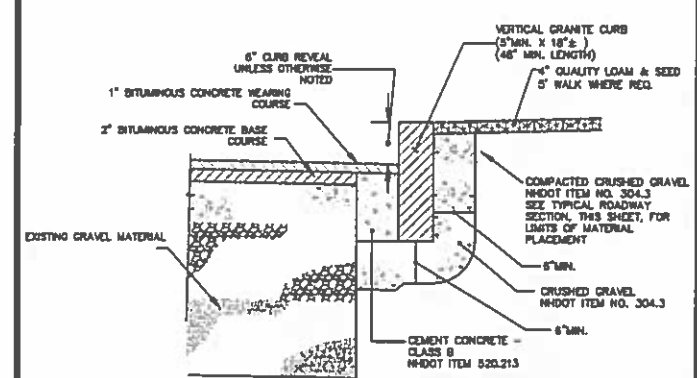

VERTICAL GRANITE CURB DETAIL
NOT TO SCALE

GENERAL NOTE:

1.) TO BE USED IN PLACE OF THE CONCRETE WALK AND INTEGRATED CURB AT THE OWNERS DISCRETION

C-101

ROCHESTER PLANNING FILE: 216-29-GRD-2015

REVISION	DATE	DESCRIPTION
#3	5-22-15	PER N.O.D. AND CONDITIONS OF APPROVAL
#2	5-21-15	PER PROJECT REVIEW
#1	4-06-15	POST-APPLICATION TECHNICAL REVISIONS

CONSTRUCTION DETAILS
LAND OF
21 FARMINGTON ROAD LLC
21 FARMINGTON ROAD, ROUTE 11
ROCHESTER, NH 03867
TAX MAP 216, LOT 29

BERRY SURVEYING & ENGINEERING
335 SECOND CROWN POINT ROAD
BARRINGTON, NH 03825 (332-2863)

SCALE : AS MARKED
DATE : MARCH 30, 2015
FILE NO : DB 2014-149

STATE OF NEW HAMPSHIRE
KENNETH A. BERRY
No. 14243
LICENSED
PROFESSIONAL ENGINEER

C11

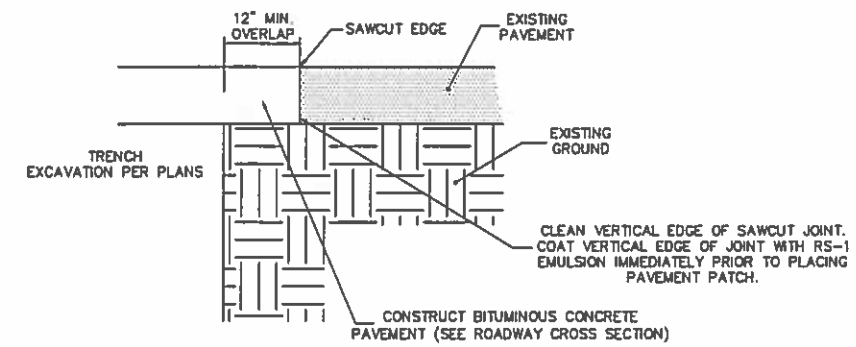

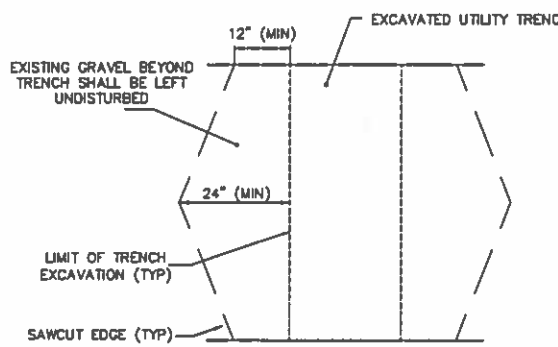

PLAN

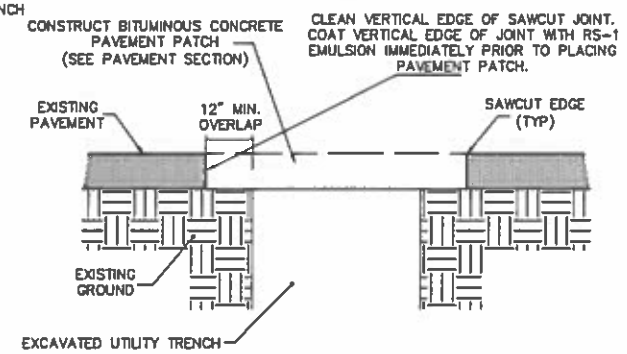

SECTION

NOTES
1. MACHINE CUT EXISTING PAVEMENT.
2. ALL TEMPORARY, DAMAGED, OR DEFECTIVE PAVEMENT SHALL BE REMOVED PRIOR TO PLACEMENT OF PERMANENT TRENCH REPAIRS.
3. DIAMOND PATCHES, SHALL BE REQUIRED FOR ALL TRENCHES CROSSING ROADWAY. DIAMOND PATCHES SHALL MEET NHDOT REQUIREMENTS.

TYPICAL TRENCH PATCH
NOT TO SCALE

C12

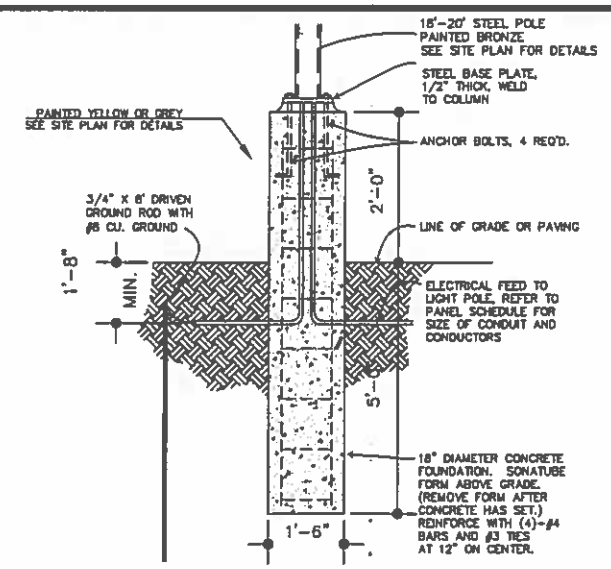

POLE FOUNDATION

PARKING LOT LIGHT BASE DETAIL
SCALE: NONE

C13

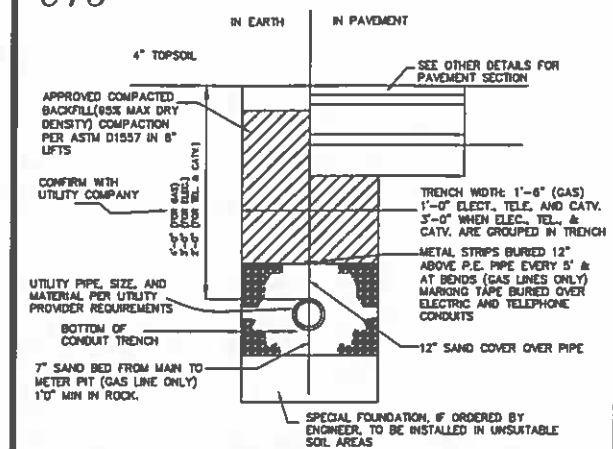

ELECTRICAL, TELEPHONE, AND GAS TRENCH
NOT TO SCALE

PARKING SPACE DETAIL
NOT TO SCALE

C14

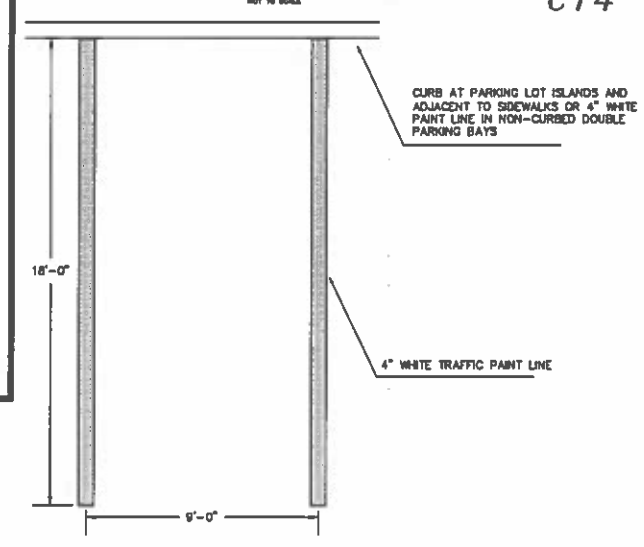

NOTES:
1.) PROVIDE TWO COATS OF PAINT ON ALL PARKING LINES.
2.) SEE PROPOSED SITE PLANS FOR LOCATION OF PARKING SPACES.
3.) PAINTED SPACES ONLY WHERE MARKED ON SITE PLAN

C19

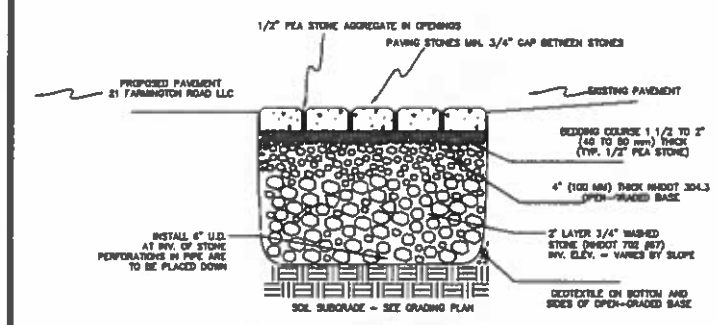

PERVIOUS PAVING STONE DETAIL

NOTES:
1.) PAVING STONE INFILTRATION AREA IS TO MATCH THE BIORETENTION DRY-SWALE CONSTRUCTION ADJACENT ON BOTH ENDS.

C15

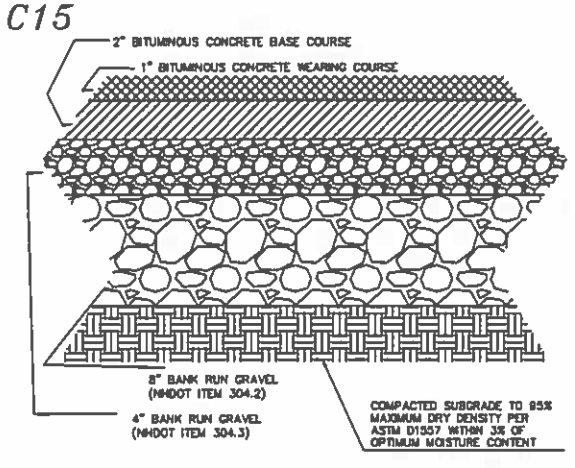

NOTES:

1.) BITUMINOUS MATERIALS SHALL CONFORM TO NHDOT SPECIFICATION SUBSECTION 401.3.6.

2.) PAVEMENT BASE COURSE AGGEGATE SHALL CONFORM TO NHDOT SPECIFICATION SECTION 304, ITEM 304.3 AND COMPACTED TO A MINIMUM OF 95% OF MODIFIED PROCTOR MAXIMUM DRY DENSITY.

3.) PAVEMENT SUBBASE COURSE AGGREGATE AND AGGREGATE FOR SUBGRADE REPAIR AREAS SHALL BE SUITABLE FOR USE AS STRUCTURAL FILL AND BE PROOFROLLED AND COMPABED TO 95% OF MODIFIED PROCTOR MAXIMUM DRY DENSITY. FOR NEW CONSTRUCTION AREAS ONLY. IN EXISTING PAVEMENT AREAS THE CONTRACTOR IS TO ENSURE THE BASE MATERIAL IS SUITABLE TO THE OWNER FOR RE-PAVING

NOT TO SCALE

BITUMINOUS CONCRETE PAVEMENT SECTION

C16

NOTES:

1.) POLE MOUNTED LAMPS. SEE LIGHTING AND SITE PLANS FOR FURTHER DETAILS

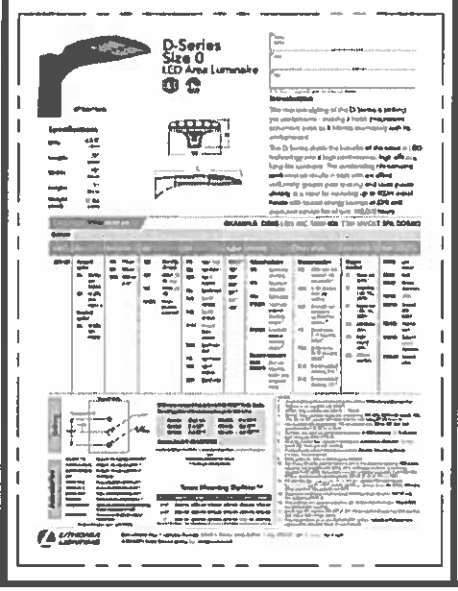

C17

C18

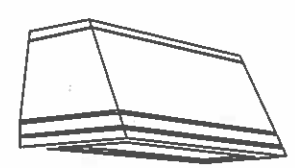

WALL MOUNTED LIGHTING
NOT TO SCALE

ROCHESTER PLANNING FILE: 216-29-GRD-2015

REVISION	DATE	DESCRIPTION
#4	8-04-15	REDESIGN FOR 30' ACCESS EASEMENT
#3	5-22-15	PER R.O.D. AND CONDITIONS OF APPROVAL
#2	5-11-15	PER PLANNING BOARD REVIEW
#1	4-08-15	POST-APPLICATION TECHNICAL REVISIONS

CONSTRUCTION DETAILS
LAND OF
21 FARMINGTON ROAD LLC
21 FARMINGTON ROAD, ROUTE 11
ROCHESTER, NH 03867
TAX MAP 216, LOT 29

BERRY SURVEYING & ENGINEERING
335 SECOND CROWN POINT ROAD
BARRINGTON, NH 03825 (332-2863)

SCALE : AS MARKED
DATE : MARCH 30, 2015
FILE NO. : DB 2014-149

STATE OF NEW HAMPSHIRE
KENNETH A. BERRY
No. 14243
LICENSED
PROFESSIONAL ENGINEER

C-102

C20

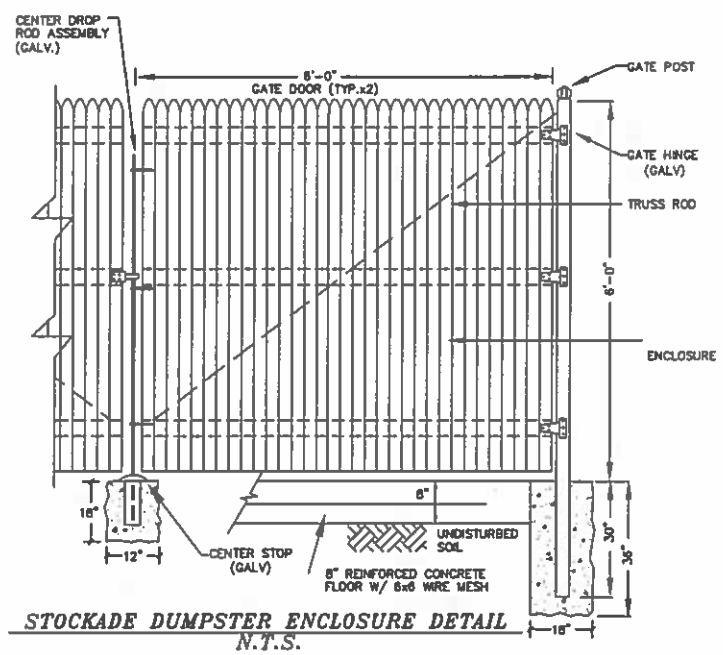

STOCKADE DUMPSTER ENCLOSURE DETAIL
N.T.S.

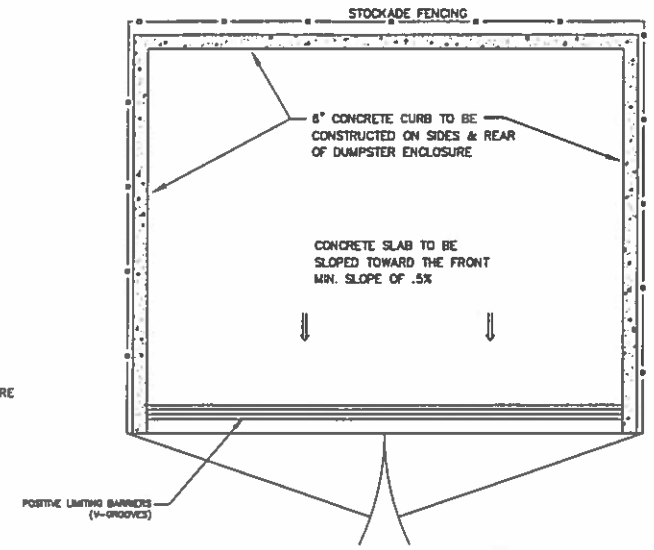

DUMPSTER SLAB DETAILS
N.T.S. NOT TO SCALE

C21

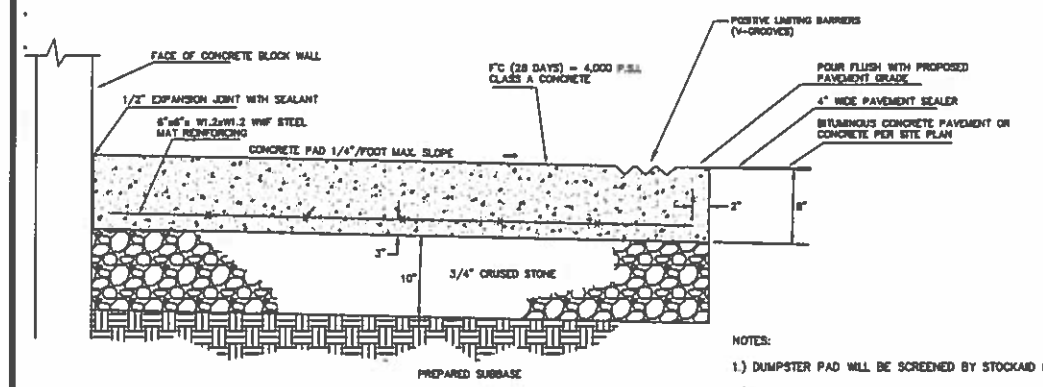

SECTION VIEW

DUMPSTER PAD & CONCRETE PAVEMENT
NOT TO SCALE

NOTES:

1.) DUMPSTER PAD WILL BE SCREENED BY STOCKAID FENCE.
2.) GATE ENCLOSURES WILL NOT BE INCLUDED.
3.) CONFIGUARATION WILL ENCLOSE 2-8 YARD DUMPSTERS.
4.) ADDITIONAL AREA FOR PALLET STORAGE.

C22

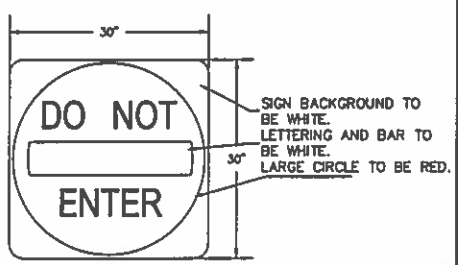

SIGN R5-1 AS SHOWN IN THE MUTCD. INSTALLATION WILL BE IN ACCORDANCE WITH THE MUTCD.

C23

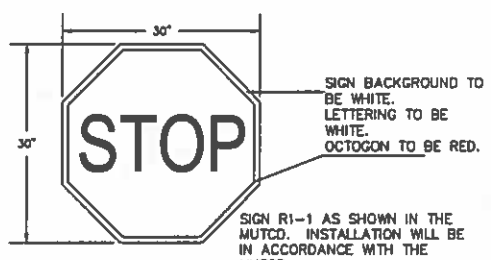

SIGN R1-1 AS SHOWN IN THE MUTCD. INSTALLATION WILL BE IN ACCORDANCE WITH THE MUTCD.

C24

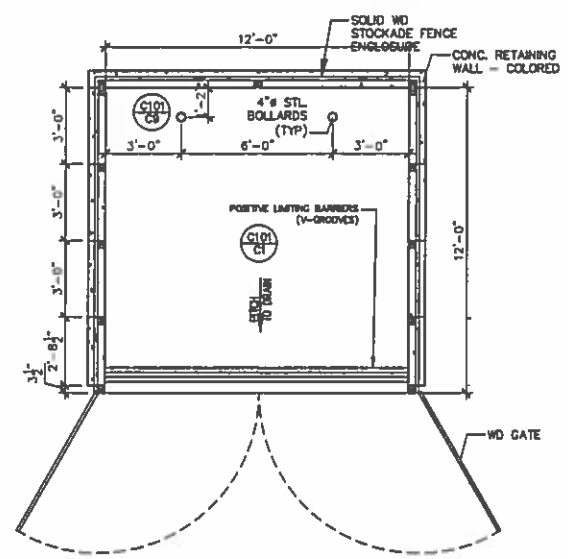

DUMPSTER ENCLOSURE & CONCRETE PAD PLAN
NOT TO SCALE

C26

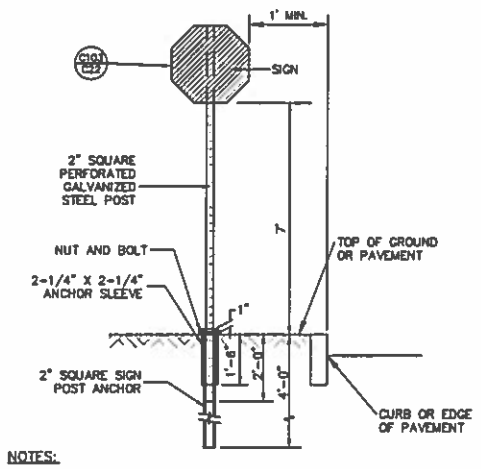

NOTES:

1. ALL SIGNAGE SHALL BE TO THE MANUAL OF UNIFORM TRAFFIC CONTROL DEVICES (MUTCD) STANDARDS AND NHDOT STANDARDS.
2. THE CONTRACTOR SHALL PROVIDE SHOP DRAWINGS/CATALOG CUTS TO THE ENGINEER FOR REVIEW AND APPROVAL PRIOR TO ERECTING SIGNS.
3. THE LOCATION OF THE SIGNS SHALL BE AS INDICATED ON THE DRAWINGS AND/OR AS DIRECTED BY THE CITY OF ROCHESTER DEPARTMENT OF PUBLIC WORKS.

TYPICAL SIGN POST
(NOT TO SCALE)

C25

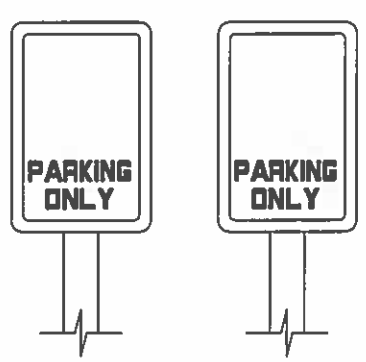

PARTIAL ELEVATION N.T.S.

PARTIAL ELEVATION N.T.S.

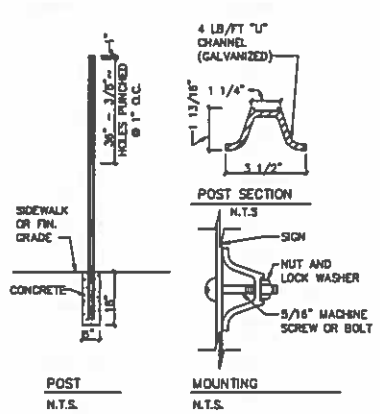

POST N.T.S.

MOUNTING N.T.S.

PARTIAL ELEVATION N.T.S.

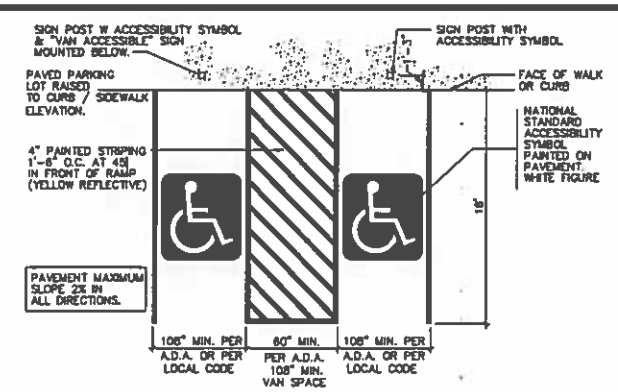

PARKING STALL SIGNAGE FOR THE PHYSICALLY CHALLENGED
NOT TO SCALE

ROCHESTER PLANNING FILE: 216-29-GRD-2015

REVISION	DATE	DESCRIPTION
A3	5-22-15	PER H.O.D. AND CONDITIONS OF APPROVAL
B1	4-08-15	PRE-ROCHESTER TECHNICAL REVISIONS
		POST-APPLICATION TECHNICAL REVISIONS

CONSTRUCTION DETAILS
LAND OF
21 FARMINGTON ROAD LLC
21 FARMINGTON ROAD, ROUTE 11
ROCHESTER, NH 03867
TAX MAP 216, LOT 29

BERRY SURVEYING & ENGINEERING
335 SECOND CROWN POINT ROAD
BARRINGTON, NH 03825 (332-2863)

SCALE : AS MARKED
DATE : MARCH 30, 2015
FILE NO. : DB 2014-149

STATE OF NEW HAMPSHIRE
KENNETH A. BERRY
No. 14243
LICENSED
PROFESSIONAL ENGINEER

C-103

SHEET 16 OF 20

U1

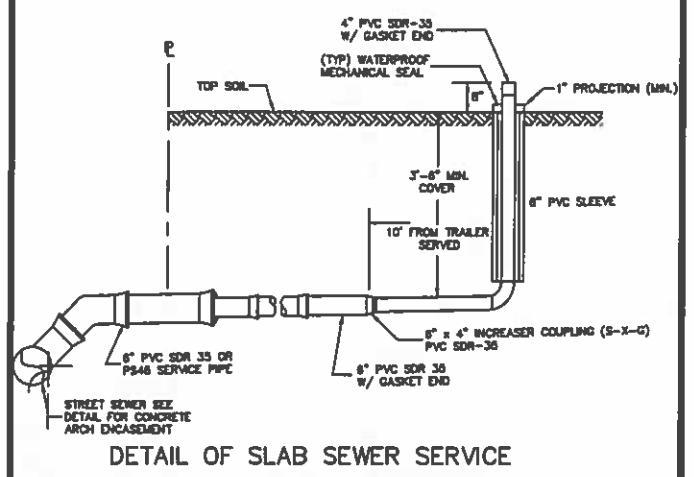

DETAIL OF SLAB SEWER SERVICE

U2

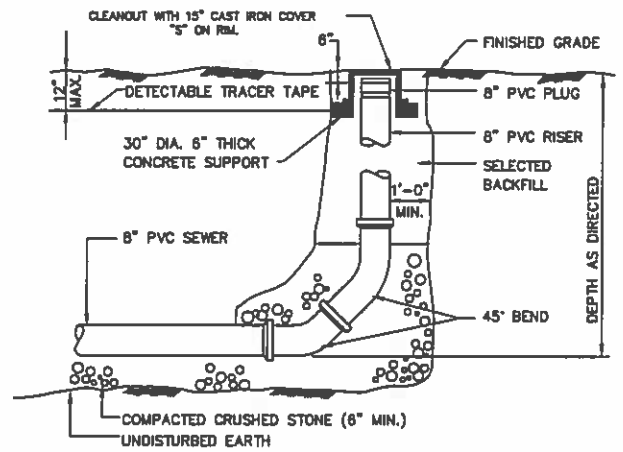

SEWER CLEAN OUT

NOT TO SCALE

U3

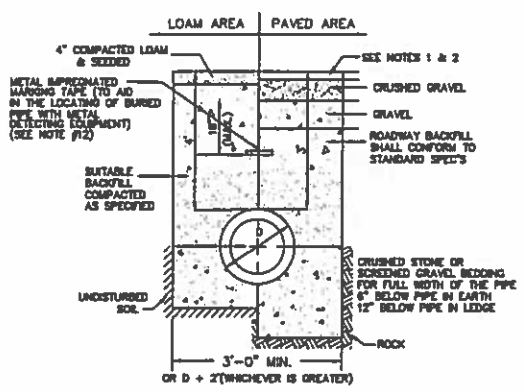

NOTE:
1. PAVEMENT REPAIR IN EXISTING ROADWAYS SHALL CONFORM TO STREET OPENING REGULATIONS.
2. NEW ROADWAY CONSTRUCTION SHALL CONFORM TO SUBDIVISION SPEC'S.

TYPICAL SEWER TRENCH DETAIL

NOT TO SCALE

U4

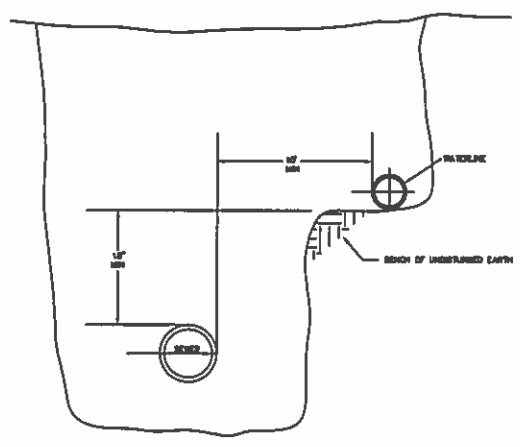

WATER AND SEWER IN SAME TRENCH
(SPECIAL CONDITIONS SEE NOTE 8)

U5

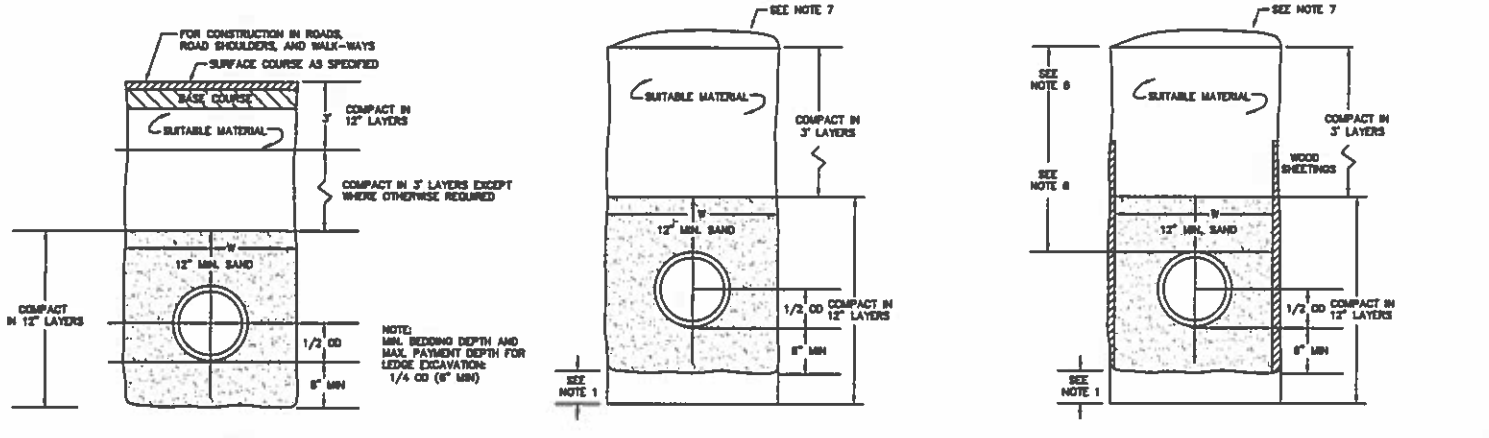

A LEDGE CONSTRUCTION A
NOT TO SCALE

B EARTH CONSTRUCTION B
NOT TO SCALE

C EARTH CONSTRUCTION WITH SHEETING C
NOT TO SCALE

U6

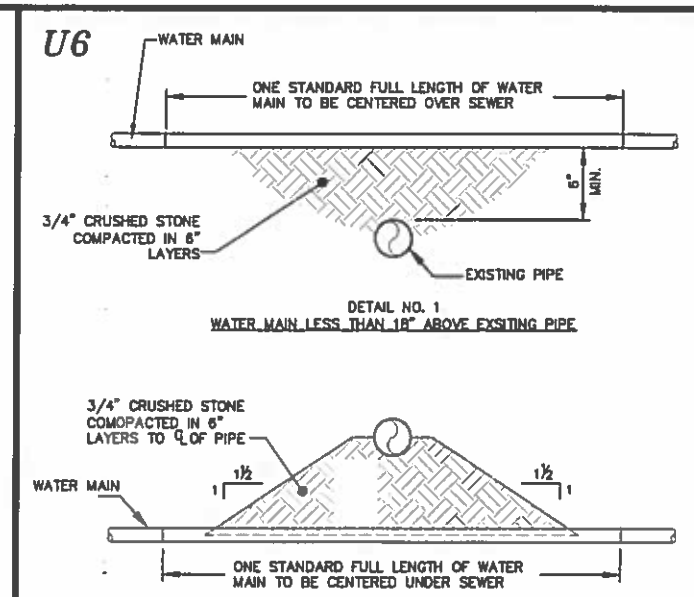

NOTES:

1. TYPICAL SEPARATIONS BETWEEN WATER AND SEWER PIPE SHALL BE 10' MINIMUM HORIZONTAL AND 18" MINIMUM VERTICAL. UNDER NO CIRCUMSTANCES SHALL THE SEWER BE LESS THAN 18" ABOVE THE WATER MAIN.
2. WATER MAIN SHALL BE PUSH ON OR MECHANICAL JOINT CAST IRON OR DUCTILE IRON PIPE FOR A DISTANCE OR 10 FEET EACH SIDE OF THE CENTERLINE OF THE SEWER.
3. IF WATER MAIN PASSES UNDERNEATH SEWER, THE SEWER LINE SHALL BE SUPPORTED WITH A CONCRETE CRADLE TO EXTEND A MINIMUM OF 2'-0" BEYOND THE WATER MAIN TRENCH WIDTH ON EACH SIDE.
4. IF DISTANCE BETWEEN WATER MAIN AND DRAIN LINE IS LESS THAN 1'-0", SUBSTITUTE A CONCRETE CRADLE OR SADDLE FOR CRUSHED STONE.

CROSSING DETAILS

NOT TO SCALE

U7

TYPICAL TRENCH DETAIL FOR WATER SYSTEM

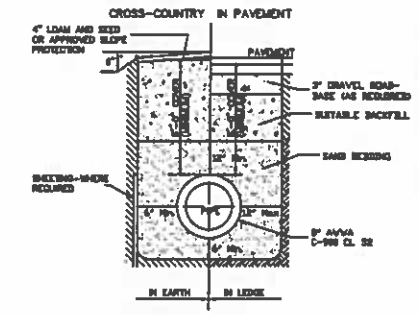

U9

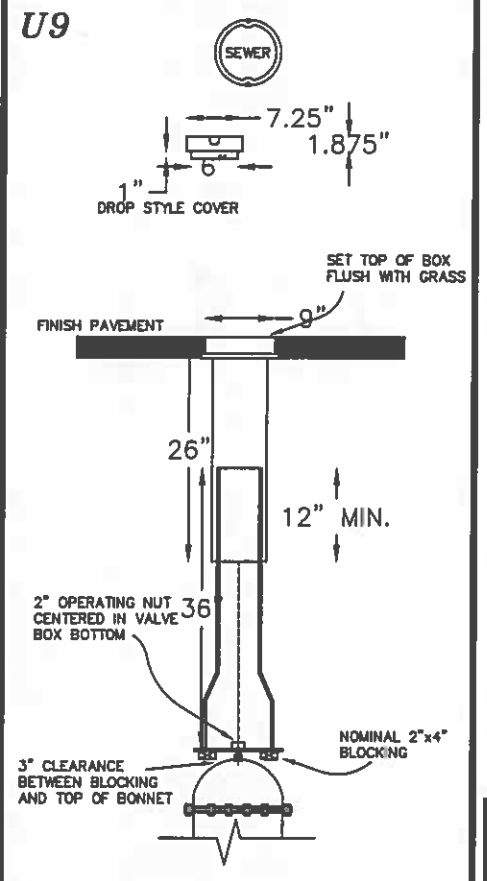

VALVE BOX DETAIL

NOT TO SCALE

U8

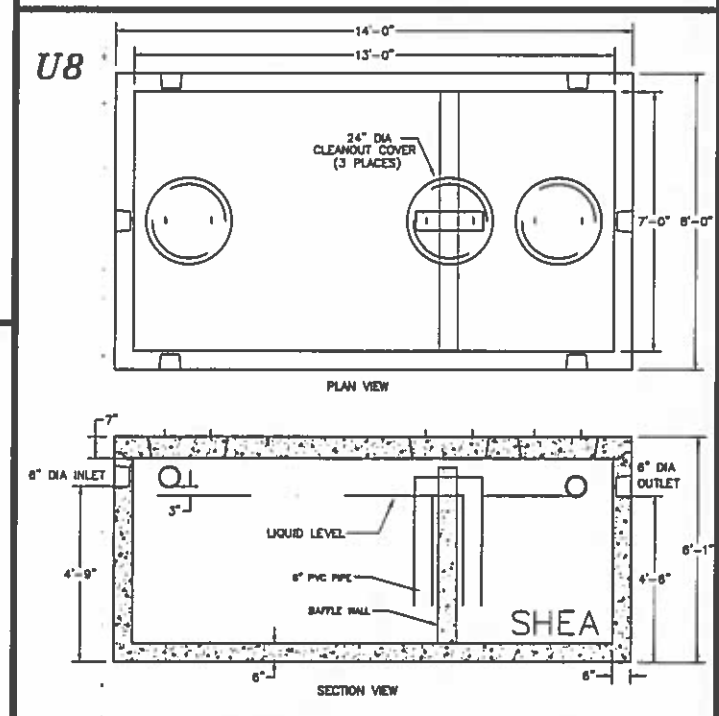

NOTES:

1. CONCRETE: 5,000 PSI MINIMUM AFTER 28 DAYS.
2. DESIGN CONFORMS WITH 310 CMR 15.00, DEP TITLE 5 REGS, FOR SEPTIC TANKS.
3. ALL REINFORCEMENT PER ASTM C1227.
4. BAFFLE WALL FOR TWO COMPARTMENT TANKS.
5. DESIGNED FOR H-20 LOADING.
6. TONGUE & GROOVE JOINT SEALED WITH BUTYL RESIN.
7. TEES AND BAFFLES SOLD SEPARATELY.

*MANUAL SHUTOFF VALVE TO BE INSTALLED BETWEEN SEPARATOR AND SEWER SERVICE SEE DETAIL U10

FLOOR DRAIN GRIT SEPARATOR

NOT TO SCALE

U10

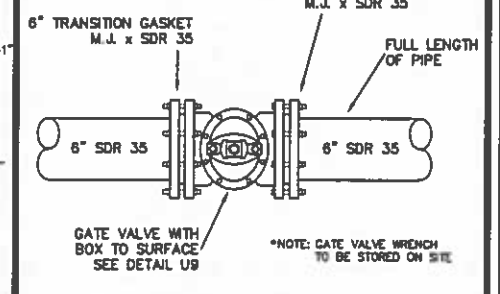

SHUTOFF VALVE DETAIL

NOT TO SCALE

U-101

ROCHESTER PLANNING FILE: 216-29-GRD-2015

REVISION	DATE	DESCRIPTION
F3	5-26-15	PER H.O.D. AND CONDITIONS OF APPROVAL
F2	4-28-15	PER ROCHESTER TRC REVIEW
F1	4-08-15	POST-APPLICATION TECHNICAL REVISIONS

UTILITY DETAILS
LAND OF
21 FARMINGTON ROAD LLC
21 FARMINGTON ROAD, ROUTE 11
ROCHESTER, NH 03867
TAX MAP 216, LOT 29

BERRY SURVEYING & ENGINEERING
335 SECOND CROWN POINT ROAD
BARRINGTON, NH 03825 (332-2863)

SCALE : AS MARKED
DATE : MARCH 30, 2015
FILE NO. : DB 2014-149

STATE OF NEW HAMPSHIRE
KENNETH A. BERRY
No. 1243
LICENSED
PROFESSIONAL ENGINEER

SHEET 17 OF 20

L1

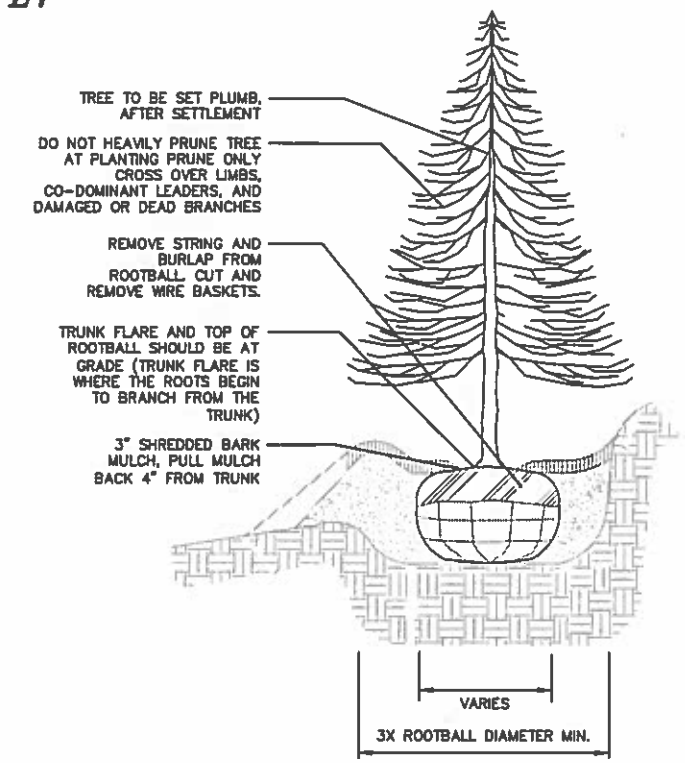

NOTES:
1. DO NOT STAKE EVERGREEN TREES.
2. LOAM FOR BACKFILLING SHALL BE AMENDED AS REQUIRED BY LANDSCAPE ARCHITECT.
3. TAMP BACKFILL SOIL AROUND ROOTBALL FIRMLY TO MINIMIZE ROOTBALL SHIFT.

EVERGREEN TREE PLANTING

L2

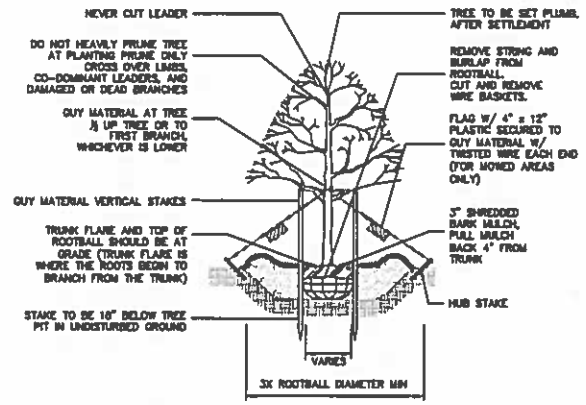

NOTES:
1. GUYING AND STAKING TO BE DETERMINED IN THE FIELD BY THE LANDSCAPE ARCHITECT. LOCAL FIELD CONDITIONS AS WELL AS PLANT CHARACTERISTICS WILL DETERMINE THE NECESSITY OF GUYING AND STAKING.
2. TYPICALLY ONLY TREES WITH A 3" OR GREATER CALIPER NEED TO BE STAKED. TREES WITH LESS THAN A 3" CALIPER NEED TO BE STAKED ONLY AS REQUIRED BY LANDSCAPE ARCHITECT.
3. ONLY WRAP TREE TRUNKS AS REQUIRED BY LANDSCAPE ARCHITECT.
4. TREE SHALL BE SET PLUMB AFTER SETTLEMENT.
5. LOAM FOR BACKFILLING SHALL BE AMENDED AS REQUIRED BY LANDSCAPE ARCHITECT.
6. CITY TREES PLANTED ON PRIVATE PROPERTY, ADJACENT TO A PUBLIC RIGHT-OF-WAY, NEED TO BE PLANTED A MINIMUM OF 5 FEET FROM THE EDGE OF THE CITY SIDEWALK.

DECIDUOUS TREE PLANTING

L3

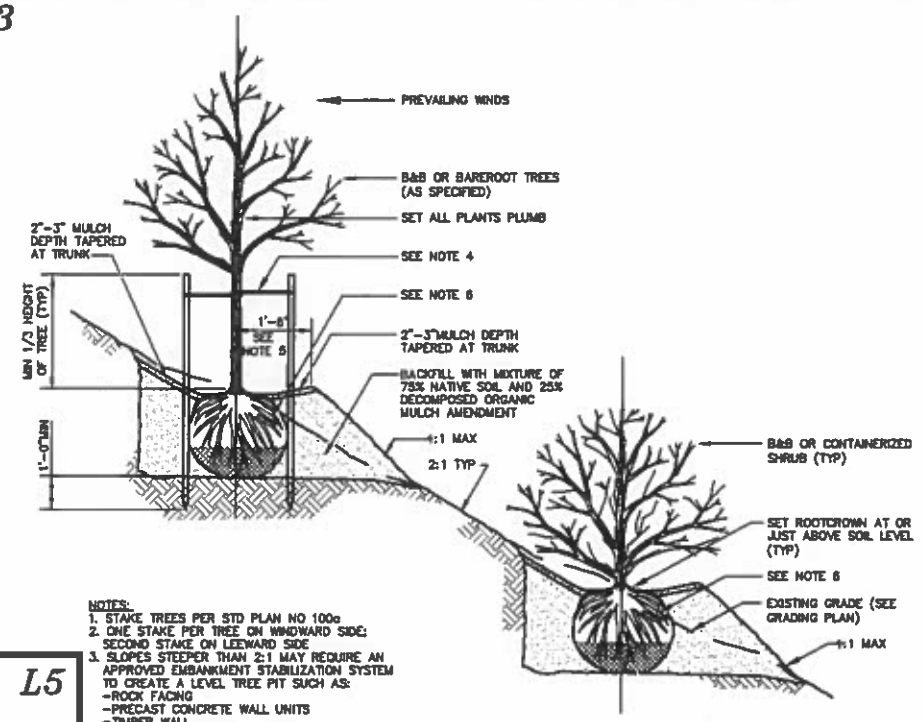

NOTES:
1. STAKE TREES PER STD PLAN NO 100a
2. ONE STAKE PER TREE ON WINDWARD SIDE; SECOND STAKE ON LEEWARD SIDE
3. SLOPES STEEPER THAN 2:1 MAY REQUIRE AN APPROVED EMBANKMENT STABILIZATION SYSTEM TO CREATE A LEVEL TREE PIT SUCH AS:
   - ROCK FACING
   - PRECAST CONCRETE WALL UNITS
   - TIMBER WALL
   - MANUFACTURED SLOPE RETENTION UNITS
4. CHAINLOCK TREE TIE. LOOP EACH TIE AROUND TREE LOOSELY TO PROVIDE 1" SLACK FOR DIAMETER GROWTH.
5. SHAPE SOIL TO PROVIDE 3' DIAMETER OR ROOTBALL DIAMETER, WHICHEVER IS GREATER, WATERING RING.
6. REMOVE ALL WIRE AND STRING. REMOVE TOP 2/3 OF BURLAP.

TREE PLANTING ON SLOPES

L4

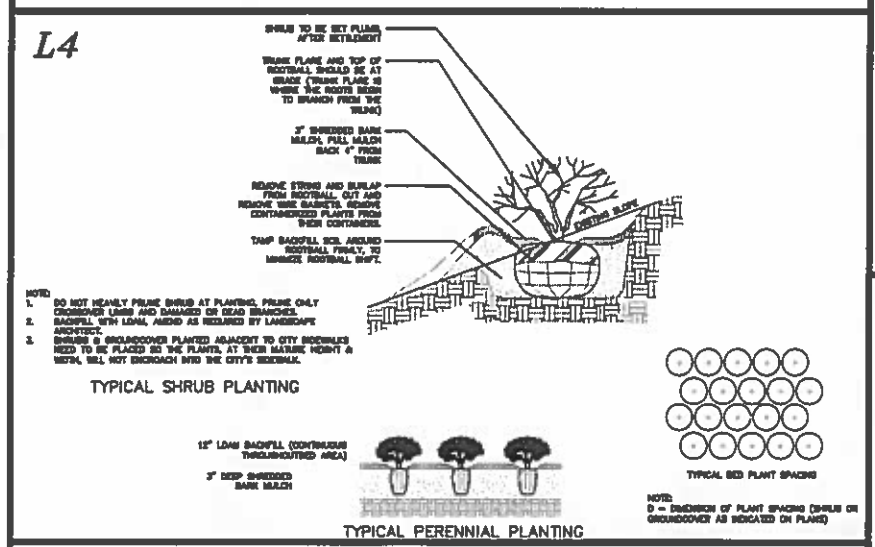

NOTE:
1. DO NOT HEAVILY PRUNE SHRUB AT PLANTING. PRUNE ONLY CROSSOVER LIMBS AND DAMAGED OR DEAD BRANCHES.
2. BACKFILL WITH LOAM, AMEND AS REQUIRED BY LANDSCAPE ARCHITECT.
3. SHRUBS & GROUNDCOVER PLANTED ADJACENT TO CITY SIDEWALKS NEED TO BE PLACED SO THE PLANTS AT THEIR MATURE HEIGHT & WIDTH, WILL NOT ENCROACH INTO THE CITY'S SIDEWALK.

TYPICAL SHRUB PLANTING

NOTE:
D = DIMENSION OF PLANT SPACING (SHRUB OR GROUNDCOVER AS INDICATED ON PLANS)

TYPICAL PERENNIAL PLANTING

L5

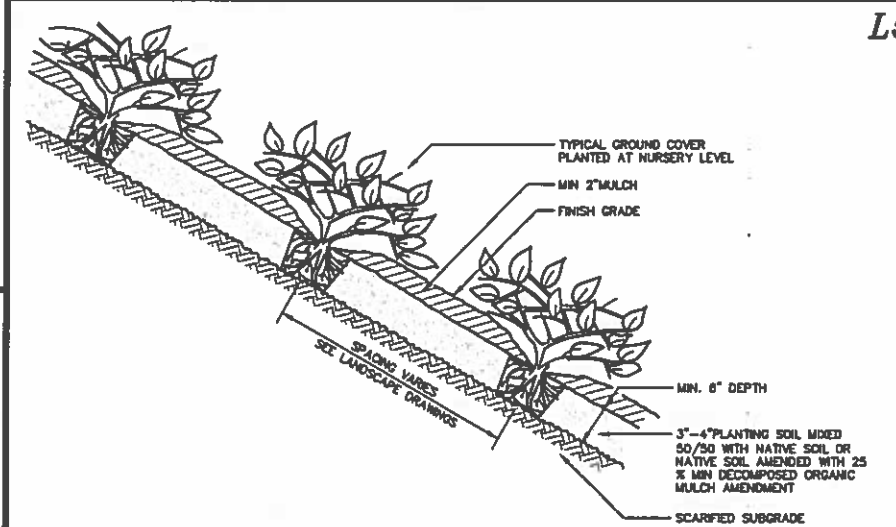

TYPICAL SLOPE GROUND COVER PLANTINGS

L7

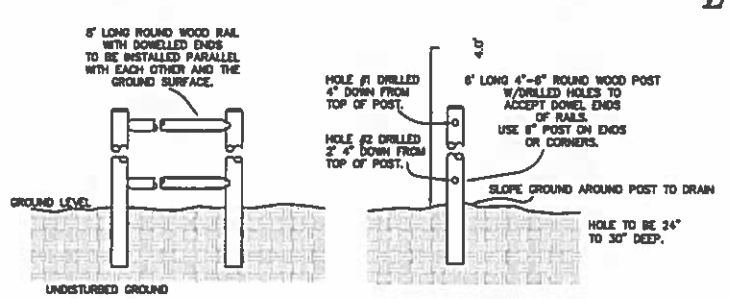

TYPICAL POST & RAIL FENCE DETAIL
N.T.S.

L8

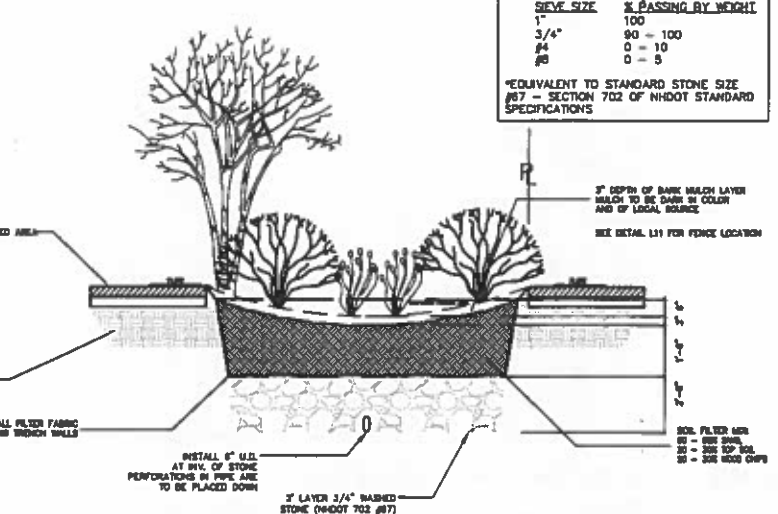

CRUSHED STONE BEDDING*

SIEVE SIZE	% PASSING BY WEIGHT
1"	100
3/4"	90 – 100
#4	0 – 10
#8	0 – 5

*EQUIVALENT TO STANDARD STONE SIZE #57 – SECTION 702 OF NHDOT STANDARD SPECIFICATIONS

TYPICAL BIORETENTION DRY-SWALE
NOT TO SCALE

L11

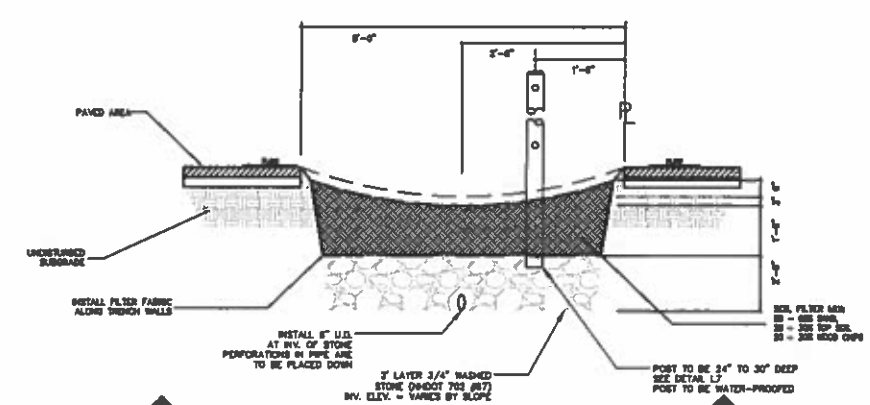

FENCE LOCATION – DRY-SWALE
NOT TO SCALE

L9

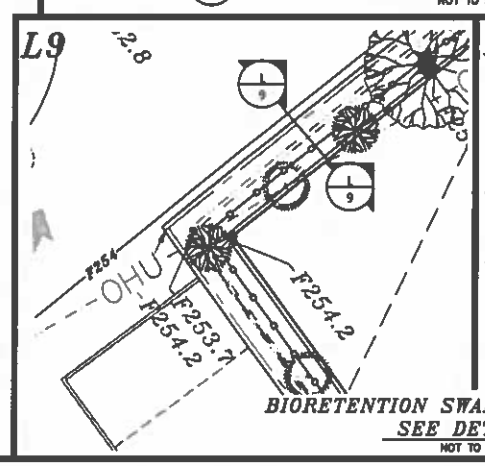

L10

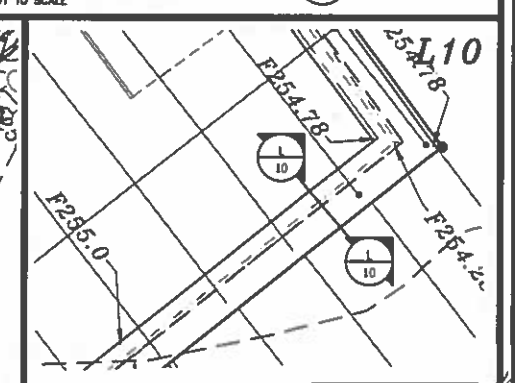

BIORETENTION SWALE CROSS SECTION
SEE DETAIL L8
NOT TO SCALE

L-101

ROCHESTER PLANNING FILE: 216-29-GRD-2015

REVISION	DATE	DESCRIPTION
#3	5-22-15	PER NOD AND CONDITIONS OF APPROVAL
#2	5-26-15	PER ROCHESTER TECHNICAL REVIEW
#1	4-09-15	POST-APPLICATION TECHNICAL REVISIONS

LANDSCAPING DETAILS
LAND OF
21 FARMINGTON ROAD LLC
21 FARMINGTON ROAD, ROUTE 11
ROCHESTER, NH 03867
TAX MAP 216, LOT 29

BERRY SURVEYING & ENGINEERING
335 SECOND CROWN POINT ROAD
BARRINGTON, NH 03825 (332-2863)

SCALE : AS MARKED
DATE : MARCH 30, 2015
FILE NO. : DB 2014-149

STATE OF NEW HAMPSHIRE KENNETH A. BERRY No. 14243 LICENSED PROFESSIONAL ENGINEER

SHEET 18 OF 20

1.) THE RAIN GARDEN SUBGRADE IS NOT TO BE IMPACTED BY VEHICLE TRAFFIC. IF THIS INADVERTENTLY HAPPENS THE CONTRACTOR IS TO SCARIFY TO A DEPTH OF 6"

RAIN GARDEN #1 CROSS SECTION
POND #8
NOT TO SCALE

R1

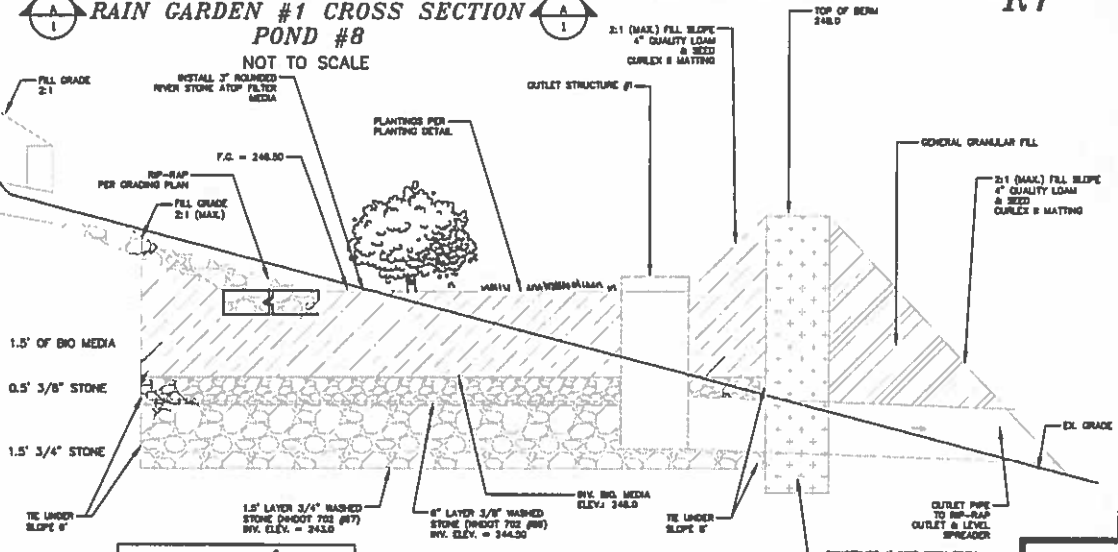

NOTES:

1. WHEN CONTRACTOR EXCAVATES RAIN GARDEN AREA TO SUBGRADE, DESIGN ENGINEER SHALL PERFORM SUBSURFACE EVALUATION PRIOR TO THE PLACEMENT OF ANY SELECT MATERIAL OR OTHER BACKFILL.
2. SOIL FILTER MEDIA SHALL BE AS SHOWN ABOVE.
3. GENERAL CONSTRUCTION NOTES ON THIS PLAN ALSO APPLY TO RAIN GARDEN #1

MAINTENANCE REQUIREMENTS

1. SYSTEMS SHOULD BE INSPECTED AT LEAST TWICE ANNUALLY, AND FOLLOWING ANY RAINFALL EXCEEDING 2.5 INCHES IN A 24-HOUR PERIOD, WITH MAINTENANCE OR REHABILITATION CONDUCTED AS A WARRANTED BY SUCH INSPECTION.
2. PRETREATMENT MEASURES SHOULD BE INSPECTED AT LEAST TWICE ANNUALLY, AND CLEANED OF ACCUMULATED SEDIMENT AS WARRANTED BY INSPECTION, BUT NO LESS THAN ONCE ANNUALLY.
3. AT LEAST ONCE ANNUALLY, SYSTEM SHOULD BE INSPECTED FOR DRAWDOWN TIME. IF BIORETENTION SYSTEM DOES NOT DRAIN WITHIN 72-HOURS FOLLOWING A RAINFALL EVENT, THEN A QUALIFIED PROFESSIONAL SHOULD ASSESS THE CONDITION OF THE FACILITY TO DETERMINE MEASURES REQUIRED TO RESTORE FILTRATION FUNCTION OR INFILTRATION FUNCTION (AS APPLICABLE), INCLUDING BUT NOT LIMITED TO REMOVAL OF ACCUMULATED SEDIMENTS OR RECONSTRUCTION OF THE FILTER MEDIA.
4. VEGETATION SHOULD BE INSPECTED AT LEAST ANNUALLY, AND MAINTAINED IN HEALTHY CONDITION, INCLUDING PRUNING, REMOVAL, AND REPLACEMENT OF DEAD OR DISEASED VEGETATION, AND REMOVAL OF INVASIVE SPECIES.

DESIGN REFERENCES

1. UNH STORMWATER CENTER
2. NEW HAMPSHIRE STORMWATER MANAGEMENT MANUAL, VOLUME 2, DECEMBER 2008 AS AMENDED.

CRUSHED STONE BEDDING*

SIEVE SIZE	% PASSING BY WEIGHT
1/2"	100
3/8"	90 – 100
#4"	20 – 55
# 8	5 – 30
# 16	0 – 10
# 50	0 – 5

* EQUIVALENT TO STANDARD STONE SIZE #89 – SECTION 702 OF NHDOT NHDOT STANDARD SPECIFICATIONS

CRUSHED STONE BEDDING*

SIEVE SIZE	% PASSING BY WEIGHT
1"	100
3/4"	90 – 100
#4	0 – 10
#8	0 – 5

*EQUIVALENT TO STANDARD STONE SIZE #67 – SECTION 702 OF NHDOT STANDARD SPECIFICATIONS

LOW PERMEABILITY MATERIAL GRADATION

SIEVE SIZE	% PASSING BY WEIGHT
#4	95 – 100
#40	60 – 95
#100	40 – 80
#200	25 – 45

R2

1. PIPE SHALL HAVE TYPE A RUBBER GASKETS AT JOINTS SHALL BE MADE WATER-TIGHT WITH BITUMASTIC SEALANT AND TESTED FOR SEEPAGE PRIOR TO BACKFILL.
2. ANTI-SEEP COLLARS SHALL BE PLACED 15'± AND 25'± DOWNSTREAM OF LAST COLLAR PLACED UPSTREAM OF THE LOW PERMEABILITY MATERIAL.

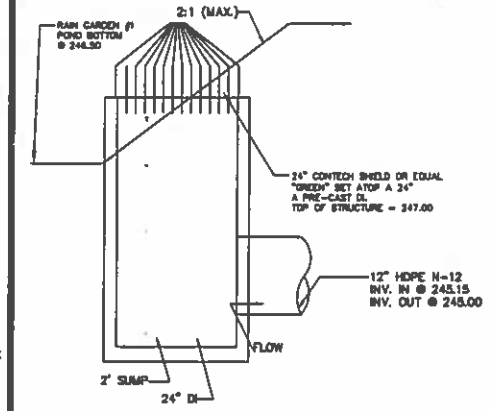

OUTLET STRUCTURE #1
NOT TO SCALE

R5

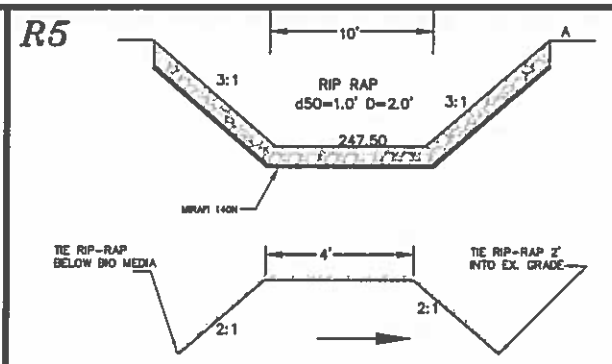

EMERGENCY SPILLWAY PROFILE

SPILLWAY DETAILS
NOT TO SCALE

R4

FILTER MEDIA MIXTURES

Component Material	Percent of Mixture by Volume	Gradation of material: Sieve No.	Gradation of material: Percent by Weight Passing Standard Sieve
Filter Media Option A			
ASTM C-33 concrete sand	50 to 55		
Loamy sand topsoil, with fines as indicated	20 to 30	200	15 to 25
Moderately fine shredded bark or wood fiber mulch, with fines as indicated	20 to 30	200	< 5

R6

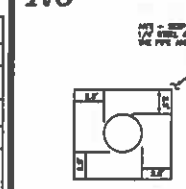

ANTI-SEEP COLLAR DETAIL
NOT TO SCALE

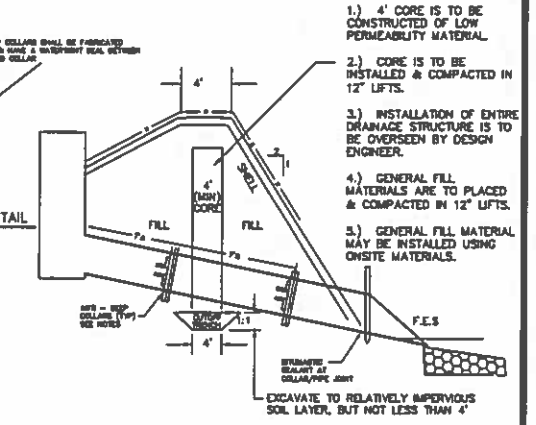

1.) 4' CORE IS TO BE CONSTRUCTED OF LOW PERMEABILITY MATERIAL.

2.) CORE IS TO BE INSTALLED & COMPACTED IN 12" LIFTS.

3.) INSTALLATION OF ENTIRE DRAINAGE STRUCTURE IS TO BE OVERSEEN BY DESIGN ENGINEER.

4.) GENERAL FILL MATERIALS ARE TO PLACED & COMPACTED IN 12" LIFTS.

5.) GENERAL FILL MATERIAL MAY BE INSTALLED USING ONSITE MATERIALS.

RAIN GARDEN DETAIL #1
POND #8

R3

GRAPHIC SCALE

(IN FEET)
1 inch = 10 ft.

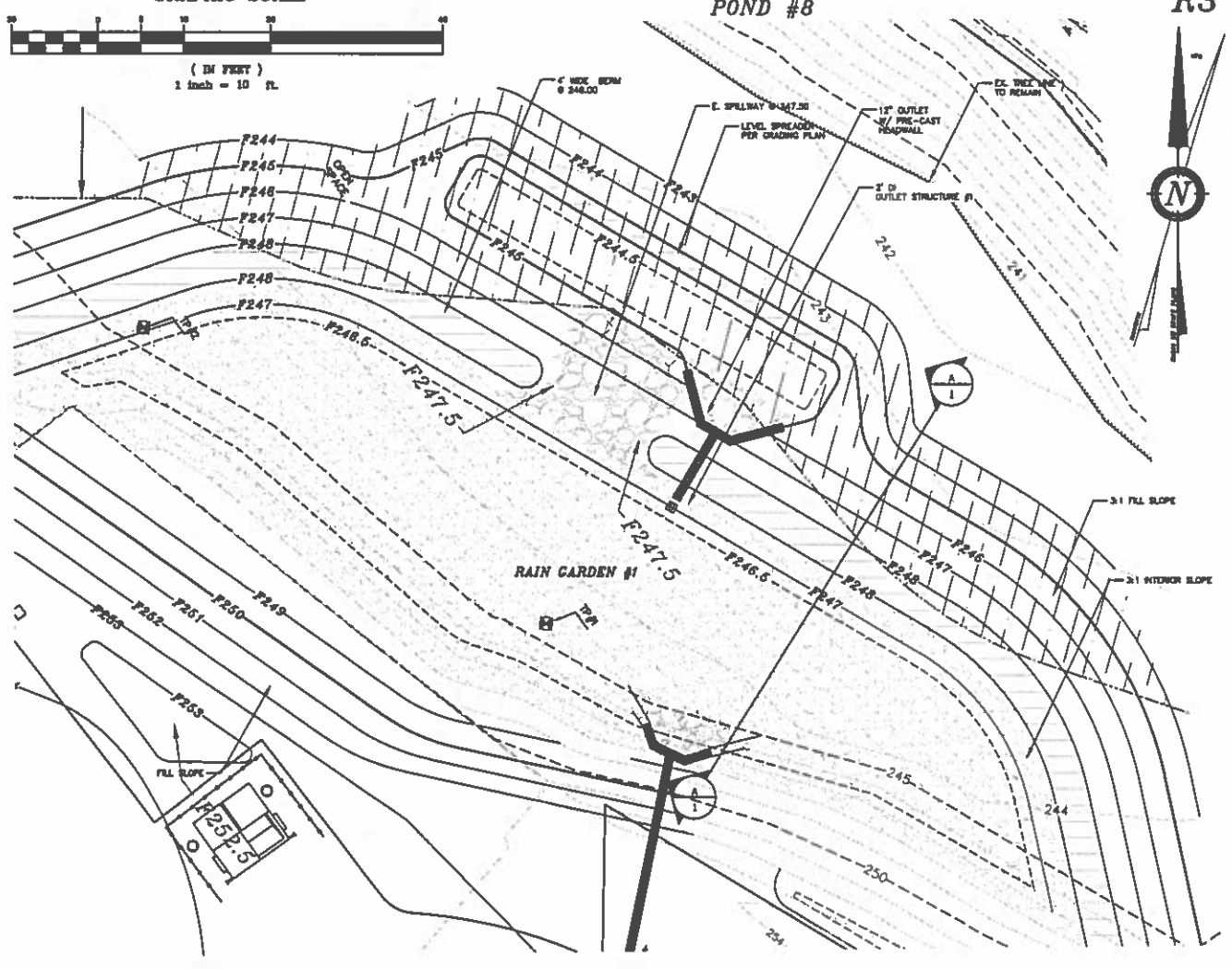

GRAPHIC SCALE

(IN FEET)
1 inch = 10 ft.

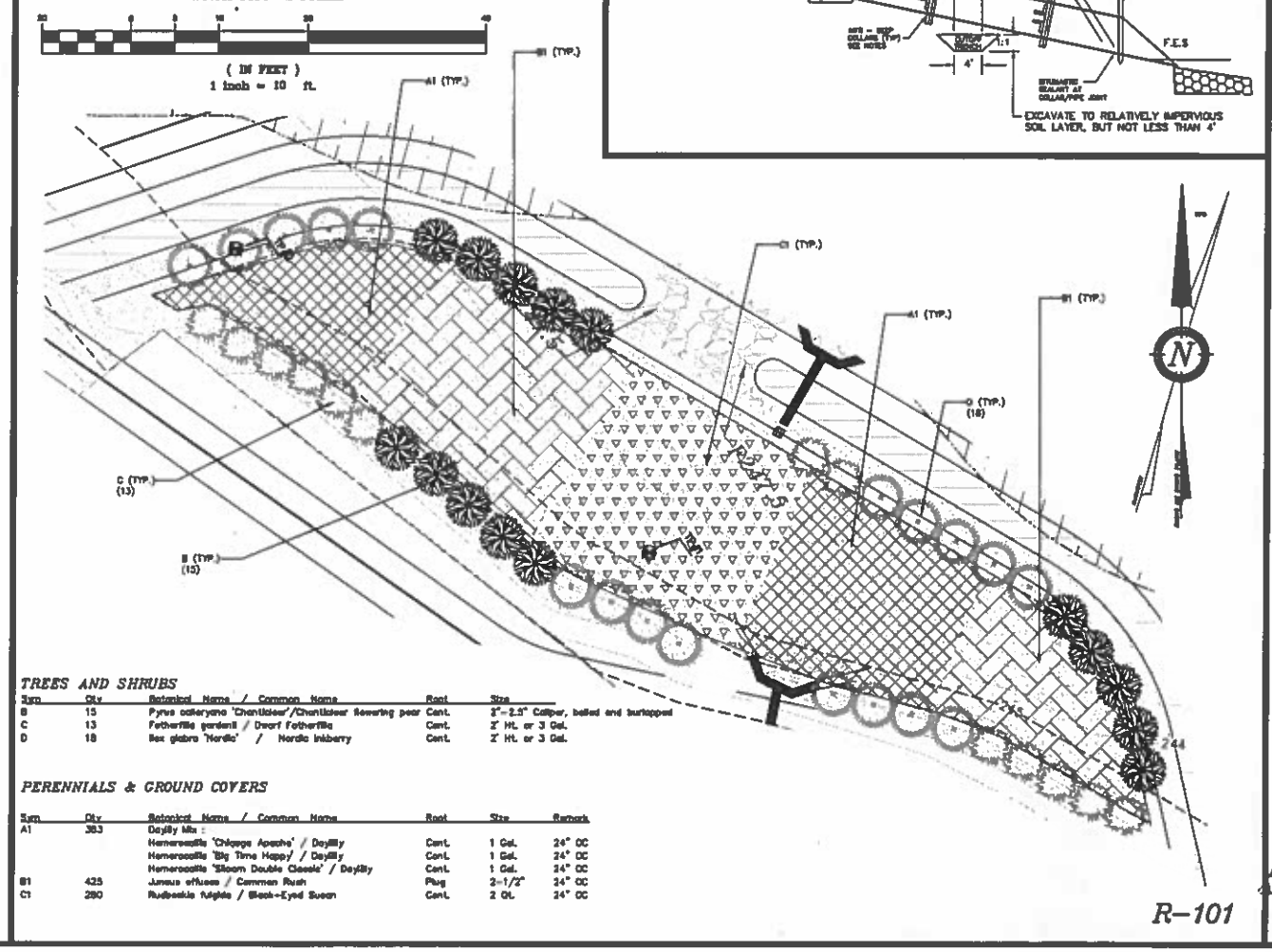

TREES AND SHRUBS

Sym	Qty	Botanical Name / Common Name	Root	Size
B	15	Pyrus calleryana 'Chanticleer'/Chanticleer flowering pear	Cont.	2"-2.5" Caliper, balled and burlapped
C	13	Fothergilla gardenii / Dwarf Fothergilla	Cont.	2' Ht. or 3 Gal.
D	18	Ilex glabra 'Nordia' / Nordia Inkberry	Cont.	2' Ht. or 3 Gal.

PERENNIALS & GROUND COVERS

Sym	Qty	Botanical Name / Common Name	Root	Size	Remark
A1	383	Daylily Mix :			
		Hemerocallis 'Chicago Apache' / Daylily	Cont.	1 Gal.	24" OC
		Hemerocallis 'Big Time Happy' / Daylily	Cont.	1 Gal.	24" OC
		Hemerocallis 'Bloom Double Classic' / Daylily	Cont.	1 Gal.	24" OC
B1	425	Juncus effusus / Common Rush	Plug	2-1/2"	24" OC
C1	280	Rudbeckia fulgida / Black-Eyed Susan	Cont.	2 Gl.	24" OC

R-101

ROCHESTER PLANNING # 216-29-GRD-2015

REVISION	DATE	DESCRIPTION
#4	8-04-15	REDESIGN FOR 30' ACCESS EASEMENT
#2	8-22-15	PER N.O.D. AND CONDITIONS OF APPROVAL
#1	4-28-15	PER INSPECTOR TWO REVIEW
		POST-APPLICATION TECHNICAL REVISIONS

RAIN GARDEN #1 DETAIL
LAND OF
21 FARMINGTON ROAD LLC
21 FARMINGTON ROAD, ROUTE 11
ROCHESTER, NH 03867
TAX MAP 216, LOT 29

BERRY SURVEYING & ENGINEERING
335 SECOND CROWN POINT ROAD
BARRINGTON, NH 03825 (332-2863)

SCALE : AS NOTED
DATE : MARCH 30, 2015
FILE NO. : DB 2014-149

STATE OF NEW HAMPSHIRE
KENNETH A. BERRY
No. 14243
LICENSED
PROFESSIONAL ENGINEER

1.) THE RAIN GARDEN SUBGRADE IS NOT TO BE IMPACTED BY VEHICLE TRAFFIC. IF THIS INADVERTENTLY HAPPENS THE CONTRACTOR IS TO SCARIFY TO A DEPTH OF 6"

NOTES:

1. WHEN CONTRACTOR EXCAVATES RAIN GARDEN AREA TO SUBGRADE, DESIGN ENGINEER SHALL PERFORM SUBSURFACE EVALUATION PRIOR TO THE PLACEMENT OF ANY SELECT MATERIAL OR OTHER BACKFILL.
2. SOIL FILTER MEDIA SHALL BE AS SHOWN ABOVE.
3. GENERAL CONSTRUCTION NOTES ON THIS PLAN ALSO APPLY TO RAIN GARDEN #2

MAINTENANCE REQUIREMENTS

1. SYSTEMS SHOULD BE INSPECTED AT LEAST TWICE ANNUALLY, AND FOLLOWING ANY RAINFALL EXCEEDING 2.5 INCHES IN A 24-HOUR PERIOD, WITH MAINTENANCE OR REHABILITATION CONDUCTED AS A WARRANTED BY SUCH INSPECTION.
2. PRETREATMENT MEASURES SHOULD BE INSPECTED AT LEAST TWICE ANNUALLY, AND CLEANED OF ACCUMULATED SEDIMENT AS WARRANTED BY INSPECTION, BUT NO LESS THAN ONCE ANNUALLY.
3. AT LEAST ONCE ANNUALLY, SYSTEM SHOULD BE INSPECTED FOR DRAWDOWN TIME. IF BIORETENTION SYSTEM DOES NOT DRAIN WITHIN 72-HOURS FOLLOWING A RAINFALL EVENT, THEN A QUALIFIED PROFESSIONAL SHOULD ASSESS THE CONDITION OF THE FACILITY TO DETERMINE MEASURES REQUIRED TO RESTORE FILTRATION FUNCTION OR INFILTRATION FUNCTION (AS APPLICABLE), INCLUDING BUT NOT LIMITED TO REMOVAL OF ACCUMULATED SEDIMENTS OR RECONSTRUCTION OF THE FILTER MEDIA.
4. VEGETATION SHOULD BE INSPECTED AT LEAST ANNUALLY, AND MAINTAINED IN HEALTHY CONDITION, INCLUDING PRUNING, REMOVAL, AND REPLACEMENT OF DEAD OR DISEASED VEGETATION, AND REMOVAL OF INVASIVE SPECIES.

DESIGN REFERENCES

1. UNH STORMWATER CENTER
2. NEW HAMPSHIRE STORMWATER MANAGEMENT MANUAL, VOLUME 2, DECEMBER 2008 AS AMENDED.

R7

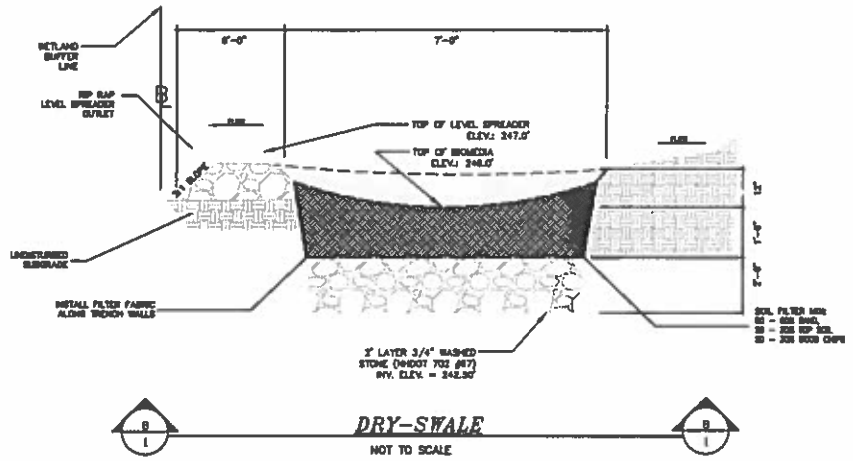

CRUSHED STONE BEDDING*	
SIEVE SIZE	% PASSING BY WEIGHT
1/2"	100
3/8"	90 – 100
#4*	20 – 55
# 8	5 –30
# 16	0 – 10
# 50	0 – 5

* EQUIVALENT TO STANDARD STONE SIZE #89 – SECTION 702 OF NHDOT NHDOT STANDARD SPECIFICATIONS

CRUSHED STONE BEDDING*	
SIEVE SIZE	% PASSING BY WEIGHT
1"	100
3/4"	90 – 100
#4	0 – 10
#8	0 – 5

*EQUIVALENT TO STANDARD STONE SIZE #67 – SECTION 702 OF NHDOT STANDARD SPECIFICATIONS

R8

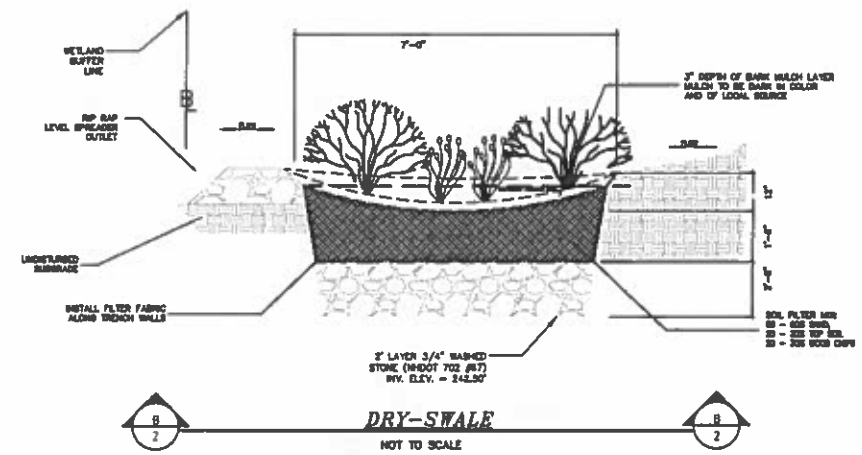

R9

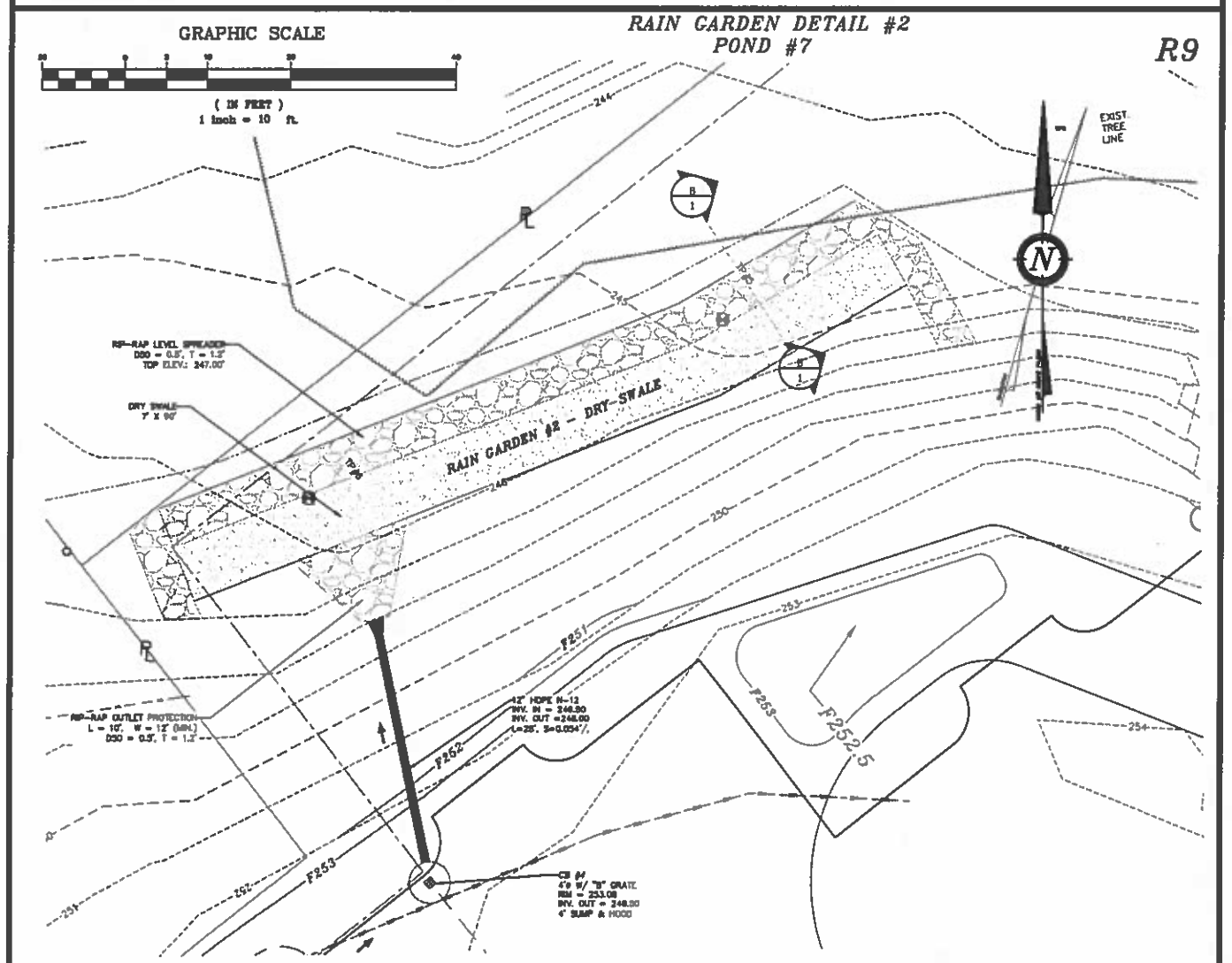

R10

FILTER MEDIA MIXTURES			
Component Material	Percent of Mixture by Volume	Gradation of material	
		Sieve No.	Percent by Weight Passing Standard Sieve
Filter Media Option A			
ASTM C-33 concrete sand	50 to 55		
Loamy sand topsoil, with fines as indicated	20 to 30	200	15 to 25
Moderately fine shredded bark or wood fiber mulch, with fines as indicated	20 to 30	200	< 5

GRAPHIC SCALE

(IN FEET)
1 inch = 10 ft.

R11

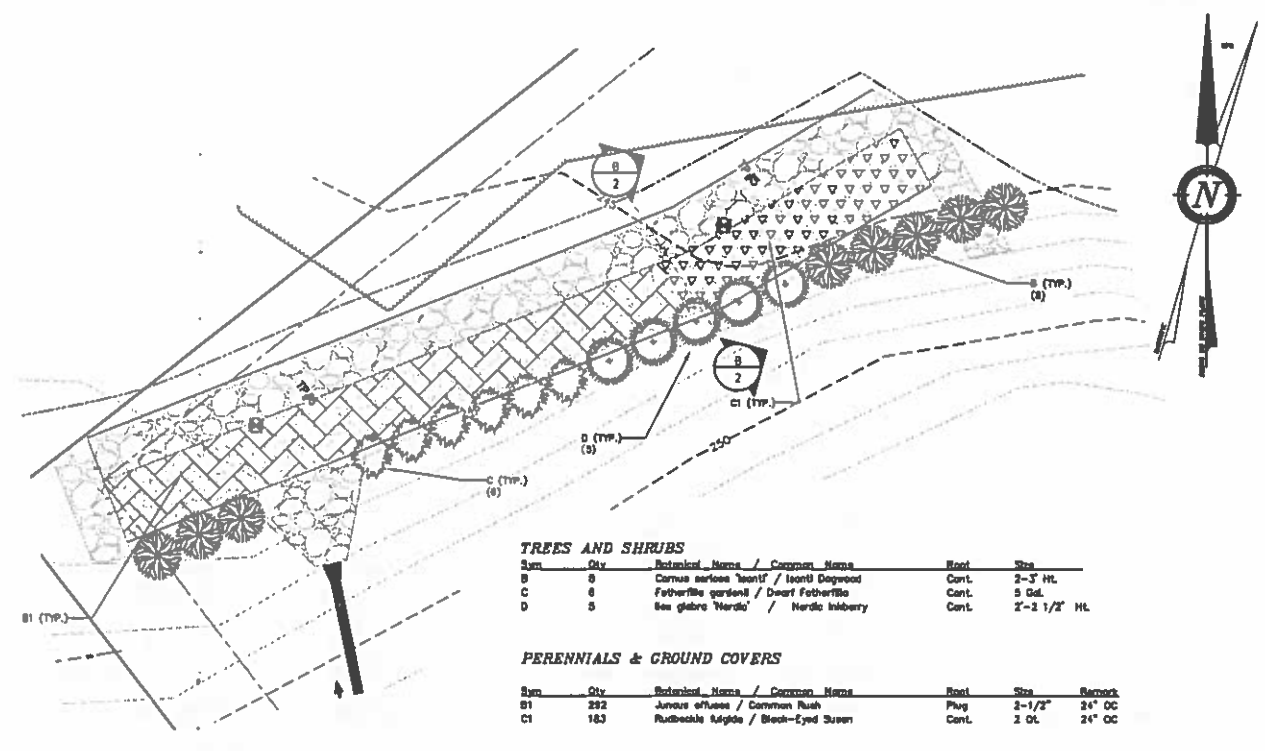

TREES AND SHRUBS

Sym	Qty	Botanical Name / Common Name	Root	Size
B	8	Cornus sericea 'Isanti' / Isanti Dogwood	Cont.	2-3' Ht.
C	6	Fothergilla gardenii / Dwarf Fothergilla	Cont.	5 Gal.
D	5	Ilex glabra 'Nordic' / Nordic Inkberry	Cont.	2'-2 1/2' Ht.

PERENNIALS & GROUND COVERS

Sym	Qty	Botanical Name / Common Name	Root	Size	Remark
B1	292	Juncus effusus / Common Rush	Plug	2-1/2"	24" OC
C1	183	Rudbeckia fulgida / Black-Eyed Susan	Cont.	2 Qt.	24" OC

R-102

ROCHESTER PLANNING # 216-29-GRD-2015

REVISION	DATE	DESCRIPTION
R	11-5-15	PER NHDOT DRIVEWAY PERMIT APPLICATION
R1	8-04-15	REDESIGN FOR 30' ACCESS EASEMENT
R2	5-22-15	PER BOARD AND CONDITIONS OF APPROVAL
R3	5-12-15	PER NHDOT DRIVEWAY PERMIT
R4	4-09-15	POST-APPLICATION TECHNICAL REVISIONS

RAIN GARDEN #2 DETAIL
LAND OF
21 FARMINGTON ROAD LLC
21 FARMINGTON ROAD, ROUTE 11
ROCHESTER, NH 03867
TAX MAP 216, LOT 29

BERRY SURVEYING & ENGINEERING
335 SECOND CROWN POINT ROAD
BARRINGTON, NH 03825 (332-2863)

SCALE : AS NOTED
DATE : MARCH 30, 2015
FILE NO. : DB 2014-149

STATE OF NEW HAMPSHIRE
KENNETH A. BERRY
No. 14243
LICENSED
PROFESSIONAL ENGINEER